AX10 SCORPION

1/10 Competition Rock Crawler

CarTechX
A WEBSITE FOR THE SERIOUS RACER

axial™

AX10 SCORPION

1/10 Competition Rock Crawler

CAUTIONS

To prevent serious personal injury and/or property damage, operate all remotely controlled models in a responsible manner as outlined herein.

CHOOSE THE RIGHT PLACE TO OPERATE YOUR R/C MODEL.

- Do not run on public streets or highways. This could cause serious accidents, personal injuries, and/or property damage.
- Never run R/C models near people or animals.
- To avoid injury, do not run in confined spaces.
- Do not run where loud noises can disturb others, such as hospitals and residential areas.
- Never run indoors. There is a high risk of fire and/or damage.

INSPECT YOUR MODEL BEFORE OPERATION.

- Make sure that all screws and nuts are properly tightened. It is also a good idea to use removable thread lock wherever metal screws go into metal, especially for engine mounts and the engine pilot shaft.
- Always use fresh batteries for your transmitter and for your receiver to avoid losing control of the model.
- Always test the brakes and throttle before starting your engine to avoid losing control of the model.
- Make sure no one else is using the same radio frequency as you are using.

AFTER OPERATION OF YOUR R/C MODEL

- Turn off receiver first, then turn off transmitter, this will prevent runaways.
- Be careful when handling batteries, they will be hot after running.
- Replace any batteries that have been dented or have frayed wires, short circuits can cause fire.
- Be sure to keep your R/C model clean and free of excess dirt and grease, this will increase the life.

VORSICHT!

Um Verletzungen an Personen und/oder Sachschäden zu vermeiden, sollten alle ferngesteuerten Modelle sorgfältig und verantwortungsbewusst bedient werden,wie nachfolgend beschrieben.

Wählen Sie den richtigen Platz zum Fahren

- Fahren Sie niemals auf öffentlichen Straßen. Dies könnte Verkehrsunfälle, Personen schäden oder Sachschäden verursachen.
- Fahren Sie niemals in der Nähe von anderen Personen oder Tieren.
- Fahren Sie niemals auf belebten Straßen.
- Fahren Sie nie in der Nähe von Wohnhäusern oder Krankenhäusern. Der Lärm könnte andere Personen stören.
- Fahren Sie niemals in Innenräumen. Dort könnte etwas beschädigt werden.

Überprüfen Sie Ihr Modell, bevor Sie es in Betrieb nehmen.

- Gehen Sie sicher, dass alle Schrauben und Muttern festgezogen sind. Verwenden Sie überall dort Schrauben-Sicherungslack, wo Metallschrauben in ein Metallgewinde greifen, besonders bei den Motorhaltern.
- Um Störungen zu vermeiden, benutzen Sie immer voll geladene Akkus in Ihrem Sender und Empfänger.
- Bevor Sie den Motor starten, sollten Sie immer die Funktion der Bremse und des Gashebels testen.
- Gehen Sie sicher, dass niemand mit der gleichen Frequenz fährt wie Sie.

Nach Betrieb des RC Modells:

- Zuerst den Empfänger abdrehen, dann den Sender abdrehen um unkontrolliertes Durchgehen zu vermeiden.
- Seien Sie vorsichtig mit gebrauchten Akkus, sie können nach dem Gebrauch heiß sein.
- Ersetzten Sie Akkus/Batterien die beschädigt sind oder schadhafte Kabel aufweisen, sie können Kurzschlüsse oder Feuer verursachen.
- Halten Sie Ihr Fahrzeug sauber und entfernen Sie Schmutz und Schmierfett, damit erhöhen Sie die Lebensdauer Ihres Modells.

PRECAUTIONS

Afin d'éviter toutes blessures corporelles et/ou dommages environnants, veuillez procéder en toute responsabilité comme indiqué ci-dessous

Choisir le lieu adéquat pour faire rouler votre modèle.

- Ne jamais rouler dans les rues ou sur les routes ouvertes au publique. Ceci peut provoquer de graves accidents.
- Ne jamais rouler près de personnes ou d'animaux.
- Pour éviter les blessures, ne pas rouler dans des espaces confinés.
- Ne jamais rouler où le bruit peut déranger, comme aux abords des hôpitaux ou des quartiersrésidentiels.
- Ne jamais rouler à l'intérieur: les gaz d'échappement sont nocifs.

Controler votre modèle avant chaque utilisation.

- Vérifier que les vis et les écrour sont bien serrés. Il est trés fortement conseillé d'utiliser du frein filet pour bloquer les vis qui sont en contact avec du métal et tout particulierer ment les vis du moteur.
- Toujours utiliser des batteries bien chargées pour l'émission et la réception.
- Toujours vérifier les freins et la commande des gaz avant de démarrer.
- Vérifier qu'aucune autre personne n'utilise votre fréquence radio.

Après l'Opération De Votre Modèle de R/C

- Le virage du récepteur premier, alors virage de l'émetteur, ceci empêchera des fugitifs.
- Faire attention en contrôlant des piles, ils auront chaud après avoir couru.
- Remplacer n'importe quelles piles qui ont été cabossées ou a éraillé des fils, les court-circuits peuvent causer le feu.
- Etre sûr de garder votre modèle de R/C nettoie et libère de terre et la graisse supplémen taires, ceci augmentera la vie.

competitionX FOR THE SERIOUS RACER

Equipment needed / Benötigtes Zubehör / Equipement nécessaire

Radio Gear / Fernsteueranlage / Equipement Radio

Radio control system

- You will need a 2-Channel radio system with one servo, receiver, an electronic speed control with an ON/OFF switch.

Fernsteueranlage

- Sie werden ein 2-Kanal Radio System mit einem Servo, Empfänger, eine elektronische Geschwindigkeitsteuerung mit einem Netzschalter brauchen.

Ensemble radiocommande

- Vous aurez besoin d'un système de radio de 2 Chaînes avec un servo, le récepteur, un contrôle de vitesse électronique avec un interrupteur (on-off).

- 8AA Alkaline Dry Batteries.
- 8 St. AA Trockenbatterien.
- 8 piles type R6 pour votre radio commande.

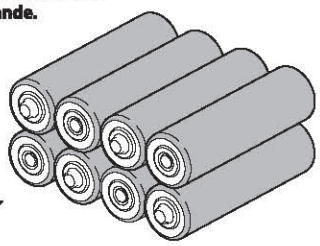

8x

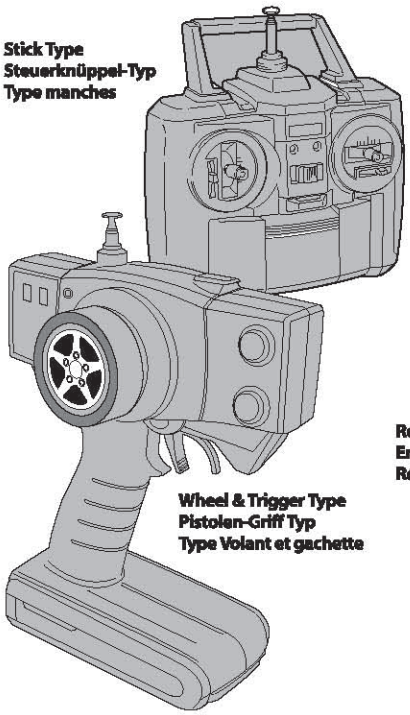

Stick Type
Steuerknüppel-Typ
Type manches

Wheel & Trigger Type
Pistolen-Griff Typ
Type Volant et gachette

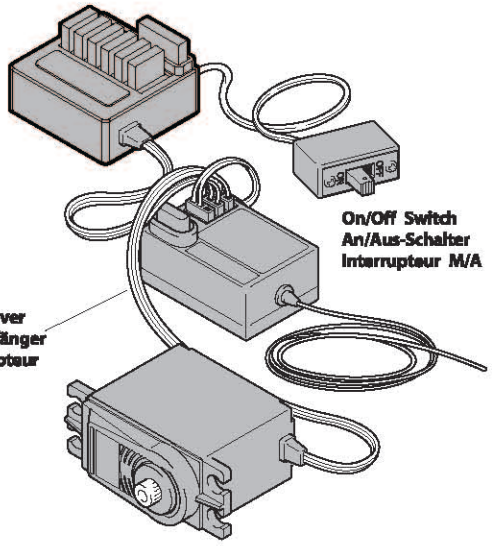

Electronic Speed Control
Elektrrischer Fahrtenregler
Contrôleur de Vitesse électronique

On/Off Switch
An/Aus-Schalter
Interrupteur M/A

Receiver
Empfänger
Récepteur

Steering servo
Lenkservo
Servo de direction

Motor / Motoren / Moteur

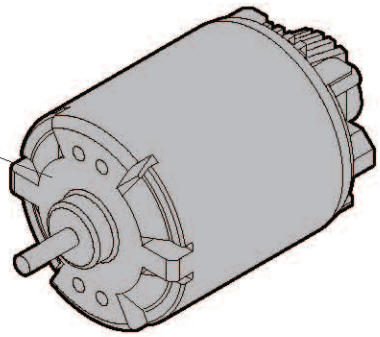

540 Size - 55T

Battery / Akku / Batterie

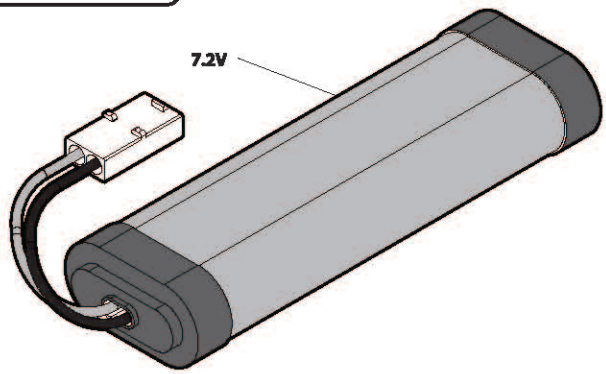

7.2V

Tools Recommended / Benötigte Werkzeuge / Outillage

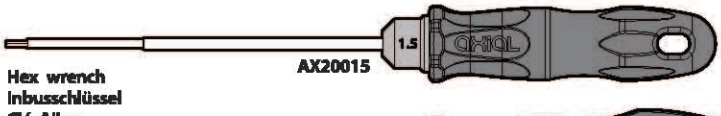

Hex wrench
Inbusschlüssel
Clé Allen

AX20015

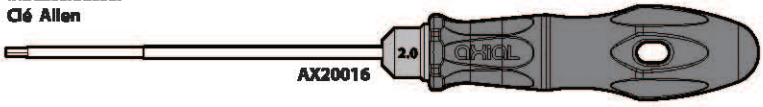

AX20016

AX20017

⊕Screwdriver (large)
⊕Schraubenzieher (gross)
Tournevis ⊕ (gros)

AX20045

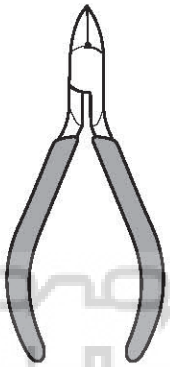

Side cutter
Seitenschneider
Pinces coupantes

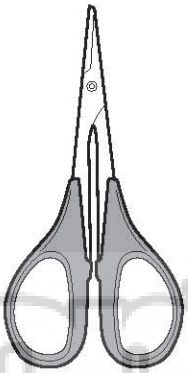

Curved scissors
Schere
Ciseaux

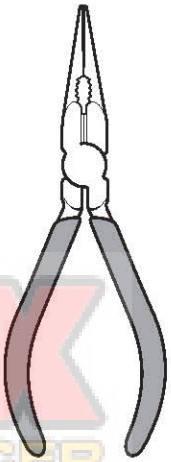

Long nose pliers
Flachzange
Pinces à becs longs

Modeling knife
Modellermesser
Couteau de modéliste

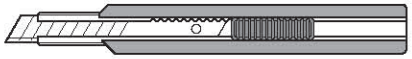

competitionX
WEB SITE FOR THE SERIOUS RACER

Batteries / Batterien / Piles

Optional Battery Mounting

The standard 7.2V stick pack can be mounted on the battery/radio tray as shown in the instructions. However this is not the most ideal mounting place for competitive rock crawling since it places most of the weight higher in the chassis. You can also use smaller packs (LiPo, Lithium Ion, receiver packs, etc.) that offer a much lower weight. Ideally you want the bulk of the weight to be over the front axle. If you plan on competing or simply want to improve the performance of your AX10 Scorpion it is recommended to relocate your batteries over the front axle. You can mount the battery pack on top of the steering servo using Velcro, plastic zip ties, or strapping tape. You can also mount the battery pack using the optional AX10 Scorpion Battery/Servo Plate (AX30486) as shown.

Optionale Akkubefestigung

Der normale 7,2V Stick Pack kann wie beschrieben auf die Elektronik Grundplatte montiert werden. Diese Position ist nicht der idealste Ort, da das Gewicht höher als das Chassis ist. Sie können auch kleinere Packs verwenden (LiPo, Lithium Ion, Empfängerpacks...) die leichter sind. Im Idealfall kommt das Gewicht über die Vorderachse. Wenn Sie ein Rennen mitfahren, oder die Leistung Ihres Wagens optimieren wollen wird empfohlen, die Akkus über die Vorderachse zu montieren. Sie können den Akkupack auf dem Lenkservo mit Klettverschluss, Kabelbinder oder Klebeband montieren. Sie können auch den Akku mit dem Option Part AX30486 nach Bedarf montieren.

Monter facultatif de Pile

Le standard 7.2V tas de baton peut être monté sur le plateau de pile/radio selon les instructions. Cependant ceci n'est pas l'endroit montant le plus idéal pour ramper de rocher compétitif puisque Il place la plupart du poids plus haut dans le châssis. Vous pouvez utiliser aussi de plus petits tas (LiPo, flon de Lithium, les tas de récepteur, etc.) cela offre un abaisse beaucoup le poids. Idéalement vous voulez que la masse du poids pour ait été par-dessus l'essieu avant. Si vous planifiez sur concourir ou simplement le besoin pour améliorer l'exécution de votre AX10 Scorpion qu'il est recommandé reloger vos piles par-dessus l'essieu avant. Vous pouvez monter le tas de pile sur la direction le Velcro d'utilisation servo, la fermeture éclair en plastique Ile, ou sangler la bande. Vous pouvez monter aussi le tas de pile utilisant le facultatif AX10 Scorpion Plaque Pile/Servo (AX30486) comme indiqué.

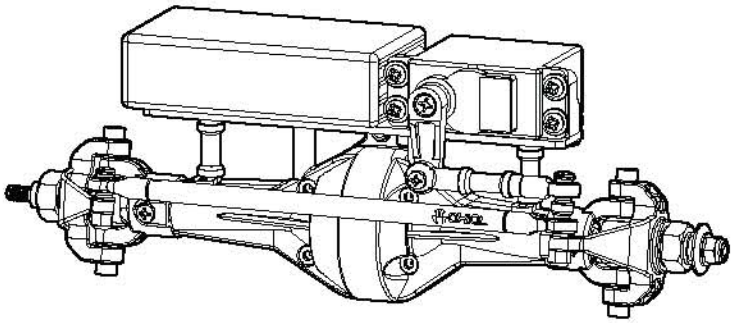

MaxAmps.com
High Performance RC
visit www.maxamps.com for a complete selection of batteries and chargers specifically for the AX10 Scorpion.

Wheels - Tires / Räder - Ermüdet / Les roues - Fatigue

The AX10 Scorpion is set up to be competitive right out of the box, however terrain, weather and driving style all affect the performance of the chassis. You can fine tune performance of your AX10 Scorpion by adding weight, trimming the inner foam, and tuning your tires.

Der AX10 Skorpion ist konstruiert, um aus der Schachtel konkurenzfähig zu sein, jedoch beeinflussen Gelände, Wetter und Fahrstil die Leistung vom Chassis. Sie können die Leistung Ihres AX10 Skorpion durch hinzufügen von Gewichten, Trimmen der Reifeneinlage und der Reifenabstimmung einstellen.

Le AX10 Scorpion s'est établi pour être la droite compétitif de la boîte, cependant le terrain, le temps et la conduite conçoivent tout affecte l'exécution du châssis. Vous pouvez condamner à une amende l'exécution d'air de votre AX10 Scorpion en ajoutant le poids, taillant la mousse intérieure, et l'accordement de vos pneus.

Adding Weight / Addiergewicht / Poids ajoutant

You can add weight to the front axle to improve traction. Most users will use stick on wheel weights that fit inside the tire and mount to the wheel, but you can also use Airsoft pellets or BB's. You will have to experiment to determine how much weight to add.

Sie können an der Vorderachse Gewicht hinzufügen um die Traktion zu verbessern. Die meisten Fahrer verwenden Aufsteckbare Rädergewichte die innerhalb des Reifens montiert werden, Sie können aber auch Airsoft Kugeln oder BB's verwenden. Sie werden experimentieren müssen, um zu bestimmen, wieviel Gewicht Sie hinzufügen müssen.

Vous pouvez ajouter le poids à l'essieu avant pour améliorer la traction. La plupart des utilisateurs utiliseront le baton sur les poids de roue qui capable dans le pneu et le mont à la roue, mais vous pouvez utiliser aussi les boulettes de Airsoft ou BB. Vous aurez à expérimenter pour déterminer combien de peser pour ajouter.

Tire Flex / Reifen Flex / Le pneu Fléchit

You can adjust the amount of tire flex you get by trimming your inner foam. Visit www.rccrawler.com to see all the choices you have before trimming your inner foams.

Sie können die Eigenschaften des Reifens durch trimmen der Reifeneinlage ändern. Besuchen Sie www.rccrawler.com, um Möglichkeiten für diese Änderung zu sehen, bevor Sie die Einlage bearbeiten.

Vous pouvez ajuster la quantité de pneu fléchit vous obtient en taillant votre mousse intérieure. Www.rccrawler.com de visite pour voir tous les choix que vous avez avant de tailler vos mousses intérieures.

Standard ***Trimmed***

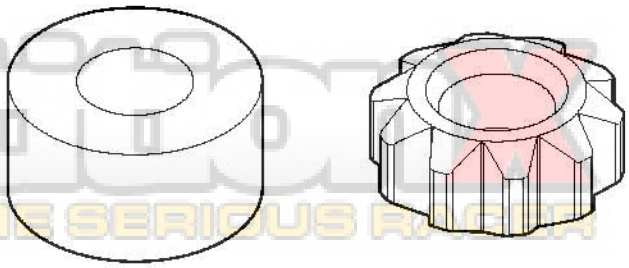

RCCrawler
A WEB SITE FOR THE SERIOUS RACER

Shock Absorbers / Dämpfer / Amortisseurs

Proper building, maintenance, and tuning of your shocks will enhance the performance of your AX10 Scorpion. Be sure to inspect the shocks regulary for any sign of wear or damag and replace parts as needed. Tune your shocks to enhance the performance of your AX10 Scorpion using the tips provided below.

Ordnungsgemäßer Zusammenbau, Wartung und Abstimmung der Dämpfer wird die Leistung Ihres AX10 Skorpion erhöhen. Prüfen Sie unbedingt regelmäßig die Dämpfer auf Verschleiß und ersetzen Sie die nötigen Teile. Stimmen Sie Ihre Dämpfer ab wie untenstehend beschrieben, um die Leistung des Wagens zu erhöhen.

Le bâtiment correct, l'entretien, et accordant de vos chocs améliorera l'exécution de votre AX10 Scorpion. Etre sûr d'inspecter le regulary de chocs pour n'importe quel signe d'usure ou damag et remplace des parties comme nécessaire. Accorder vos chocs pour améliorer l'exécution de votre AX10 Scorpion utilisant les pointes fournies au dessous.

Shock Oil / Dämpferöl / Huile pour amortisseaur

Thinner / Dünner / Plus fluide	Thicker / Dicker / Plus visqueuse
Softer damping More traction Quicker weight transfer	Stiffer damping Slower chassis weight transfer Reacts slower to input
Weichere Dämpfung Mehr Griff Schnellere gewichtsverlagerung	Härtere Dämpfung Langsamere Gewichtsverlagerung Auto reagiert langsamer auf Steuerbefehle
Amortissement plus doux Plus d'adhérence Transfert de masses du châssis plus rapide	Amortissement plus rigide Transfert de masses du châssis plus lente La volture répond plus lentement aux commandes

Shock Spring / Dämpferfeder / Ressort d'amortisseur

Softer / Welcher / Plus souple
More Chassis Roll
Mehr rollbewegung des chassis
Plus de roulis du châssis

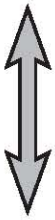

AX30213 Super Soft (Red)
AX30214 Soft (White)
AX30215 Medium (Green)
AX30216 Firm (Yellow)
AX30217 Super Firm (Blue)

Less Chassis Roll
Weniger rollbewegung des chassis
Moins de roulis du châssis
Thicker / Dicker / Plus visqueuse

Gear Ratio / Getriebeübersetzung / Rapports De Démultiplication

Use this equation to calculate the final drive ratio.
Final Drive Gear Ratio = 1 / ((pinion/Spur) X .13)

Mit dieser Gleichung können Sie die Gesamtübersetzung berechnen.
Gesamtübersetzung = 1 / ((pinion/Spur) X .13)

Utlisez cette equationpour calculer le rapport de transmission final
Rapport de transmission final = 1 / ((pinion/Spur) X .13)

Slower - More Torque
Langsamer - Mehr Kraft

73.85:1

15.38:1

Faster - Less Torque
Schneller - Weniger Kraft

48 Pitch

Pinion \ Spur	70	72	75	78	81	85	87	90	93	96
10								69.23	71.54	73.85
11								62.94	65.03	67.13
12							55.77	57.69	59.62	61.54
13							51.48	53.25	55.03	56.80
14						46.70	47.80	49.45	51.10	52.75
15						43.59	44.62	46.15	47.69	49.23
16						40.87	44.62	43.27	44.71	46.15
17						36.32	39.37	40.72	42.08	43.44
18					34.62	34.41	37.18	38.46	39.74	41.03
19					32.79	34.41	35.22	36.44	37.65	38.87
20					31.15	32.69	33.46	34.62	35.77	36.92
21				28.57	29.67	31.14	31.87	32.97	34.07	35.16
22				27.27	28.32	29.72	30.42	31.47	32.52	33.57
23				26.09	27.09	28.43	29.10	30.10	31.10	32.11
24			24.04	25.00	25.96	27.24	27.88	28.85	29.81	30.77
25			23.08	24.00	24.92	26.15	26.77	27.69	28.62	29.54
26			22.19	23.08	23.96	25.15	25.74	26.63	27.51	28.40
27		20.51	21.37	22.22	23.08	24.22	24.79	25.64	26.50	27.35
28		19.78	20.60	21.43	22.25	23.35	23.90	24.73	25.55	26.37
29	18.57	19.10	19.89	20.69	21.49	22.55	23.08	23.87	24.67	25.46
30	17.95	18.46	19.23	20.00	20.77	21.79	22.31	23.08	23.85	24.62
31	17.37	17.87	18.61	19.35	20.10	21.09	21.59	22.33	23.08	23.82
32	16.83	17.31	18.03	18.75	19.47	20.43	20.91	21.63	22.36	23.08
33	16.32	16.78	17.48	18.18	18.88	19.81	20.28	20.98	21.68	22.38
34	15.84	16.29	16.97	17.65	18.33	19.23	19.68	20.36	21.04	21.72
35	15.38	15.82	16.48	17.14	17.80	18.68	19.12	19.78	20.44	21.10

COMPETITION CRAWLER
A WEB SITE

AX30405
Input Shaft 5x28mm x1

AX30163
Pin 2x10mm x1

AXA1393
E2.5 e-clip x1

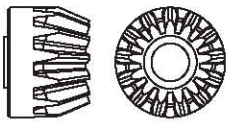

AX30392
13T Bevel Gear x1

1

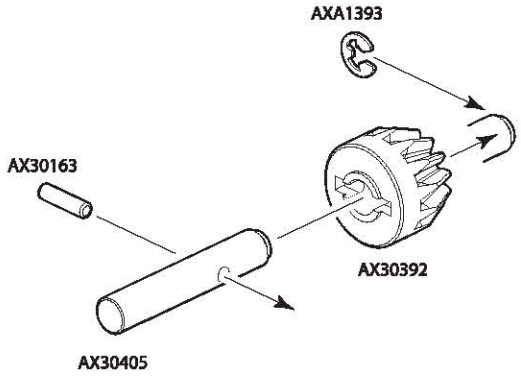

Option Parts

AX30395
Heavy Duty Bevel Gear Set

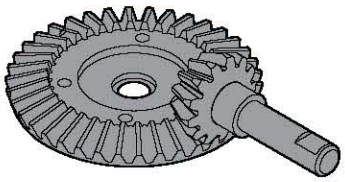

2

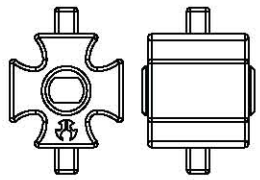

AX30500
Heavy Duty Locker x1

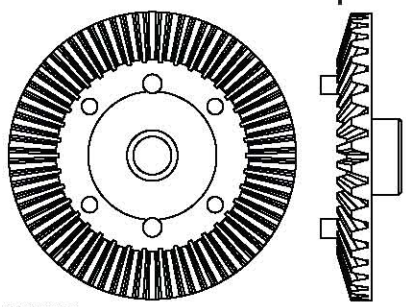

AX30392
38T Bevel Gear x1

AXA015
M2x10mm x4

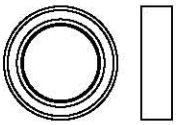

AXA1230
Bearing 10x15x4mm x2

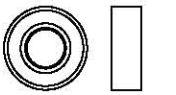

AXA1221
Bearing 5x11x4mm x2

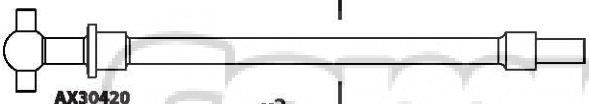

AX30420
Solid Axle Dogbone 6x74mm x2

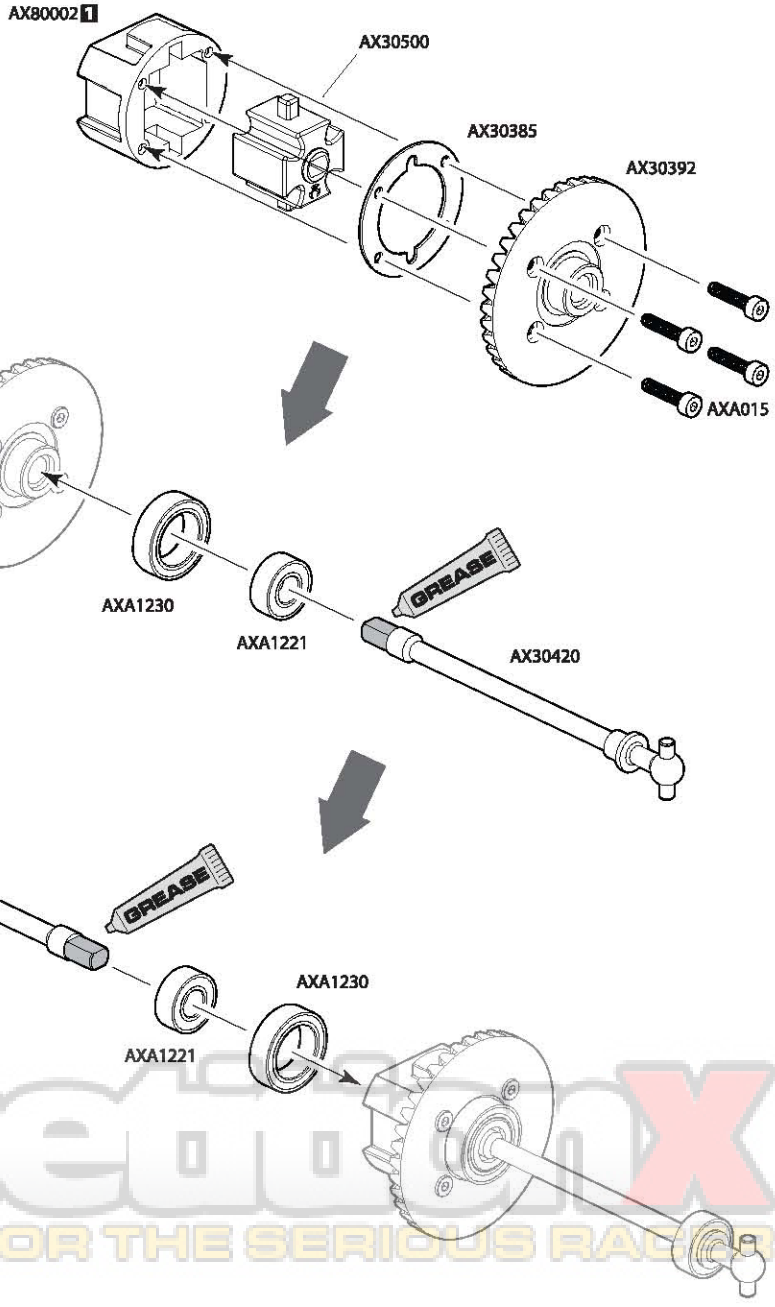

competitionX
A WEB SITE FOR THE SERIOUS RACER

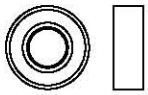

AXA1221
Bearing 5x11x4mm **x2**

AXA085
M3x10mm **x2**

AXA087
M3x16mm **x2**

AXA1040
M3 Thin Hex Nut **x2**

3

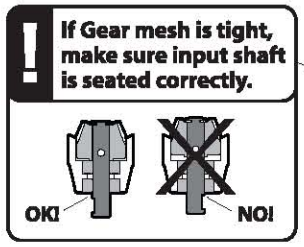

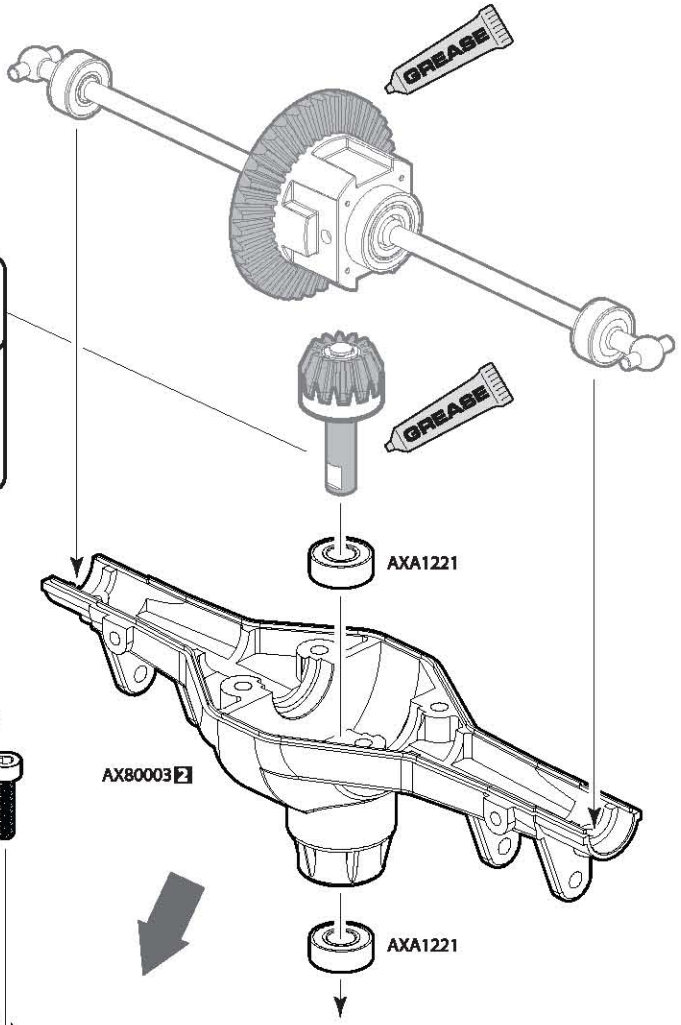

CompetitionX
A WEB SITE FOR THE SERIOUS RACER

AXA863
M3x6mm Tapping Binder Head **x4**

4

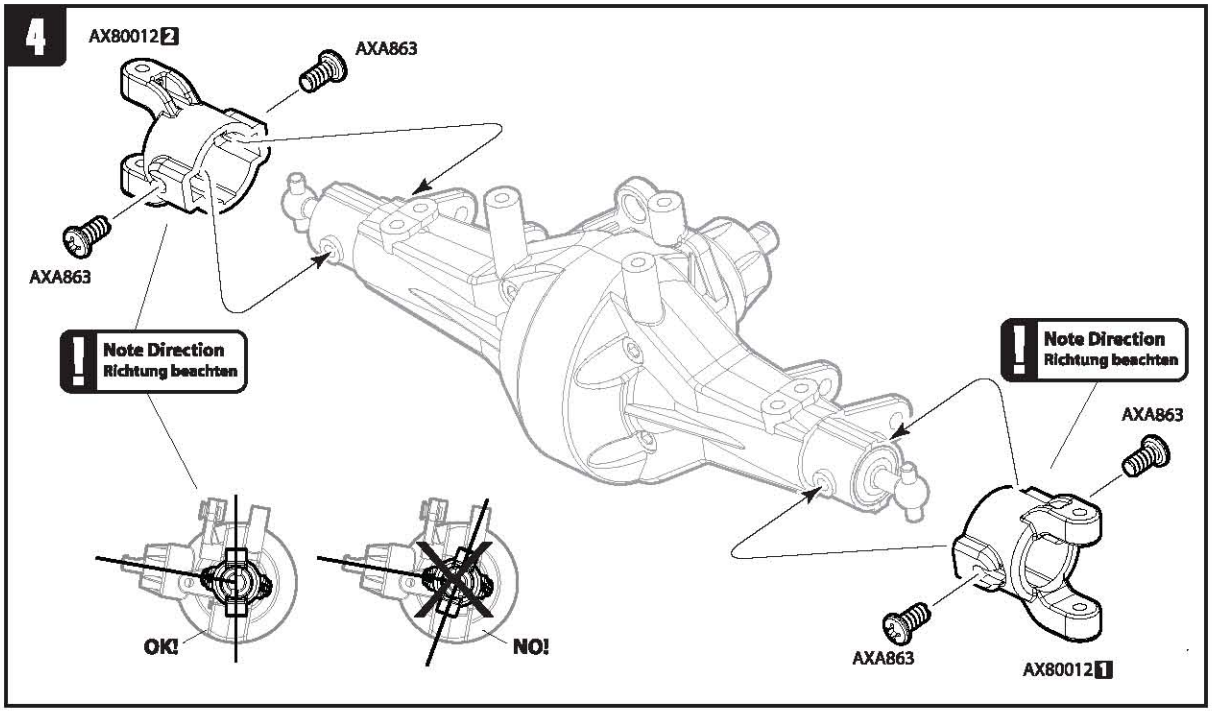

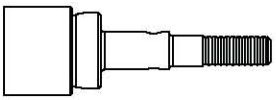

AX30366
Axle 5x35mm **x2**

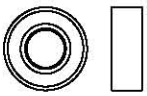

AXA1221
Bearing 5x11x4mm **x2**

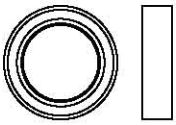

AXA1230
Bearing 10x15x4mm **x2**

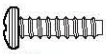

AXA865
M3x10mm Tapping Binder Head **x4**

AX30450
Flange Pipe 3x4.5x5.5 **x8**

5

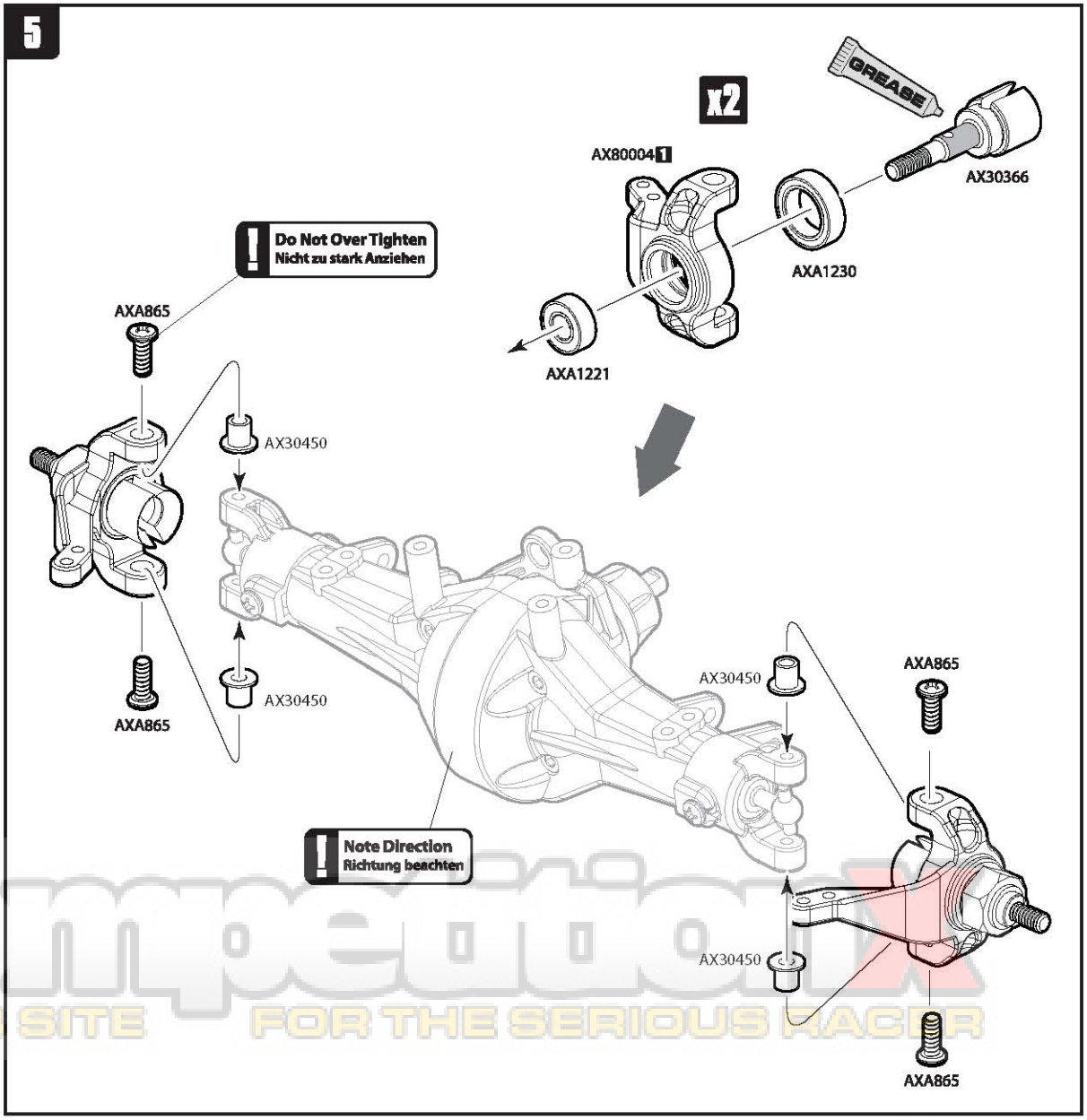

Competition
A WEB SITE FOR THE SERIOUS RACER

AX30405
Input Shaft 5x28mm **x1**

AX30163
Pin 2x10mm **x1**

AXA1393
E2.5 e-clip **x1**

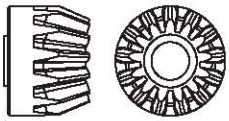

AX30392
13T Bevel Gear **x1**

6

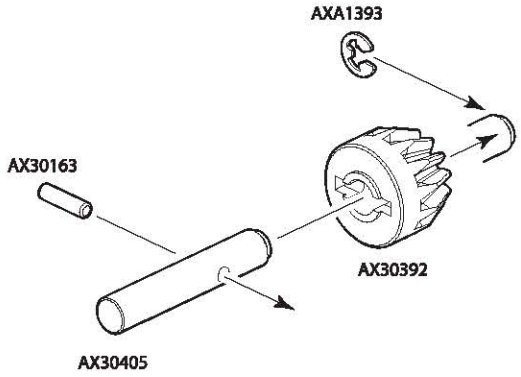

Option Parts

AX30395
Heavy Duty Bevel Gear Set

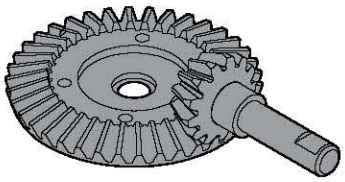

7

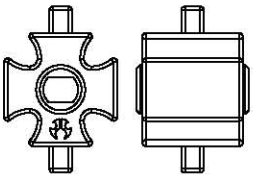

AX30500
Heavy Duty Locker **x1**

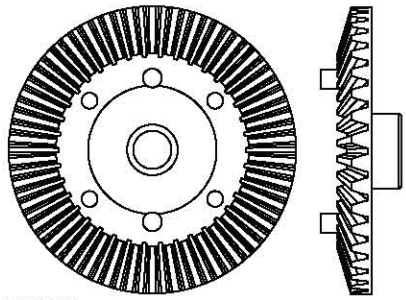

AX30392
38T Bevel Gear **x1**

AXA015
M2x10mm **x4**

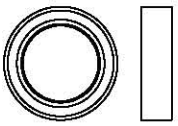

AXA1230
Bearing 10x15x4mm **x2**

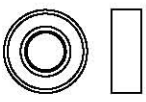

AXA1221
Bearing 5x11x4mm **x2**

AX30421
Solid Axle Dogbone 6x104.5mm **x2**

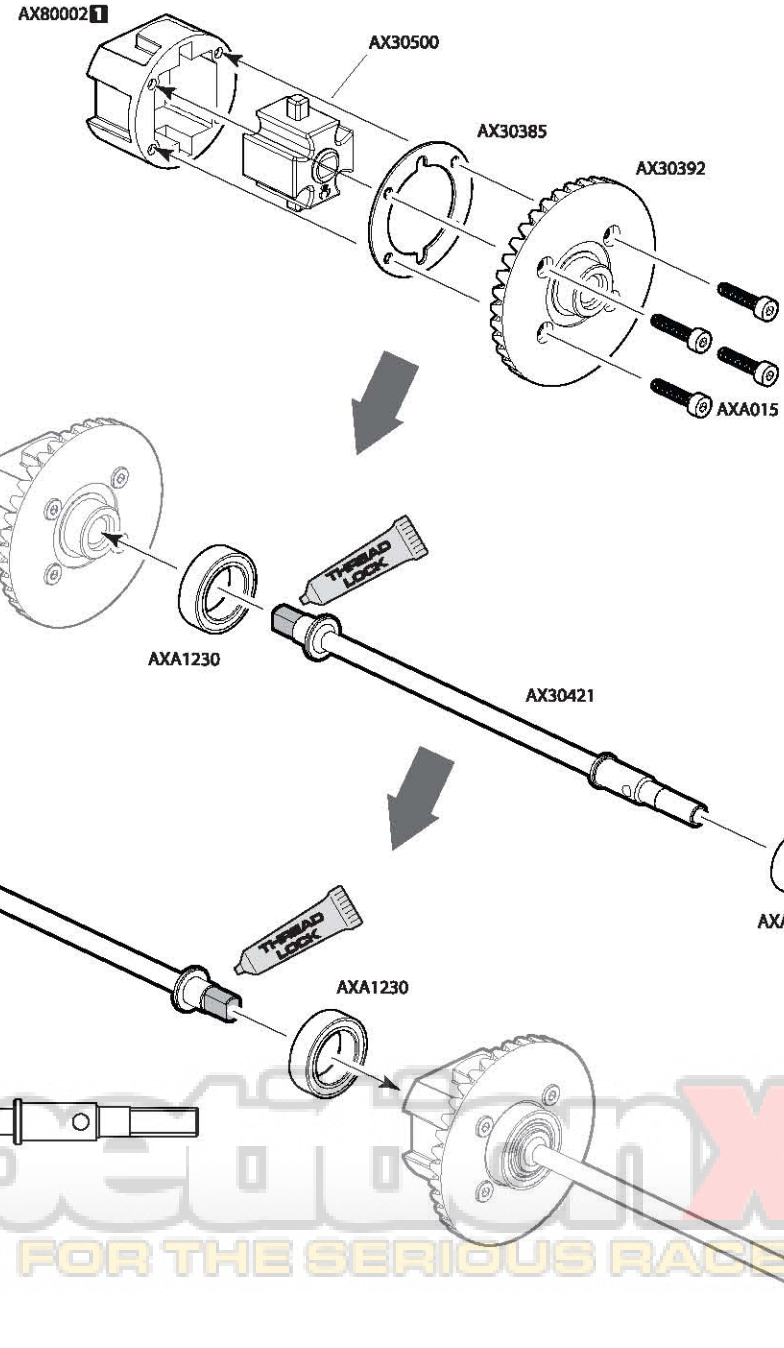

CompetitionX
A WEB SITE FOR THE SERIOUS RACER

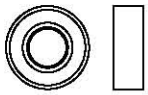

AXA1221
Bearing 5x11x4mm **x2**

AXA085
M3x10mm **x2**

AXA087
M3x16mm **x2**

AXA1040
M3 Thin Hex Nut **x2**

8

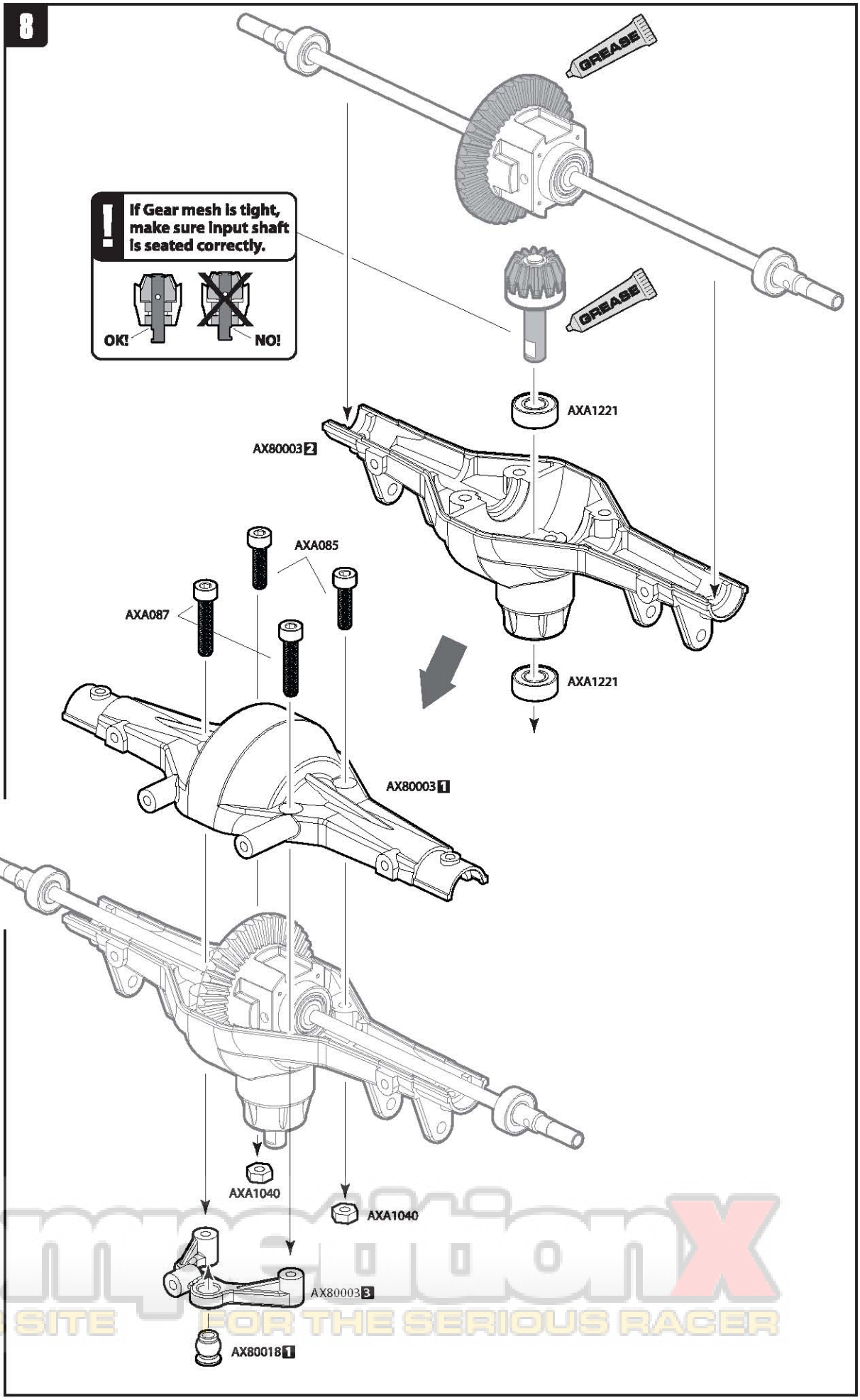

CompetitionX
A WEB SITE FOR THE SERIOUS RACER

AXA863
M3x6mm Tapping Binder Head x4

9

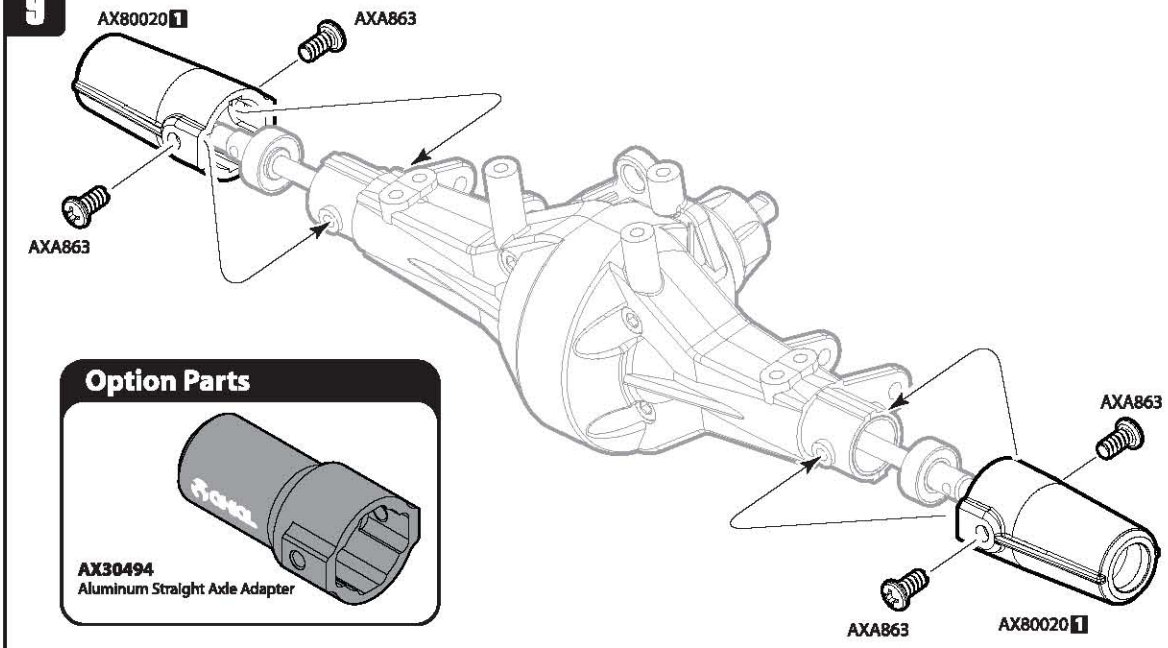

Option Parts

AX30494
Aluminum Straight Axle Adapter

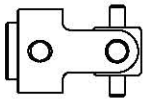

AX30380
Metal Driveshaft Yoke x4

10

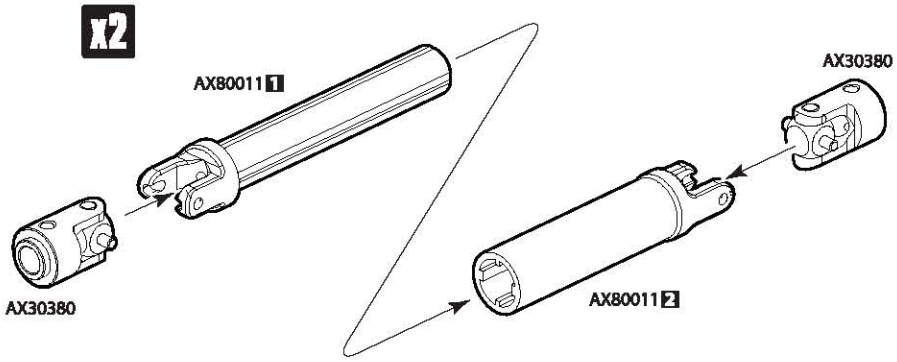

Option Parts

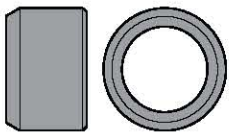

AX30501
Aluminum Drive Shaft Rings

11

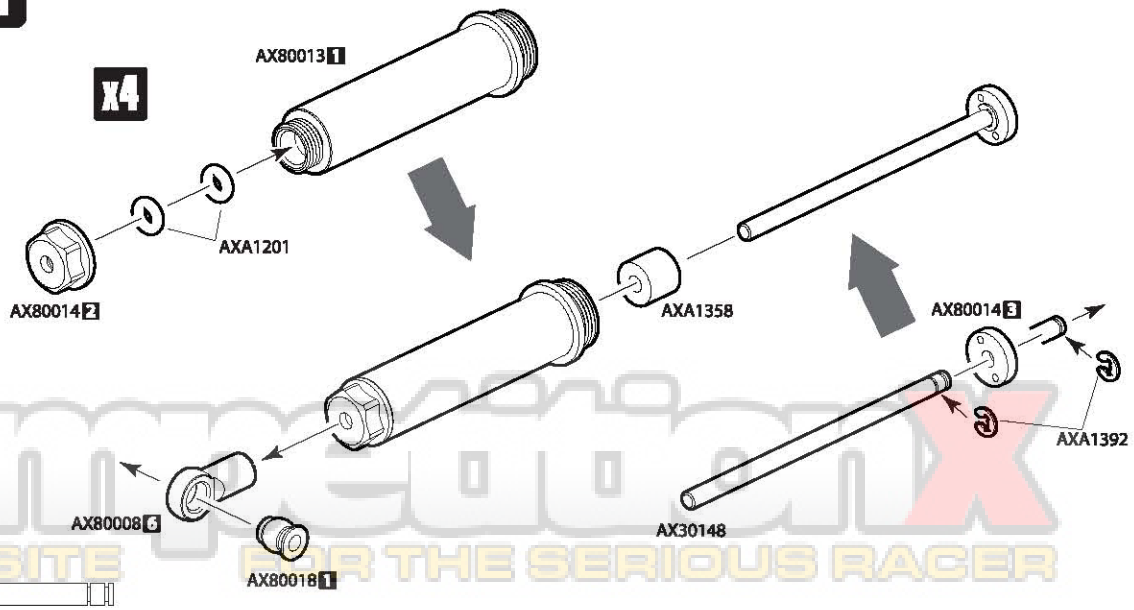

AXA1392 x8
E2 e-clip

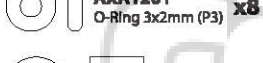

AXA1201 x8
O-Ring 3x2mm (P3)

AXA1358 x4
Shock Damper 3x7x8

AX30148 x4
Shock Shaft 3x64

competitionX
A WEB SITE FOR THE SERIOUS RACER

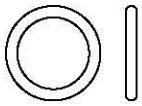

AXA1186
O-Ring 9.5x1.5mm (S10) x4

12

Make sure O-ring is fully seated inside plastic cap.

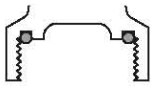

x4

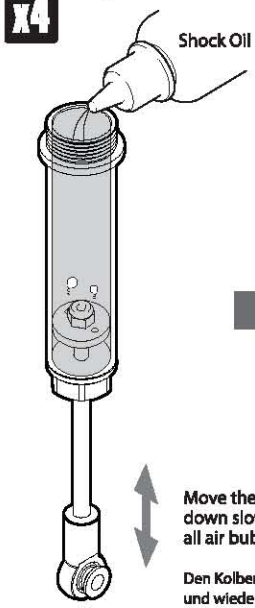

Move the shaft up and down slowly to remove all air bubbles.

Den Kolben langsam senken und wieder anheben, damit alle Luftblasen entfernt werden.

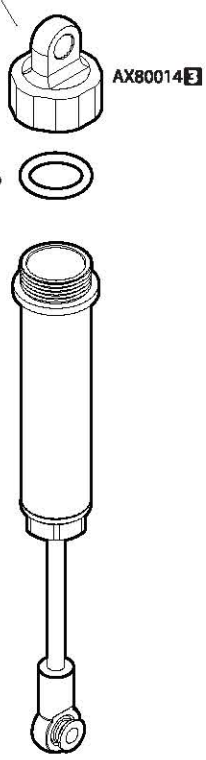

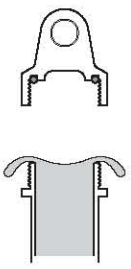

Wipe off excess oil with a rag

Überschuss mit einem Tuch entfernen.

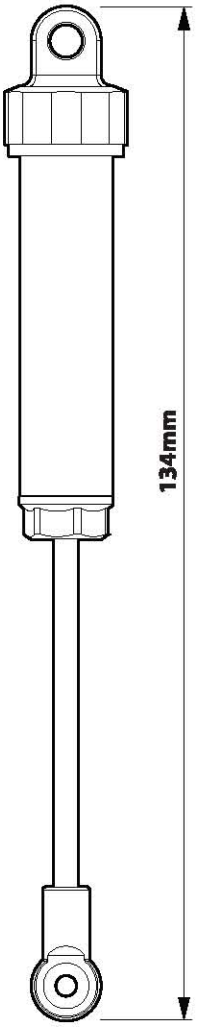

13

AX30217
Spring 14x90mm 3.01 lbs/in- Super Firm (Blue) x4

x4

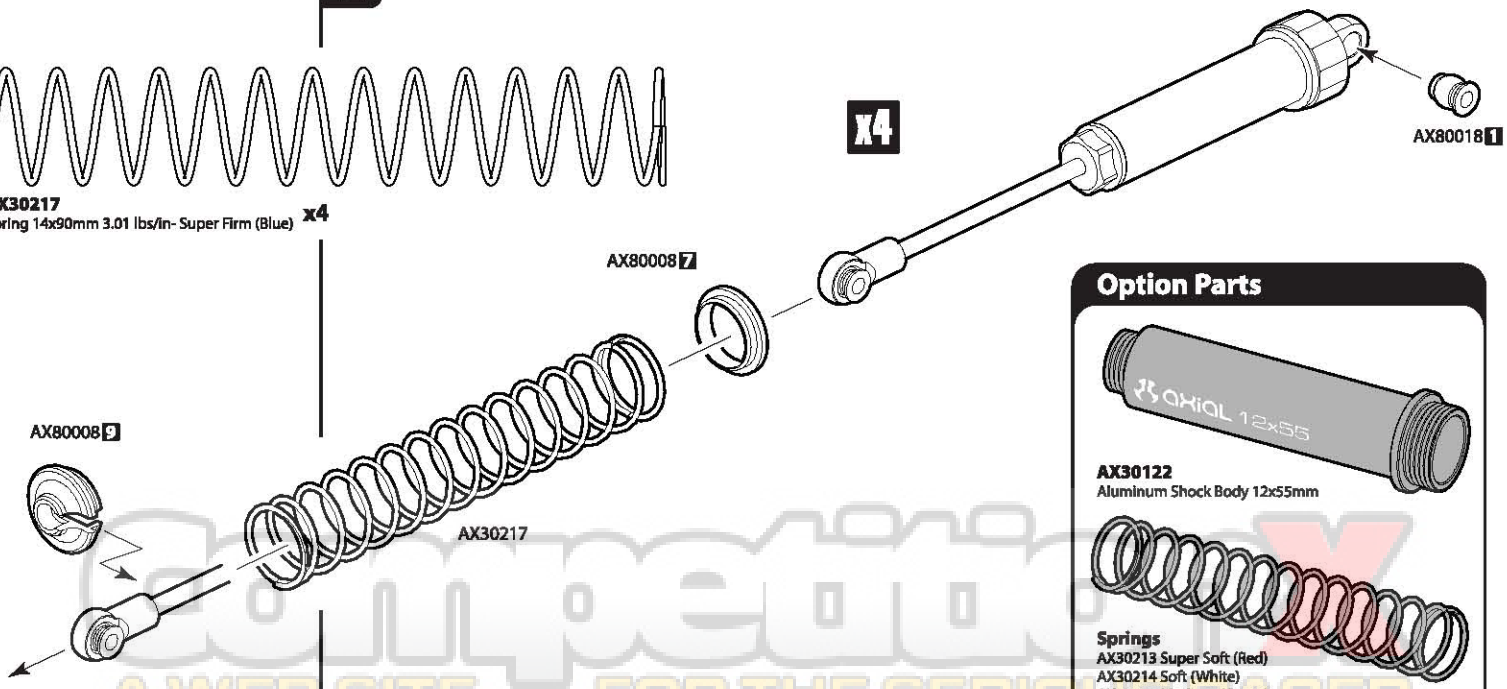

Option Parts

AX30122
Aluminum Shock Body 12x55mm

Springs
AX30213 Super Soft (Red)
AX30214 Soft (White)
AX30215 Medium (Green)
AX30216 Firm (Yellow)
AX30217 Super Firm (Blue)

competitionX
A WEB SITE FOR THE SERIOUS RACER

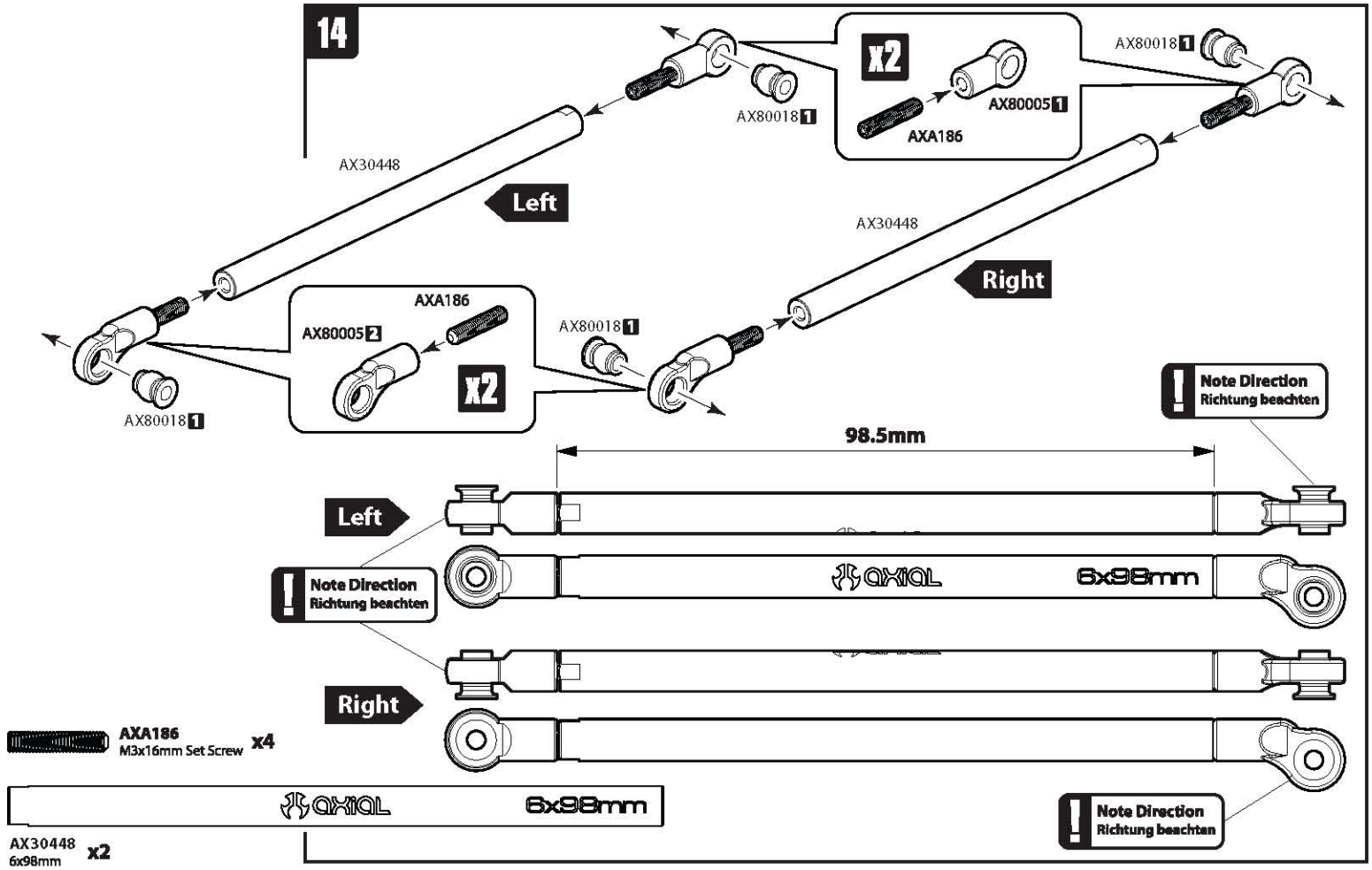

AX30448

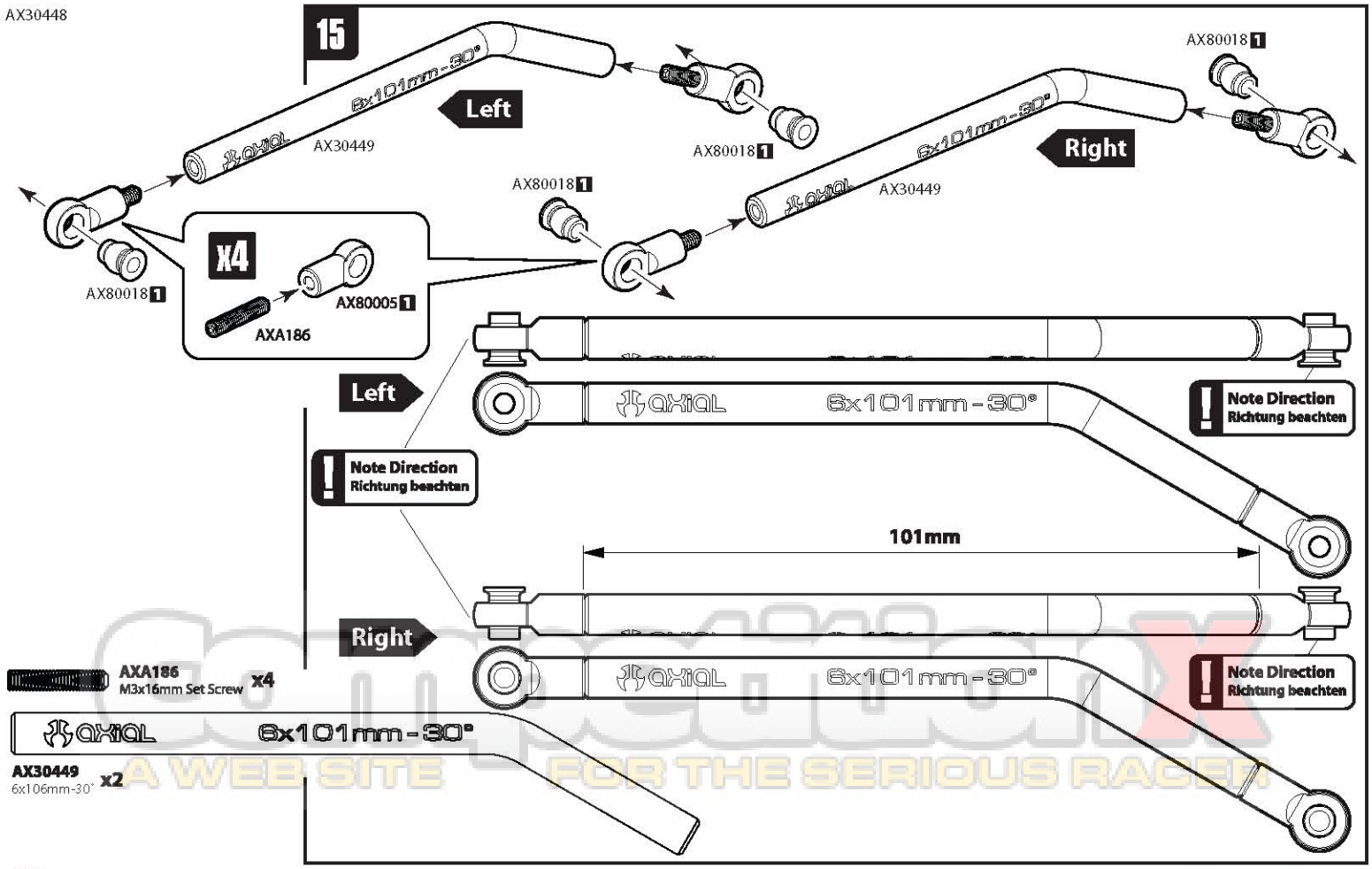

CollectorX
A WEB SITE FOR THE SERIOUS RACER

AXA186
M3x16mm Set Screw **x8**

AXA1403
7x55mm Post **x4**

16

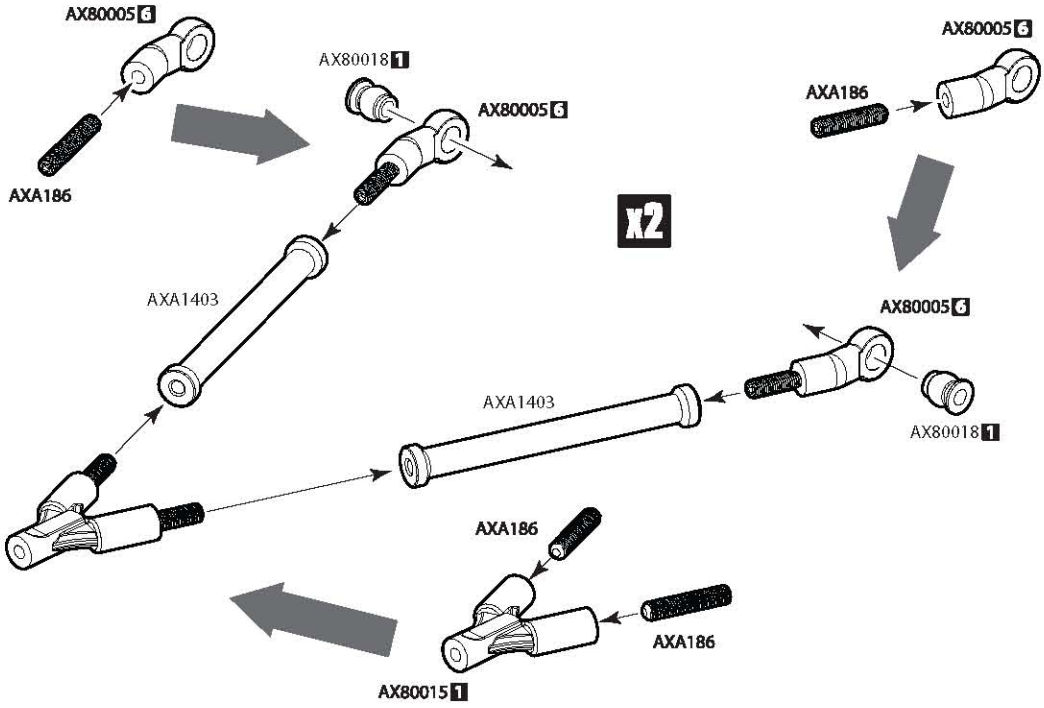

AXA180
M3x3mm Set Screw **x2**

AXA868
M3x18mm Tapping Binder Head **x2**

17

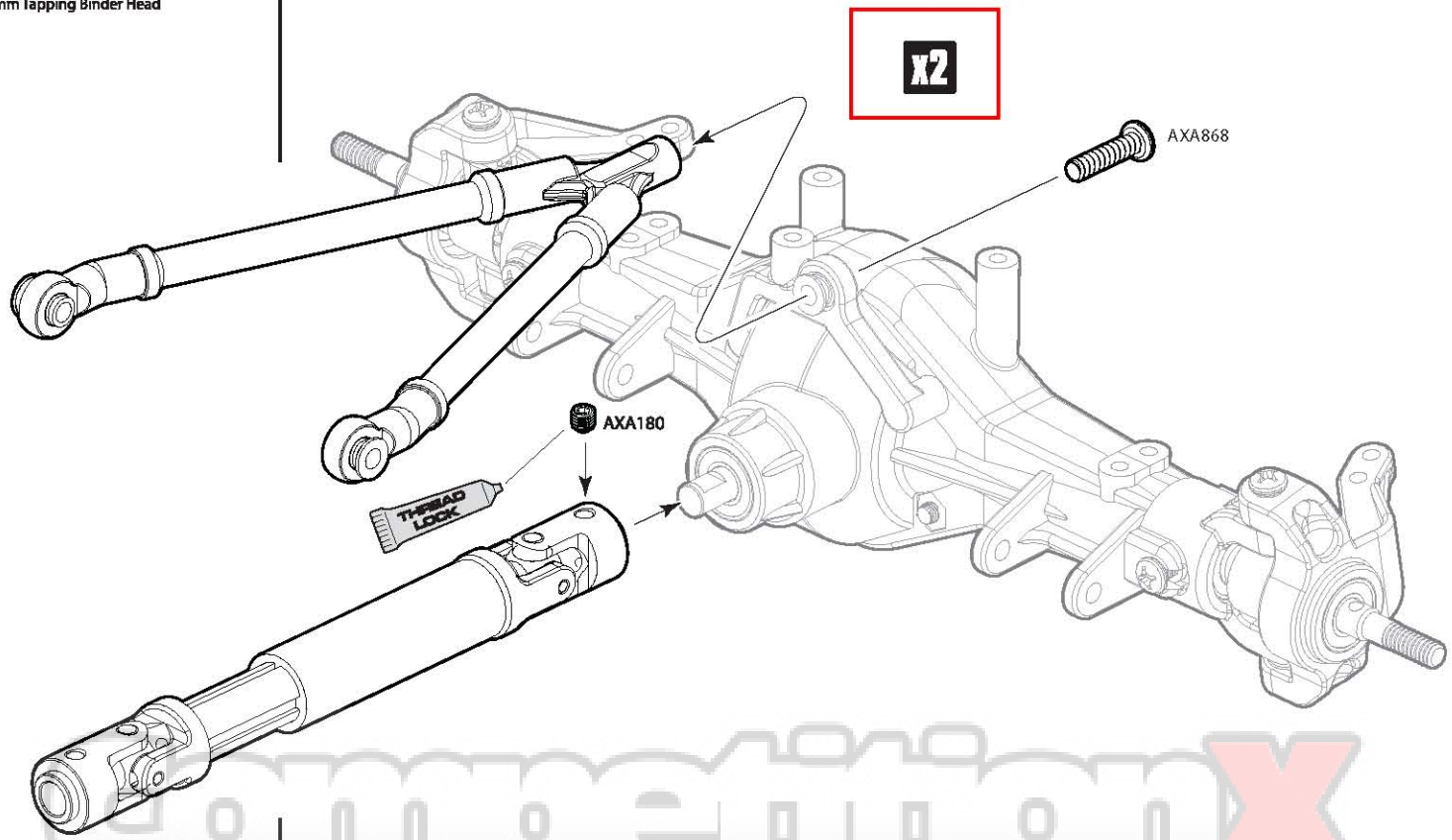

competitionX
A WEB SITE FOR THE SERIOUS RACER

AXA089
M3x25mm x4

18

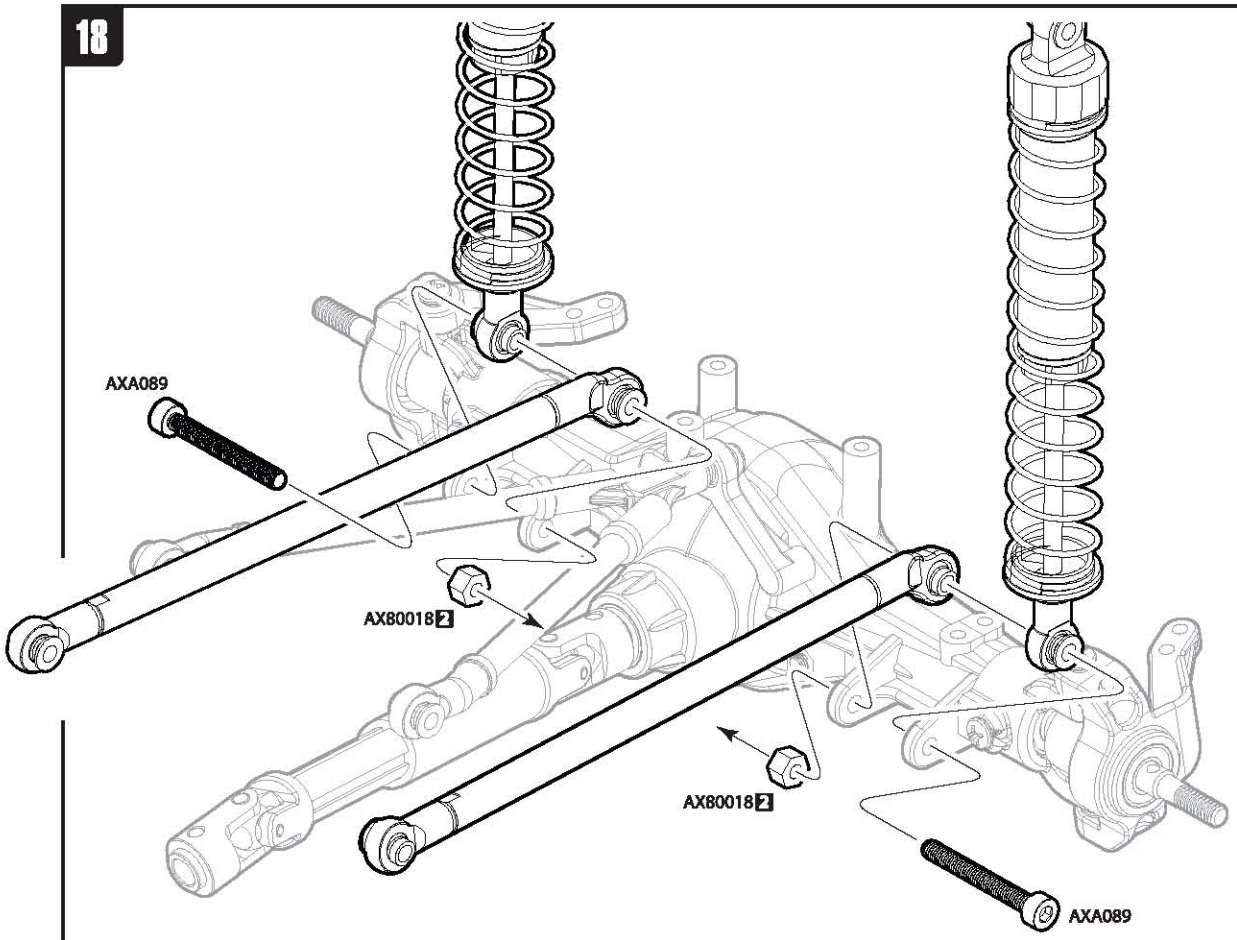

19

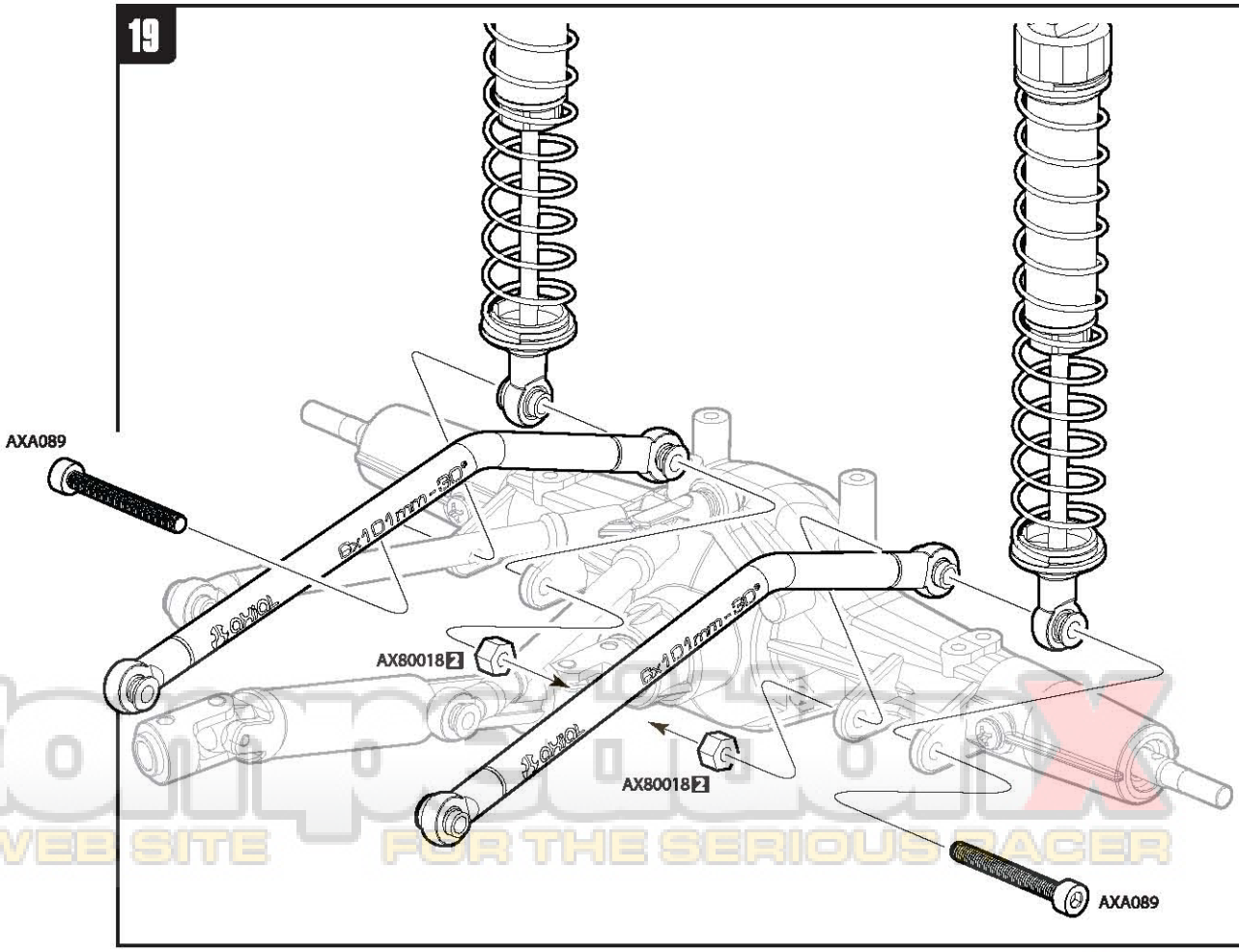

Competition RX
A WEB SITE FOR THE SERIOUS RACER

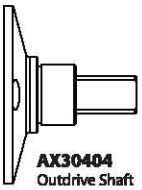

AX30404 Outdrive Shaft **x2**

AXA013 M2x6mm **x3**

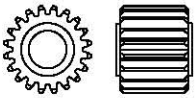

AX30394 20T Drive Gear **x1**

AX30162 Pin 1.5x8mm **x1**

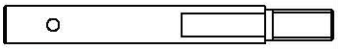

AX30197 Drive gear Shaft 5x43.5 **x1**

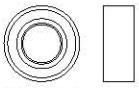

AXA1218 Bearing 5x10x4mm **x4**

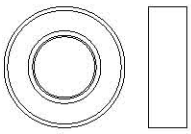

AXA1225 Bearing 8x16x5mm **x2**

AX30190 Shaft 5x18 **x1**

20

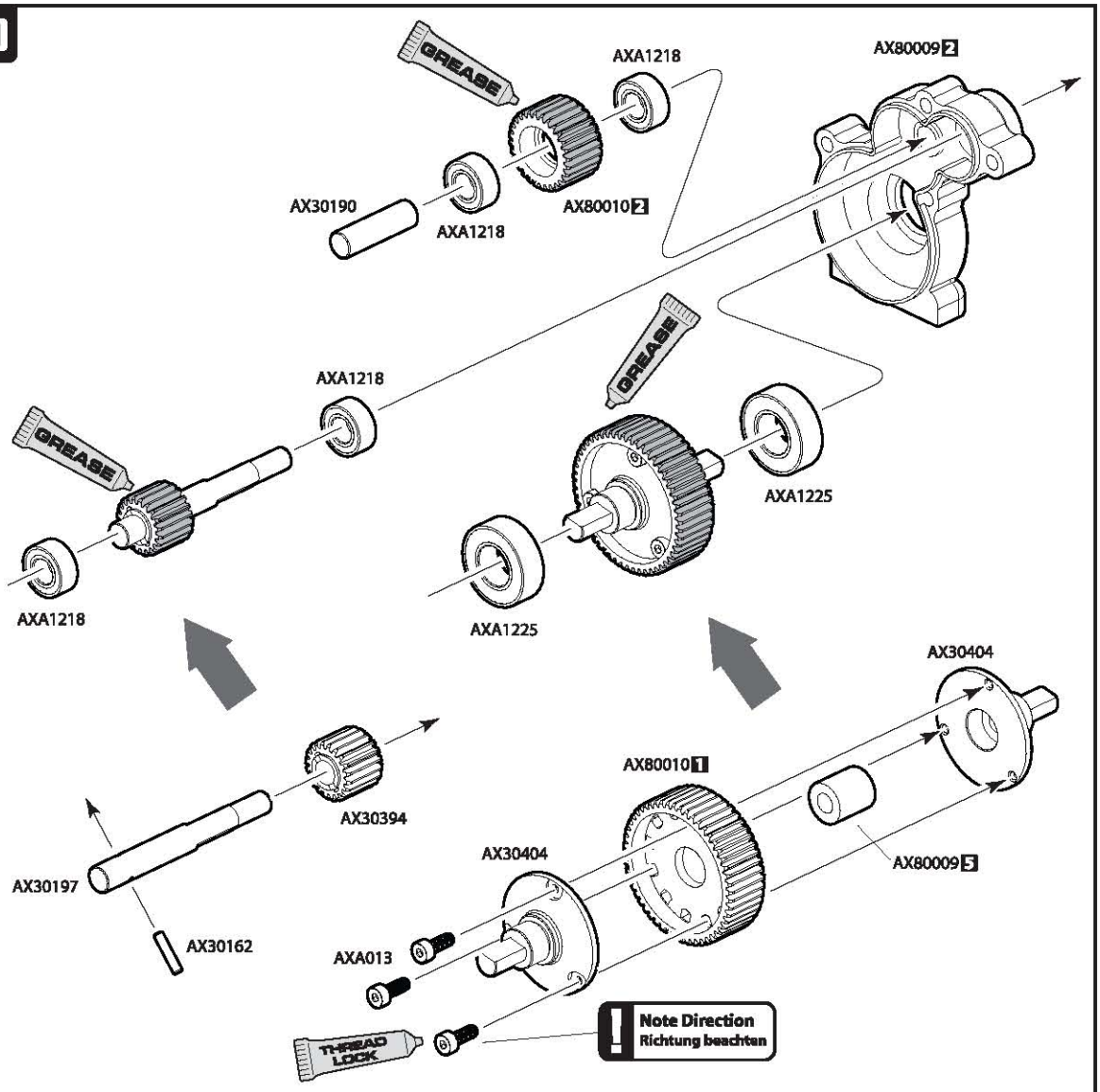

AXA088 M3x20mm **x1**

AXA1053 M3 Nylon Locking Hex Nut **x1**

21

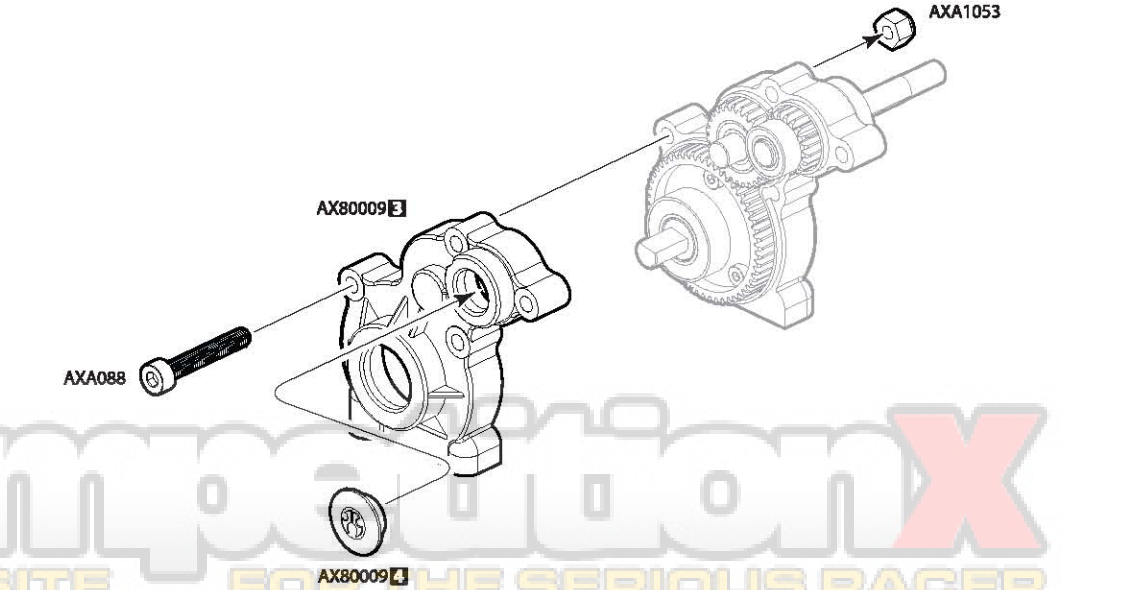

CompetitionX
A WEB SITE FOR THE SERIOUS RACER

AXA089 x3
M3x25mm

AX30484 x1
Transmission Spacer

AXA1327 x3
7.5x6mm Spacer

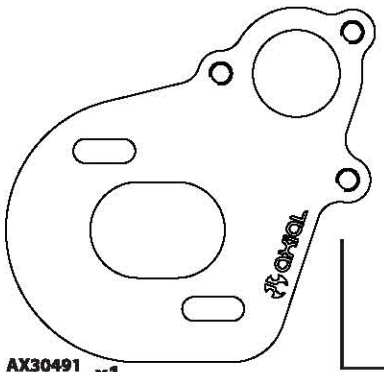

AX30491 x1
Motor Plate

22

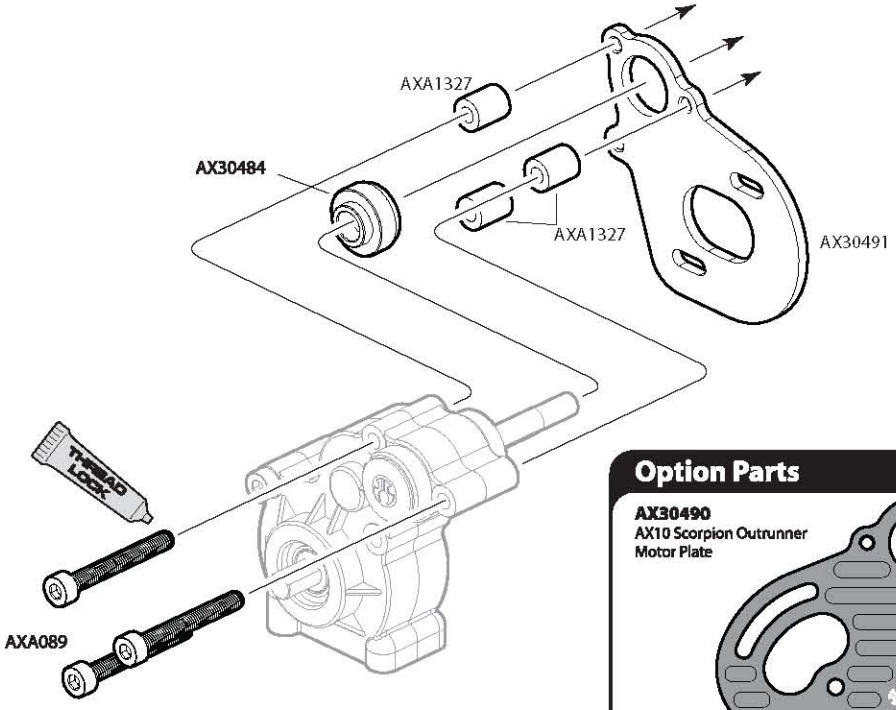

Option Parts

AX30490
AX10 Scorpion Outrunner Motor Plate

AXA084 x3
M3x8mm

AXA1070 x3
Washer 3x6x0.5

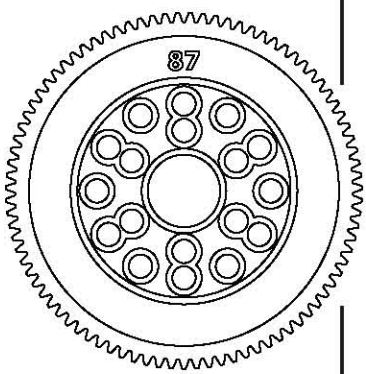

AX30672 x1
Spur 48DP 87T

AX1045 x1
M4 Nylon Lock Nut

AX1071 x2
Washer 4x8x0.5mm

AXA894 x2
M3x8mm Tapping Flat Head

AXA895 x2
M3x10mm Tapping Flat Head

AX30499 x1
5x6.9x4.8

23

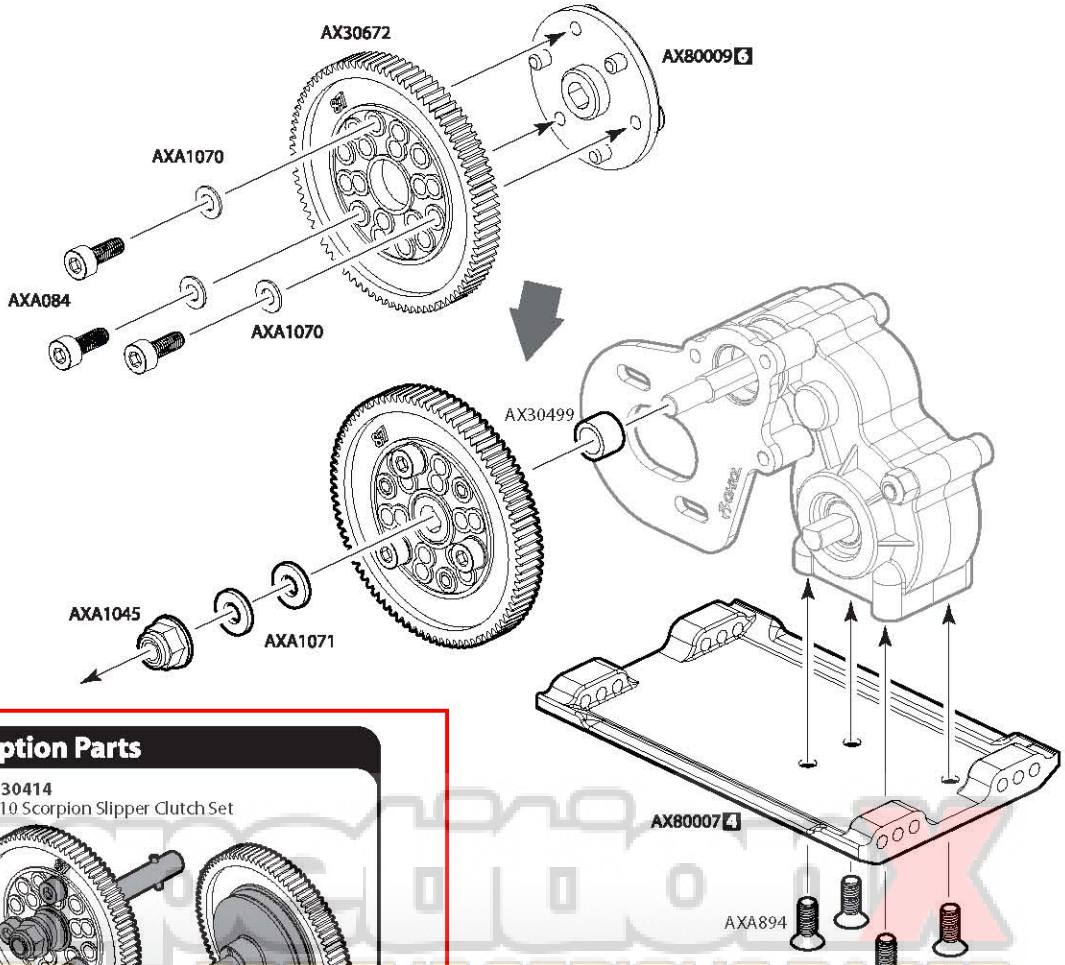

Option Parts

AX30414
AX10 Scorpion Slipper Clutch Set

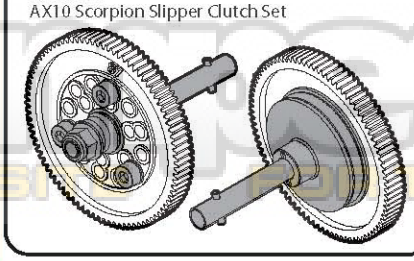

WEBSITE FOR THE SERIOUS RACER

AXA865
M3x10mm Tapping Binder Head **x4**

24

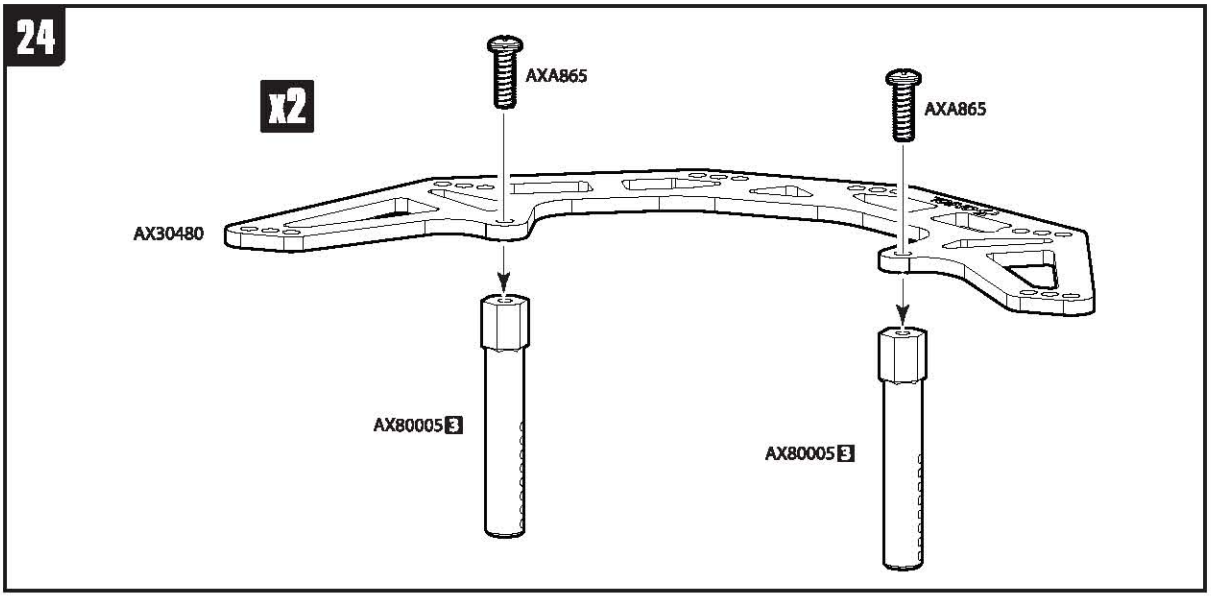

AXA867
M3x15mm Tapping Binder Head **x2**

AXA869
M3x20mm Tapping Binder Head **x2**

AXA1355
6x6mm Spacer **x2**

AXA180
M3x3mm Set Screw **x1**

25

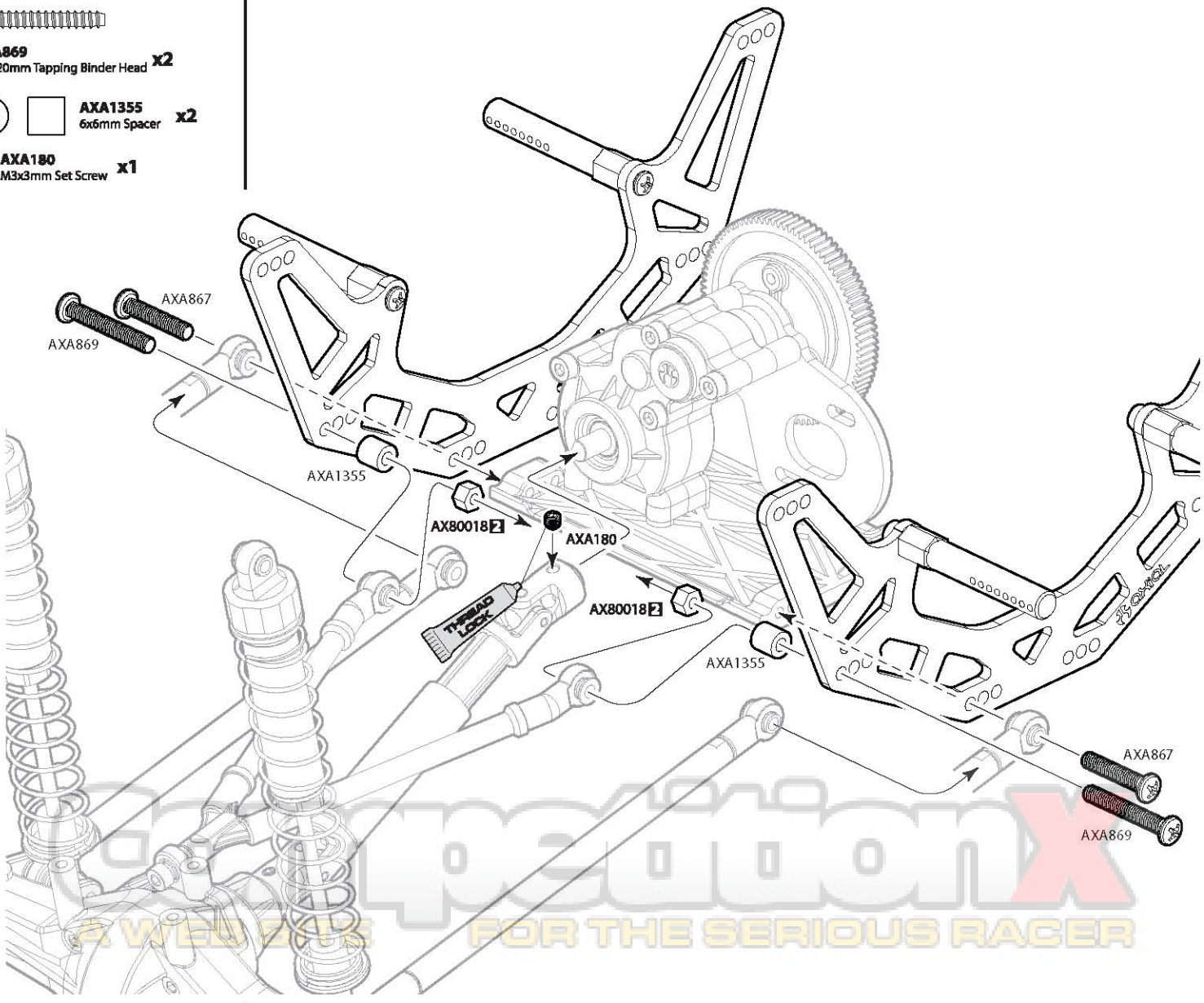

RCScrapbookX
A WEB SITE FOR THE SERIOUS RACER

AXA867
M3x15mm Tapping Binder Head x2

AXA869
M3x20mm Tapping Binder Head x2

AXA1355
6x6mm Spacer x2

AXA180
M3x3mm Set Screw x1

26

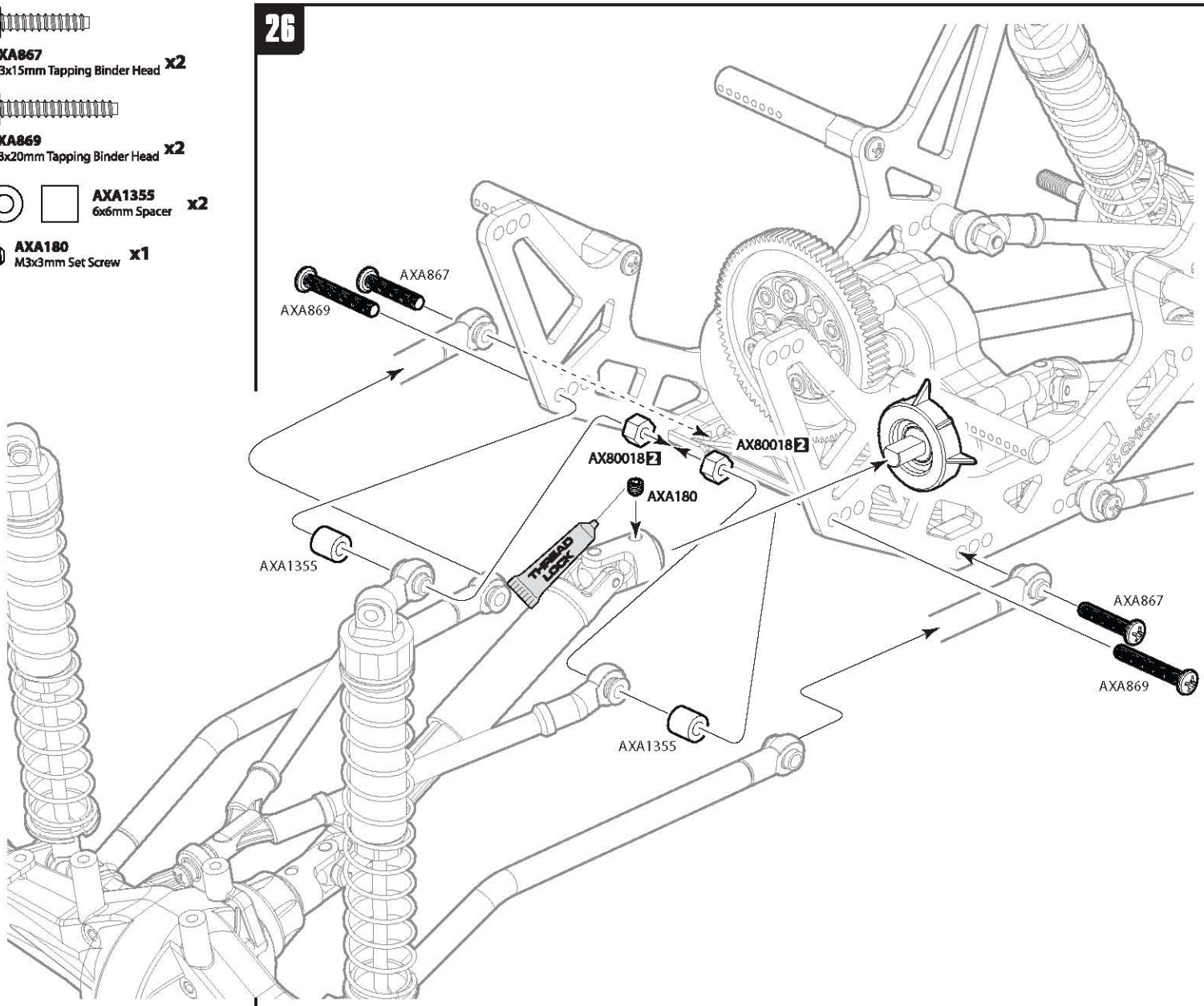

AXA150
M3x25mm x4

AXA1104
Cone Washer 3x6.9x2 x4

AXA1403
7x55mm Post x2

27

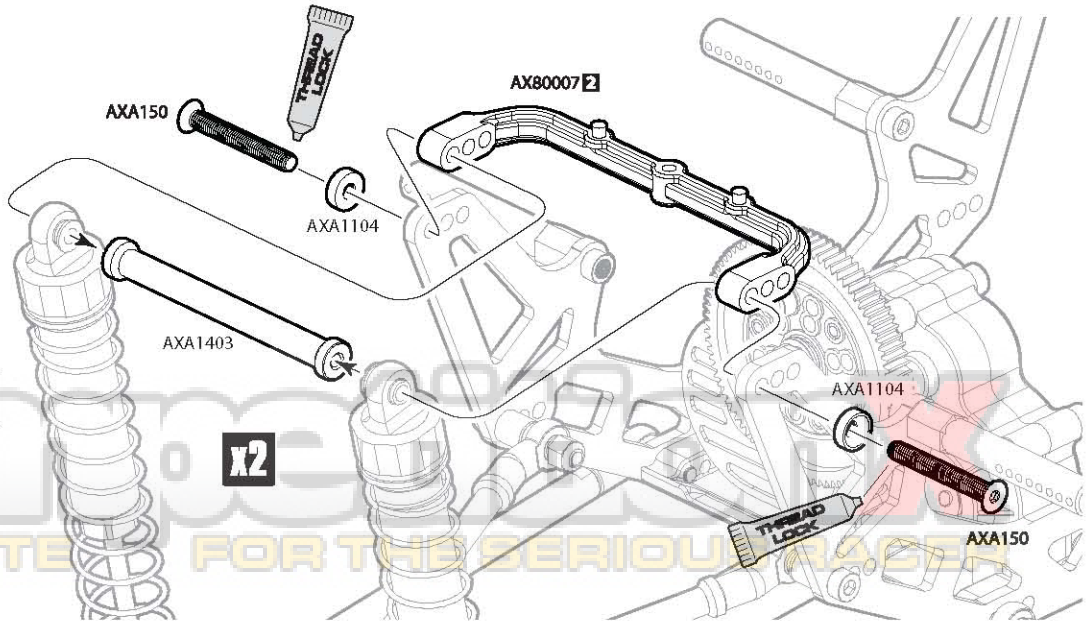

A WEB SITE FOR THE SERIOUS RACER

AXA864
M3x8mm Tapping Binder Head **x2**

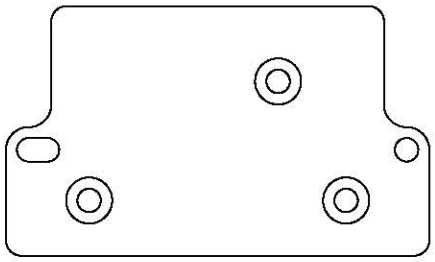

AXA30485
AX10 Scorpion Servo Plate **x1**

28

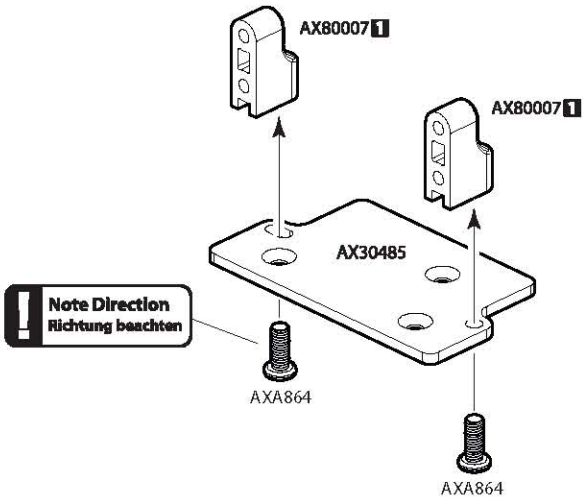

AXA894
M3x8mm Tapping Flat Head **x1**

AXA896
M3x12mm Tapping Flat Head **x2**

29

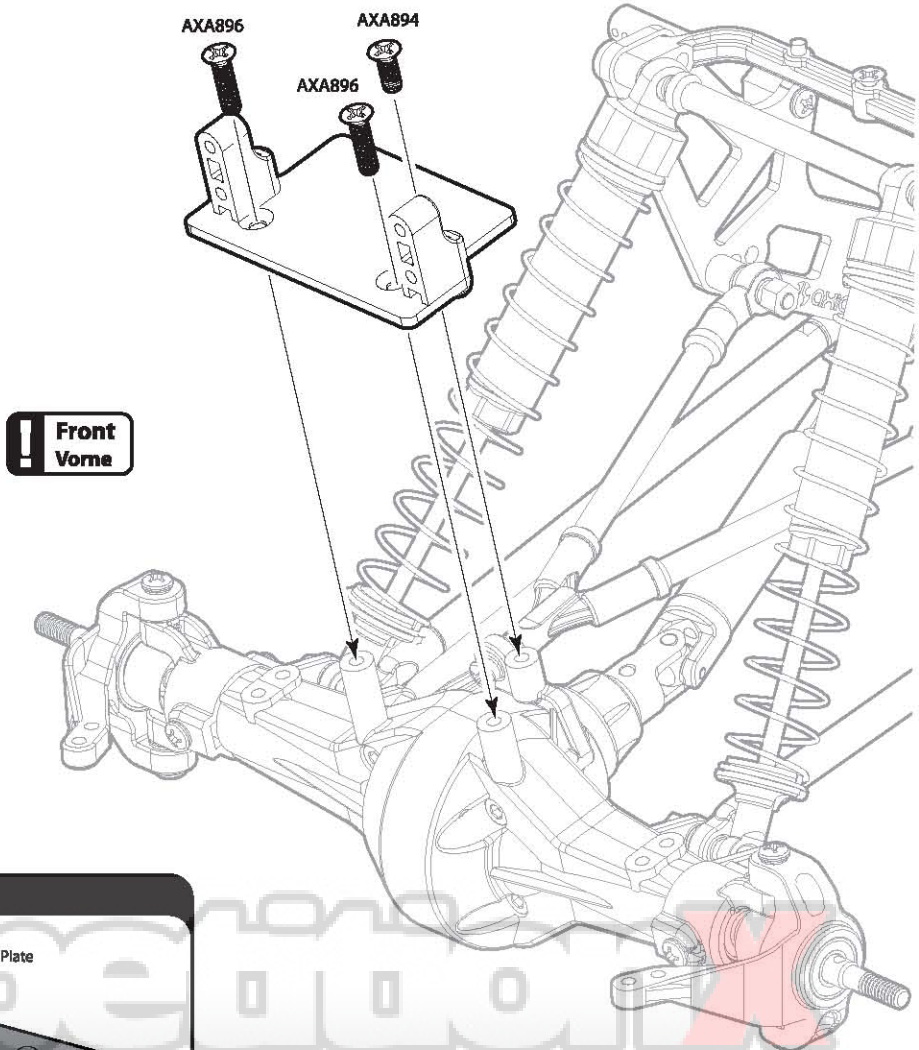

Option Parts

AX30486
AX10 Scorpion Battery/Servo Plate

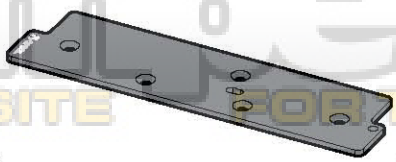

Collection
A WEB SITE FOR THE SERIOUS RACER

30

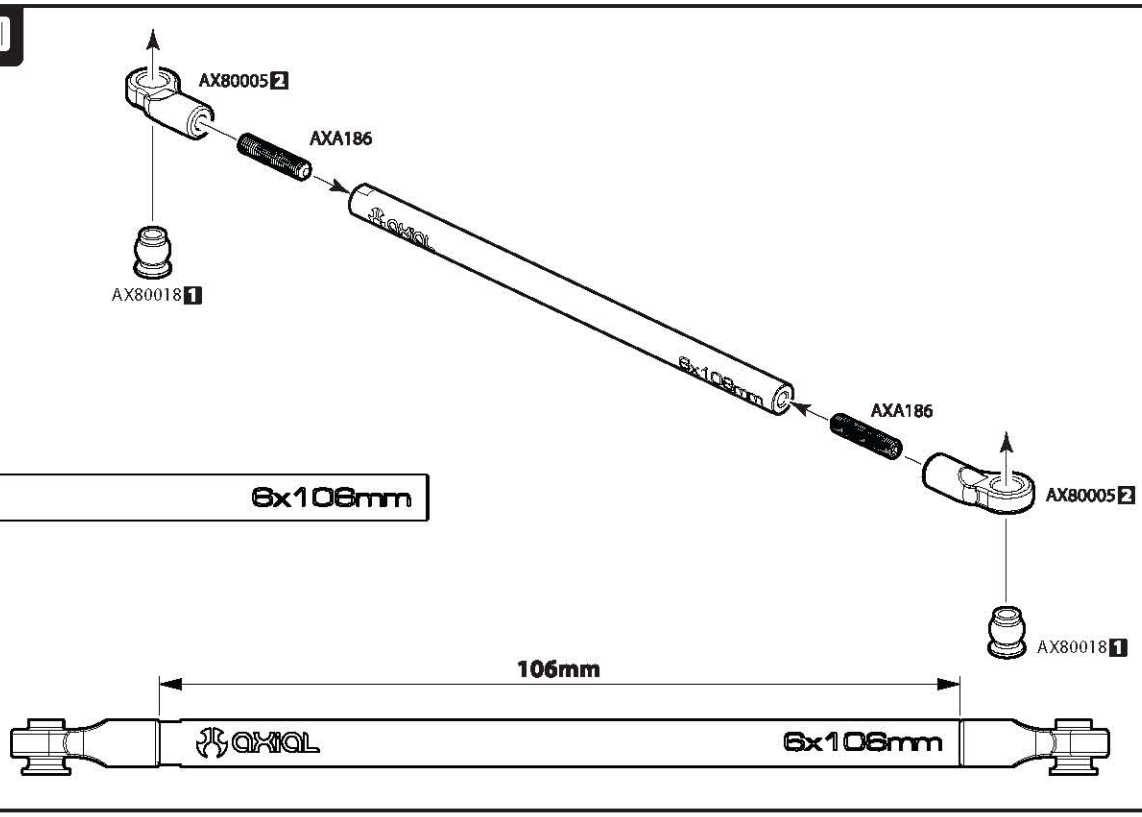

AXA186 M3x16mm Set Screw **x2**

AX30446 6x106mm **x1**

31

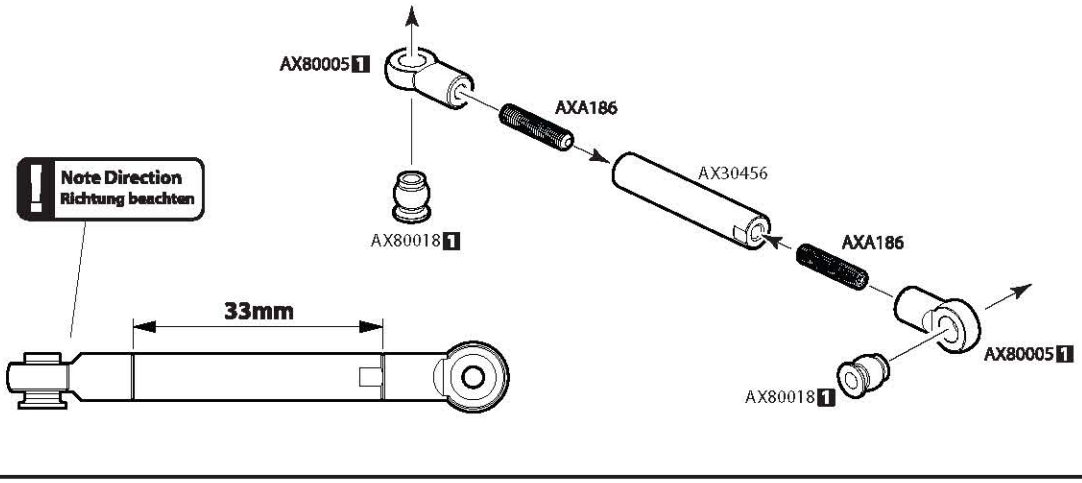

AXA186 M3x16mm Set Screw **x2**

AX30447 6x33mm **x1**

32

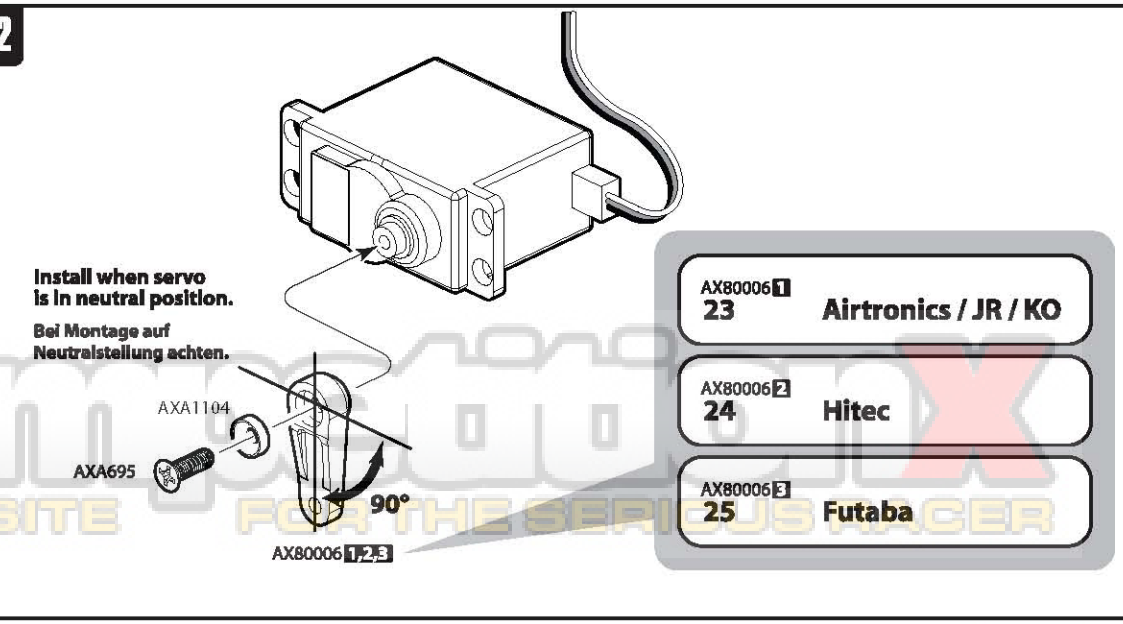

AXA695 M3x10mm **x1**

AXA1104 Cone Washer 3x6.9x2 **x1**

Competition X
A WEB SITE FOR THE SERIOUS RACER

AXA1280
M3x10mm Flange Screw x4

33

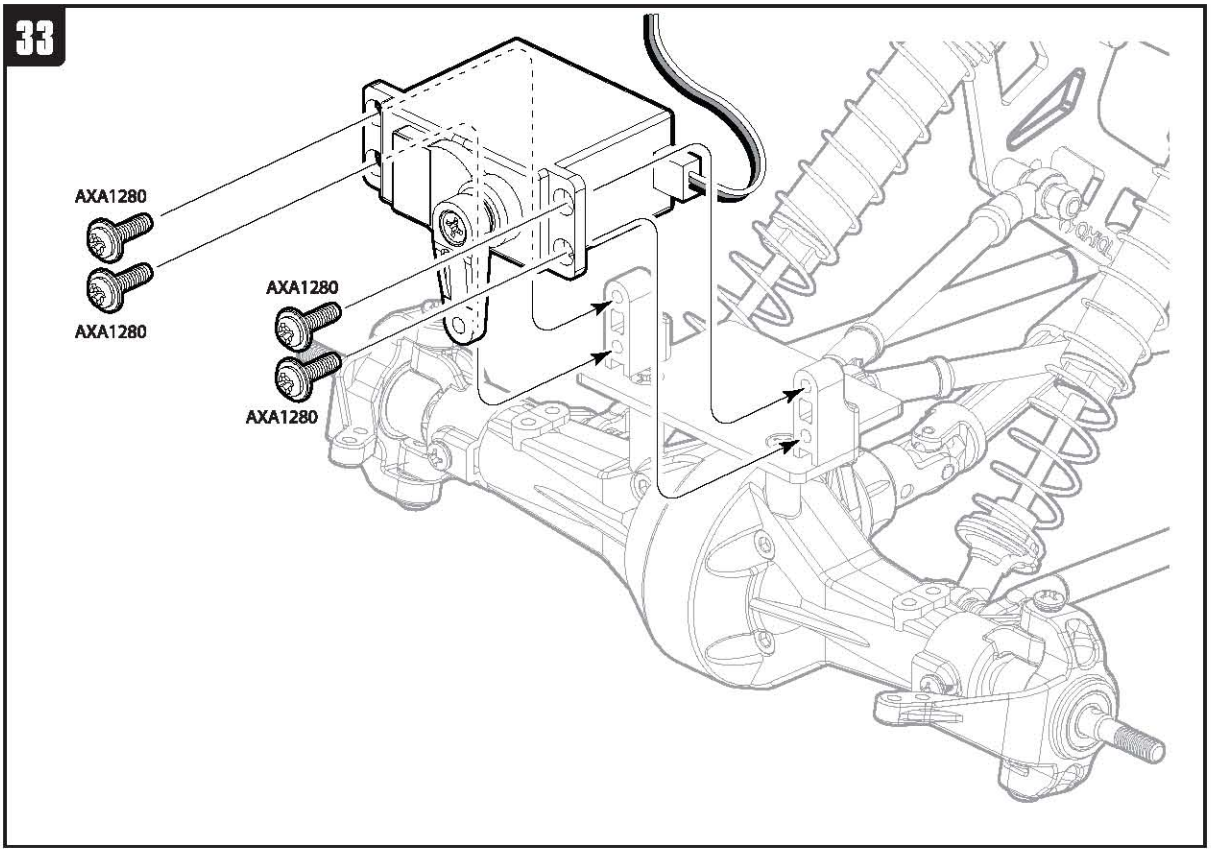

AXA667
M3x15mm x2

AXA670
M3x25mm x1

AXA1053
M3 Nylon Locking Hex Nut x3

AXA1351
2x6mm Spacer x1

34

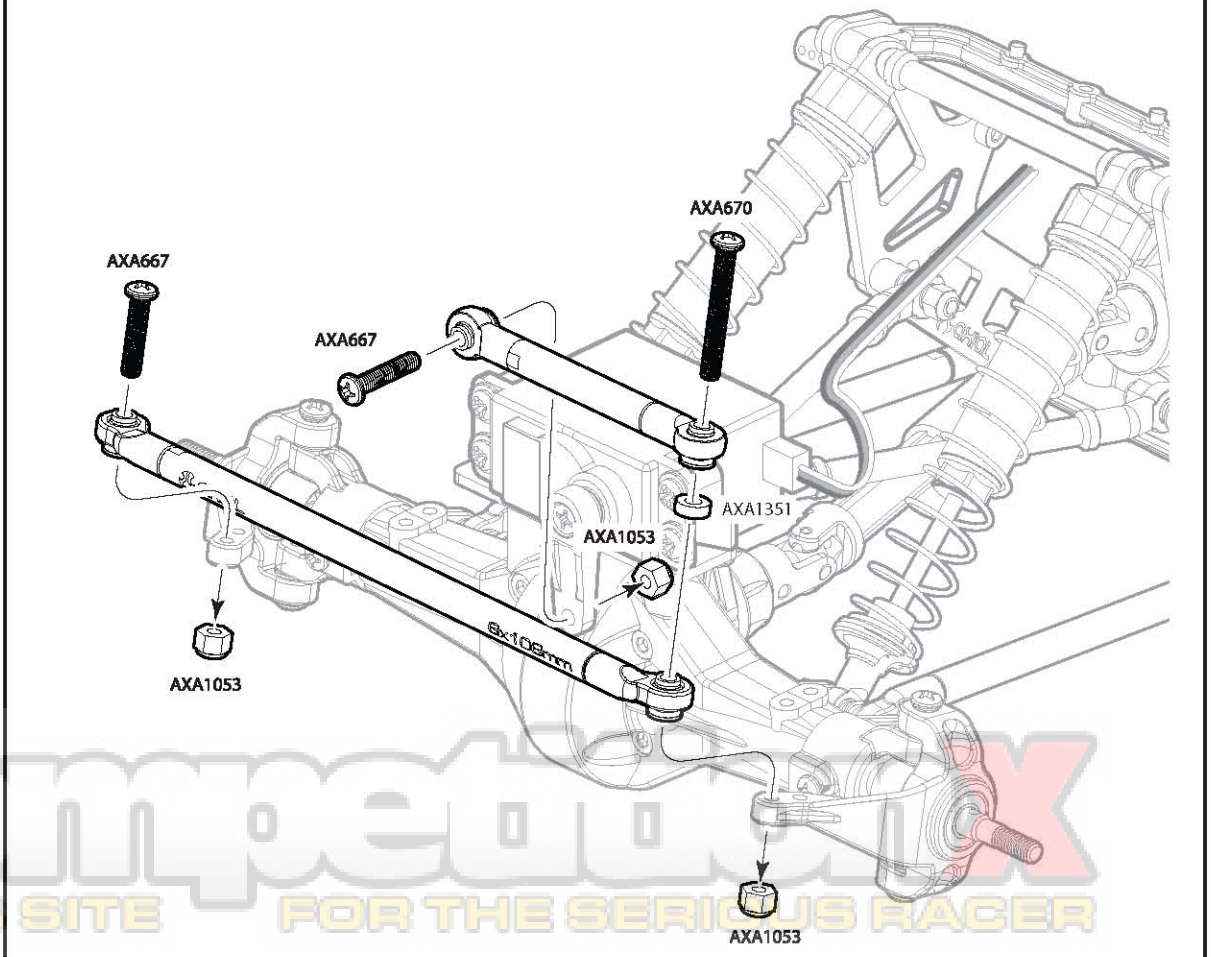

Competition RX
A WEB SITE FOR THE SERIOUS RACER

AXA180
M3x3mm Set Screw **x1**

AX30572
Pinion 48DP 14T **x1**

AXA1070
Washer 3x6x0.5 **x2**

AXA083
M3x6mm **x2**

35

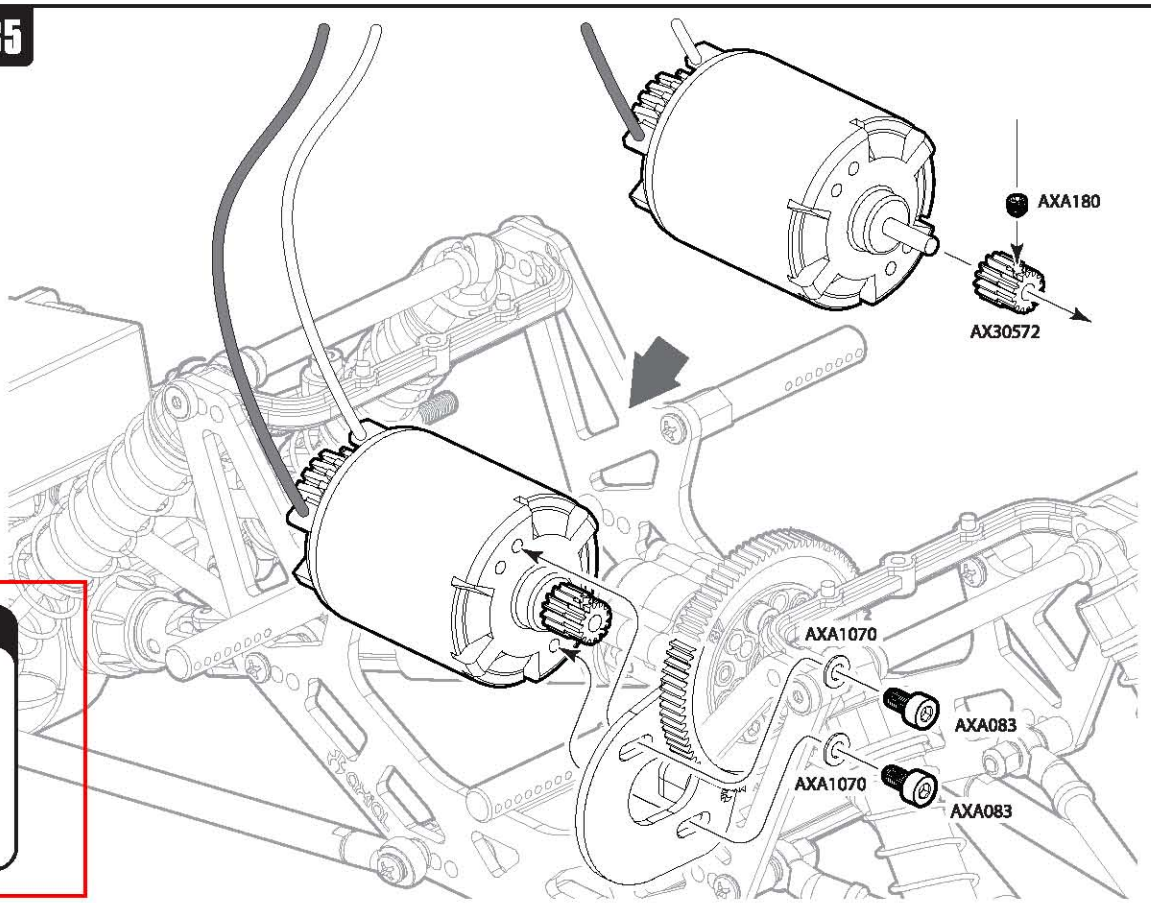

Option Parts

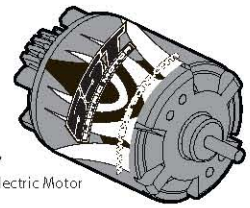

AX24007
Axial 55T Electric Motor

AXA894
M3x8mm Tapping Flat Head **x1**

36

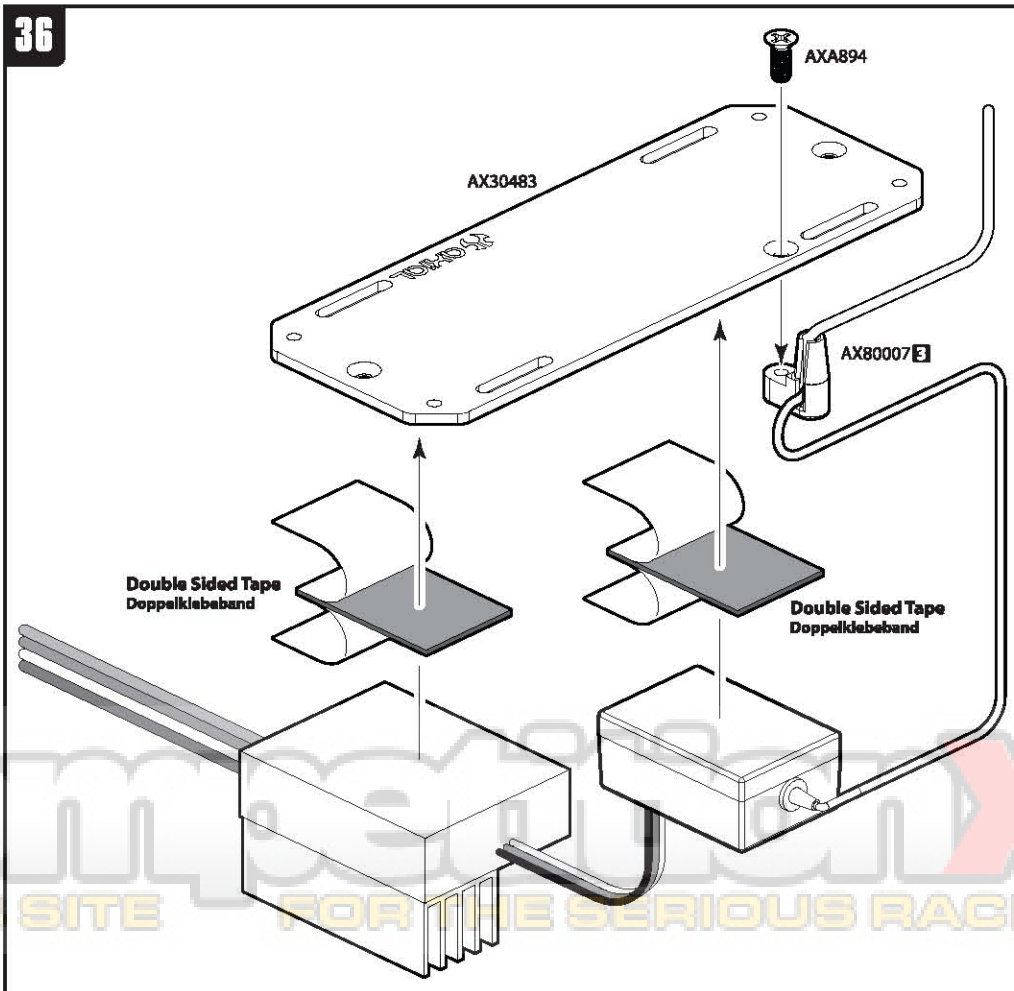

CompetitionX
A WEB SITE FOR THE SERIOUS RACER

AXA894
M3x8mm Tapping Flat Head x2

37

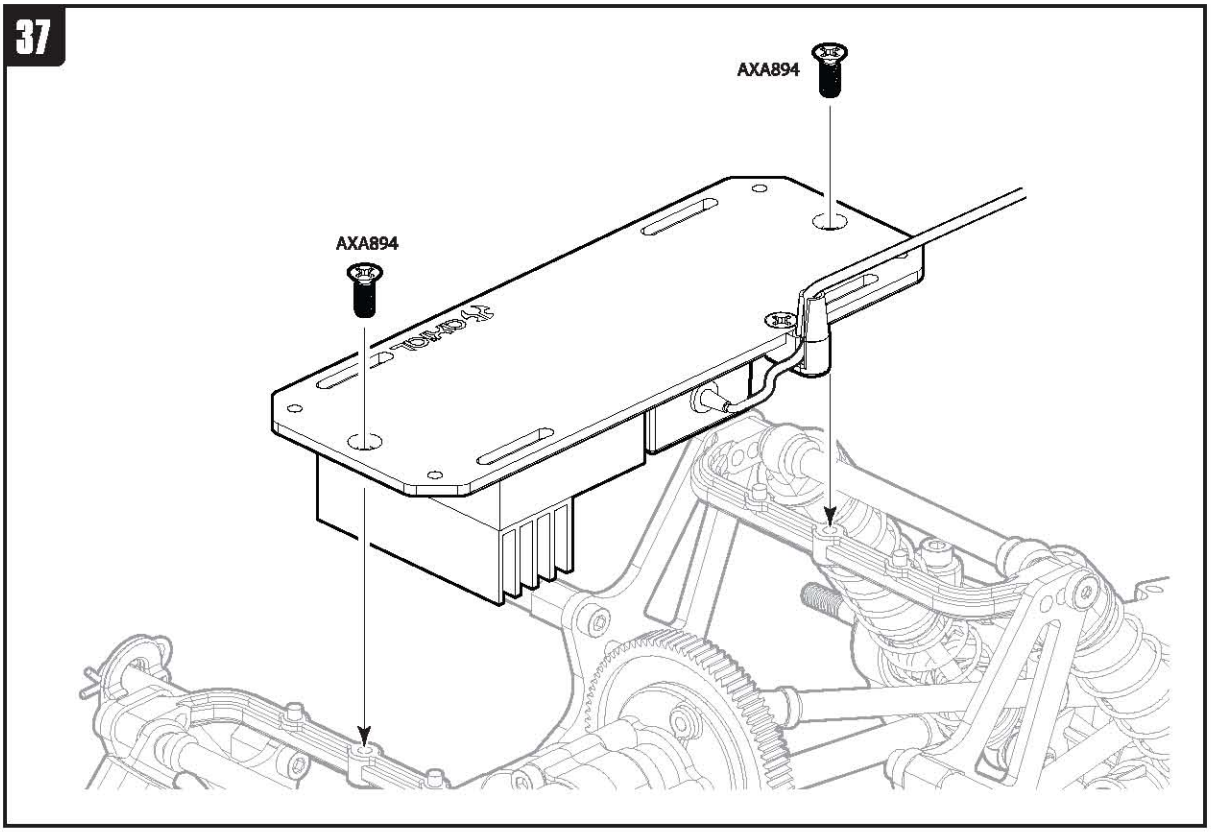

38

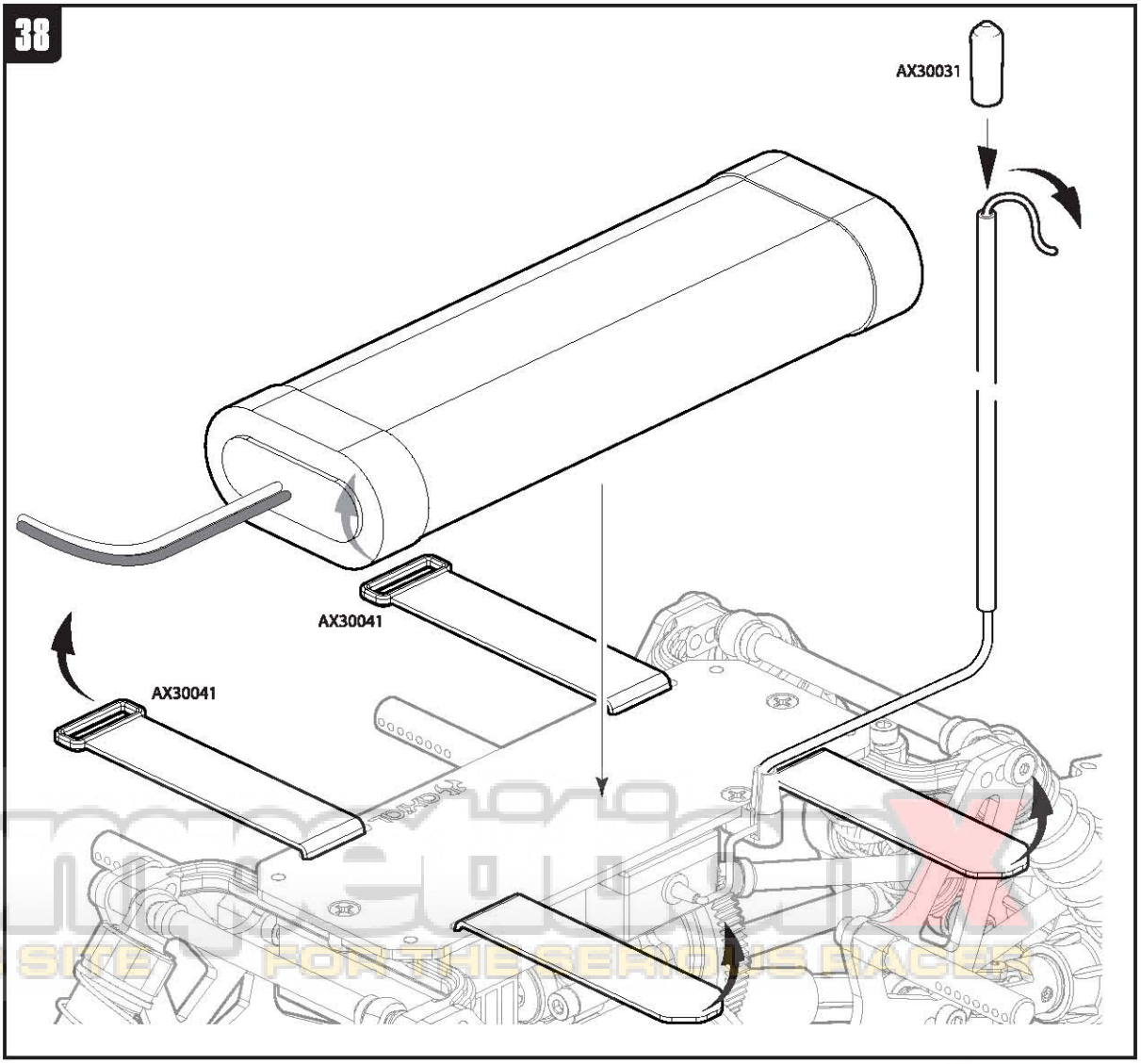

Competition
A WEB SITE FOR THE SERIOUS RACER

AXA015 M2x10mm x48

39

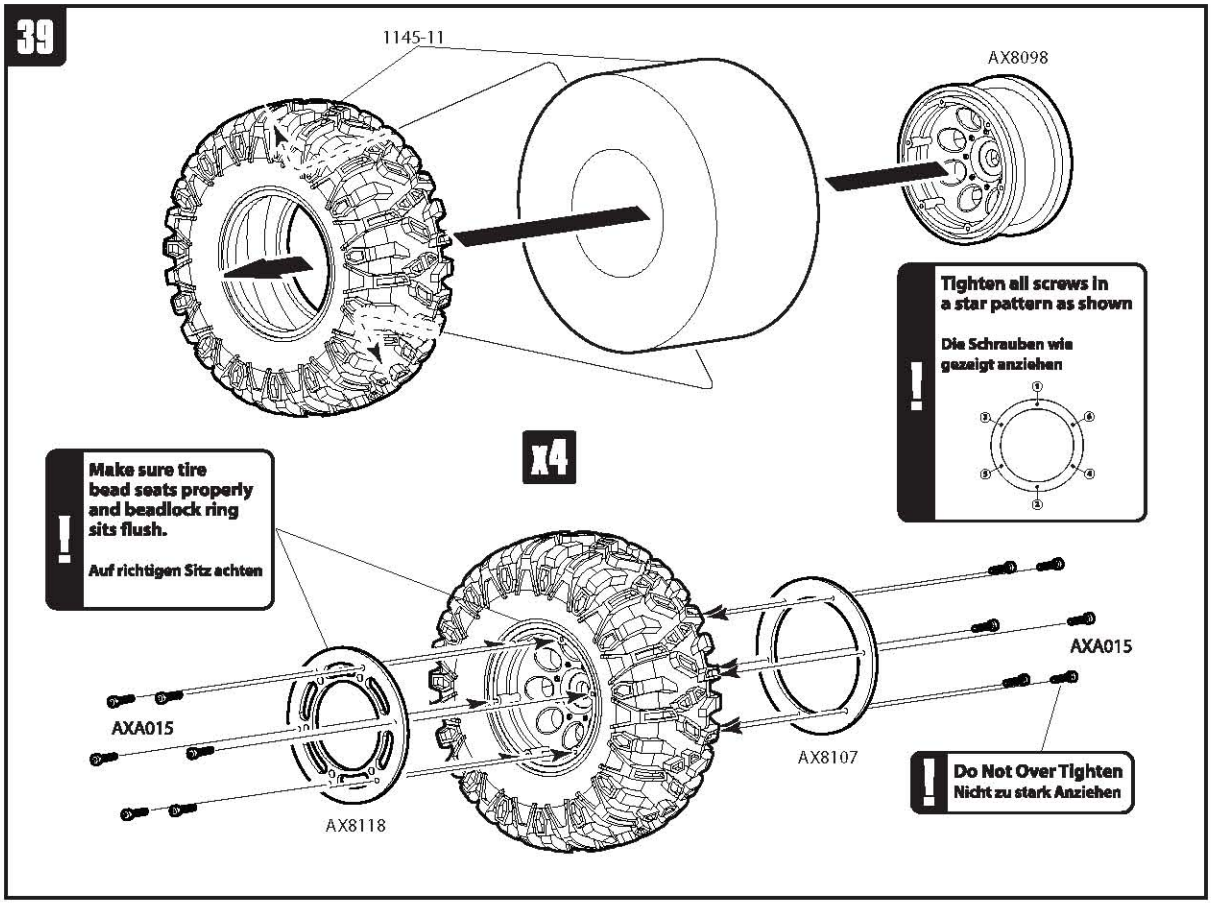

AXA180 M3x3mm Set Screw x4

AX30429 12mm Aluminum Hub x4

AX30163 Pin 2x10mm x4

AXA1045 M4 Nylon Lock Nut x4

AXA1090 Washer 4.8x14 x4

40

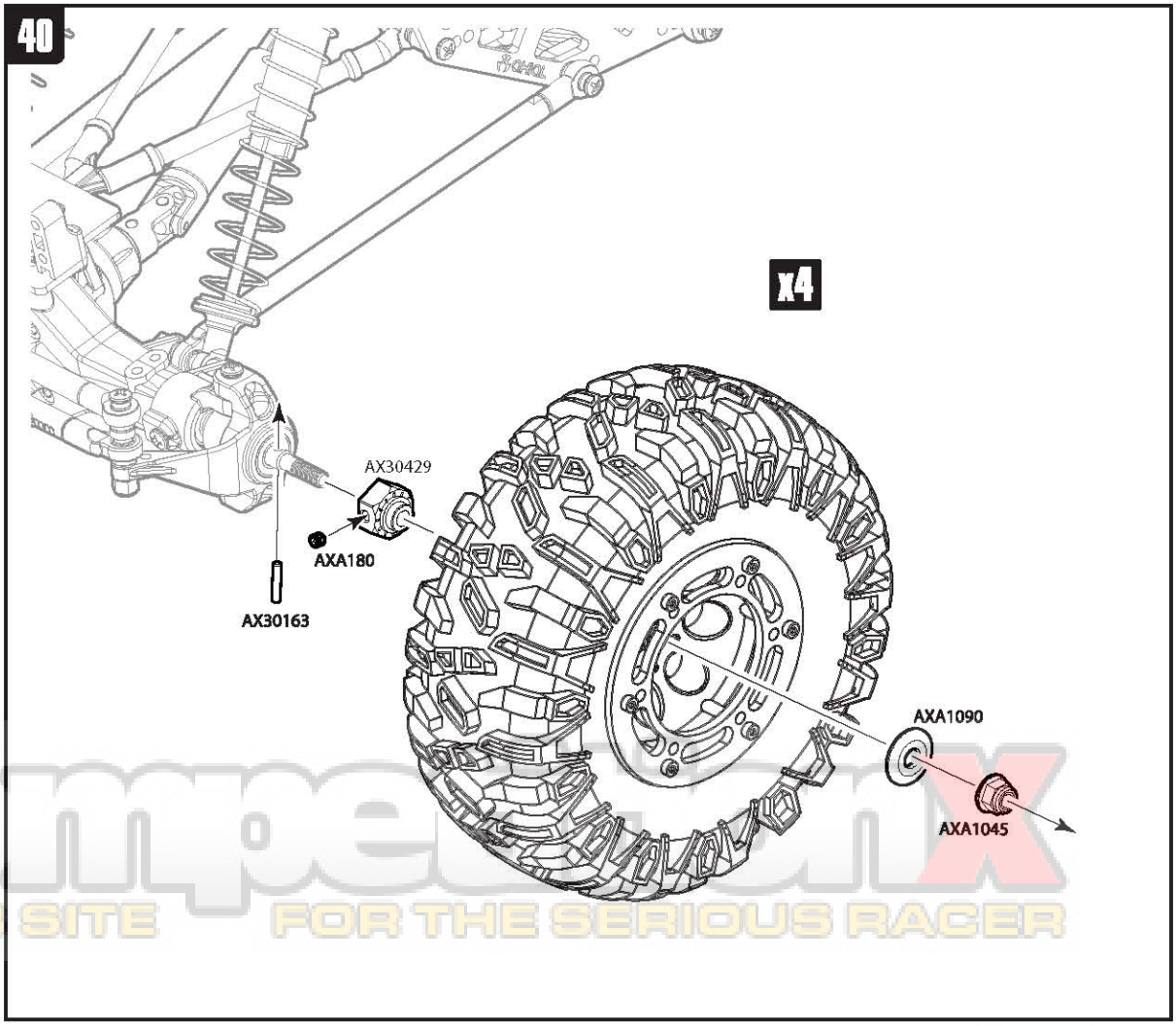

CompetitionX
A WEB SITE FOR THE SERIOUS RACER

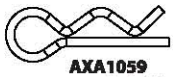

AXA1059
6mm Body Clip **x4**

AX30167
Pin 1.5x12mm **x4**

41

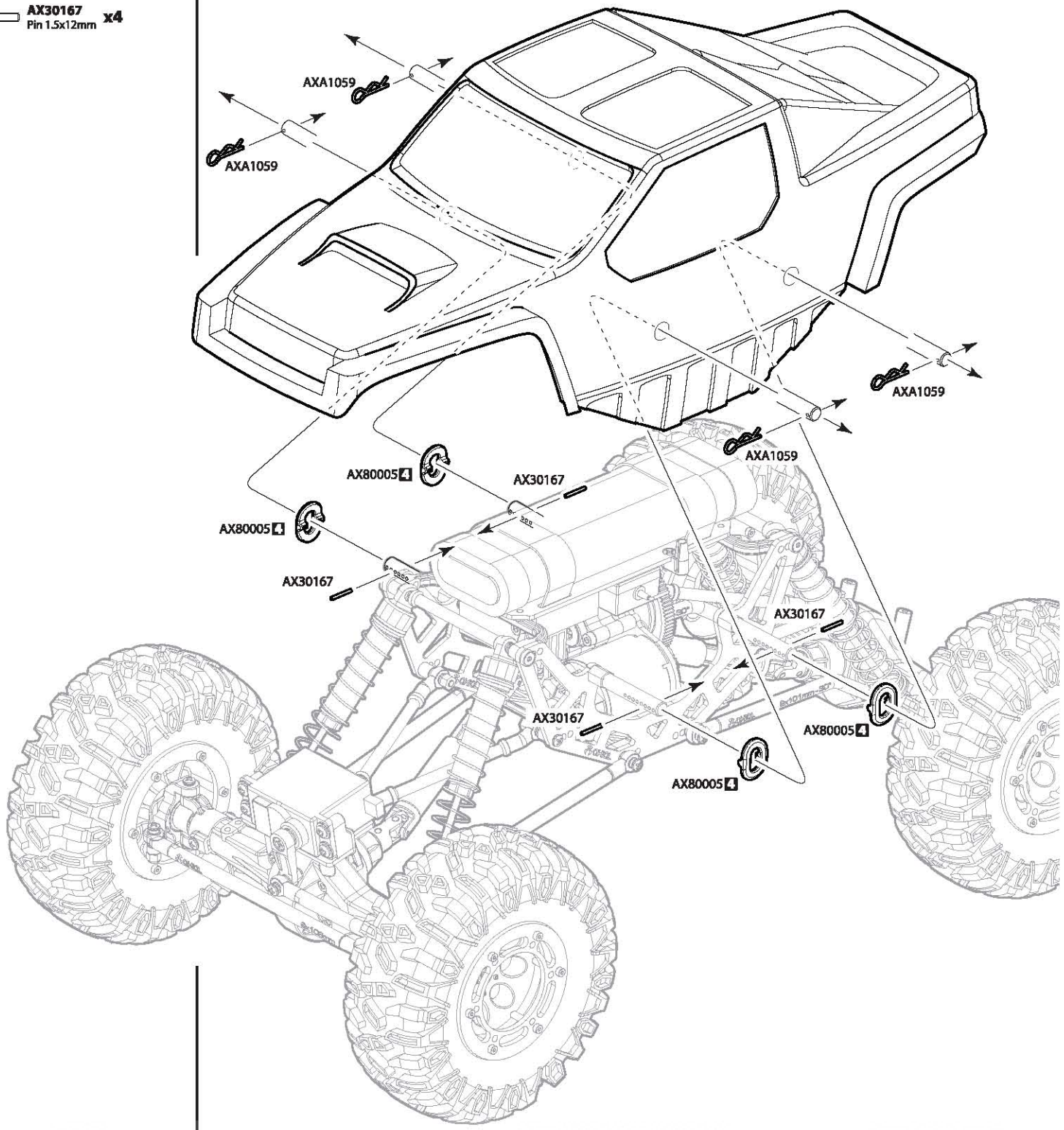

CompetitionX
A WEB SITE FOR THE SERIOUS RACER

Body Post Template

Notes

Option Parts

AX30414
AX10 Scorpion Slipper Clutch Set

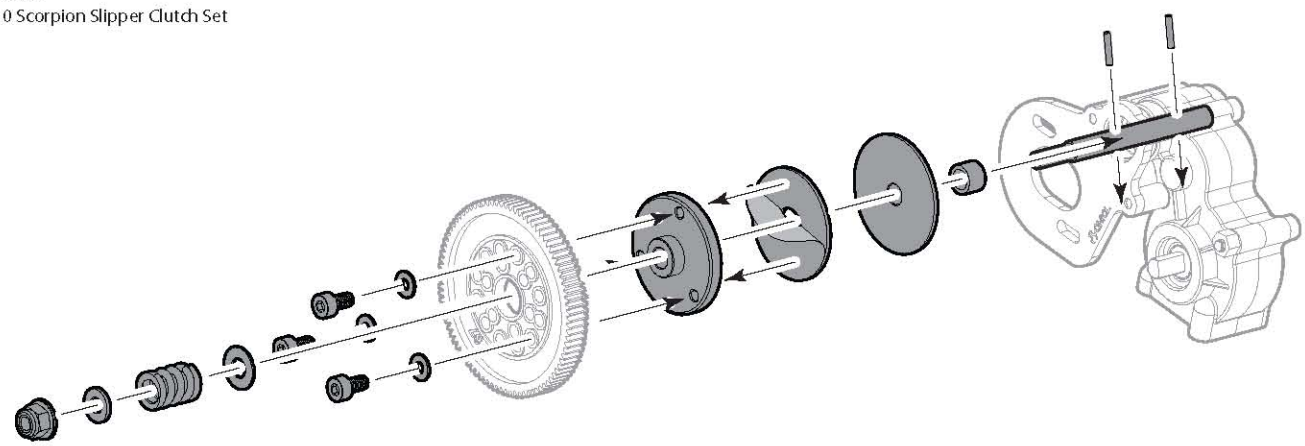

AX30395
Heavy Duty Bevel Gear Set

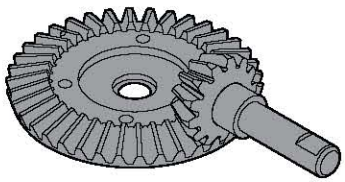

AX30497
AX10 Servo Plate

AX30486
AX10 Scorpion Battery/Servo Plate

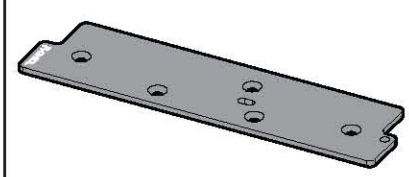

AX30122
Aluminum Shock Body 12x55mm

AX30490
AX10 Scorpion Outrunner
Motor Plate

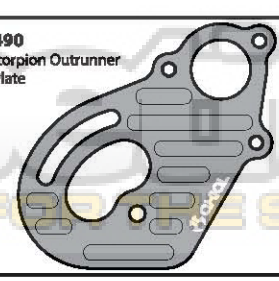

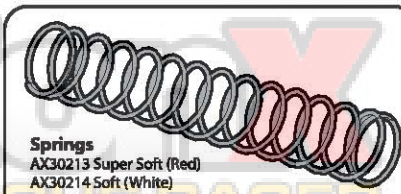

Springs
AX30213 Super Soft (Red)
AX30214 Soft (White)
AX30215 Medium (Green)
AX30216 Firm (Yellow)
AX30217 Super Firm (Blue)

WWW.SITE FOR THE SERIOUS RACER

Parts Reference / Übersicht aller Teile / Référence des pièces

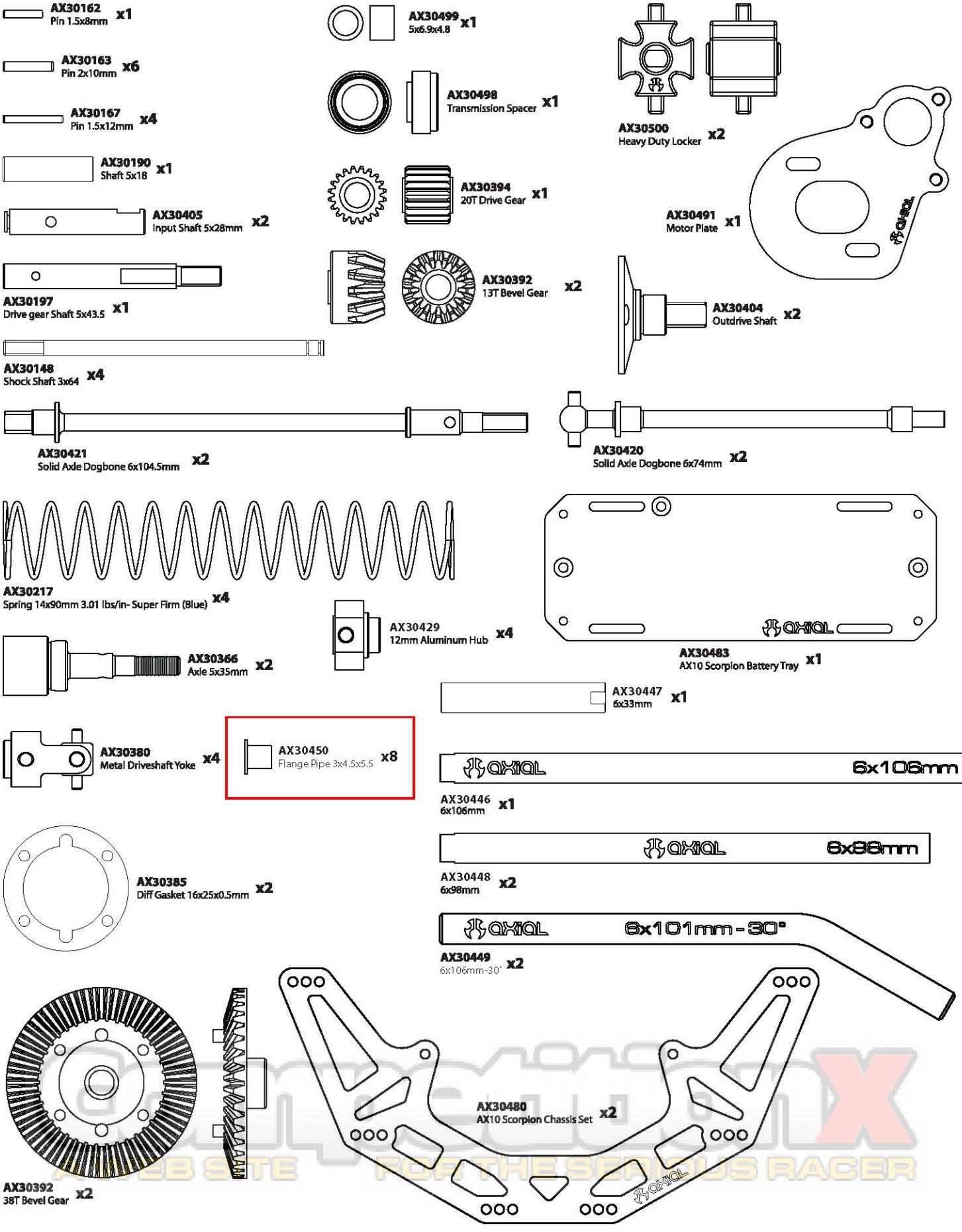

WEB SITE FOR THE SERIOUS RACER

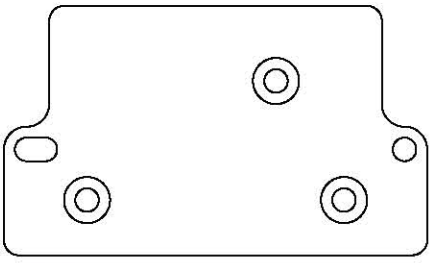

AX30485 x1
AX10 Scorpion Servo Plate

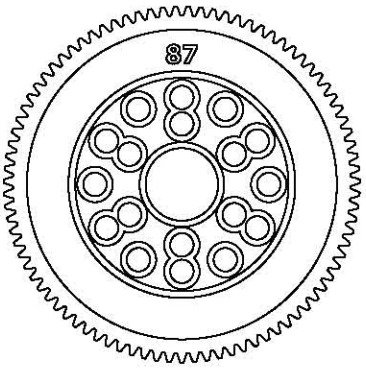

AX30672 x1
Spur 48DP 87T

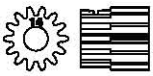

AX30572 x1
Pinion 48DP 14T

AXA013 x3
M2x6mm

AXA015 x56
M2x10mm

AXA083 x2
M3x6mm

AXA084 x3
M3x8mm

AXA085 x4
M3x10mm

AXA087 x4
M3x16mm

AXA088 x1
M3x20mm

AXA089 x7
M3x25mm

AXA1040 x4
M3 Thin Hex Nut

AXA1045 x5
M4 Nylon Lock Nut

AXA1053 x4
M3 Nylon Locking Hex Nut

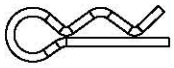

AXA1059 x4
6mm Body Clip

AXA1070 x5
Washer 3x6x0.5

AX1071 x2
Washer 4x8x0.5mm

AXA1104 x5
Cone Washer 3x6.9x2

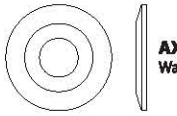

AXA1090 x4
Washer 4.8x14

AXA1201 x8
O-Ring 3x2mm (P3)

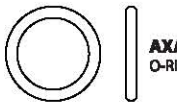

AXA1186 x4
O-Ring 9.5x1.5mm (S10)

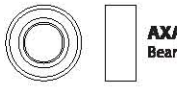

AXA1218 x4
Bearing 5x10x4mm

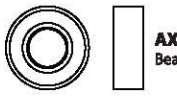

AXA1221 x10
Bearing 5x11x4mm

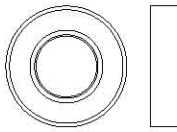

AXA1225 x2
Bearing 8x16x5mm

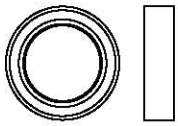

AXA1230 x6
Bearing 10x15x4mm

AXA1351 x1
2x6mm Spacer

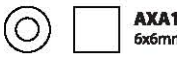

AXA1355 x4
6x6mm Spacer

AXA1327 x3
7.5x6mm Spacer

AXA1358 x4
Shock Damper 3x7x8

AXA1403 x6
7x55mm Post

AXA1392 x8
E2 e-clip

AXA1393 x2
E2.5 e-clip

AXA180 x9
M3x3mm Set Screw

AXA186 x20
M3x16mm Set Screw

AXA863 x8
M3x6mm Tapping Binder Head

AXA864 x2
M3x8mm Tapping Binder Head

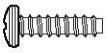

AXA865 x8
M3x10mm Tapping Binder Head

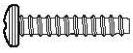

AXA867 x4
M3x15mm Tapping Binder Head

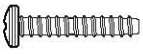

AXA868 x2
M3x18mm Tapping Binder Head

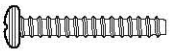

AXA869 x4
M3x20mm Tapping Binder Head

AXA894 x6
M3x8mm Tapping Flat Head

AXA895 x2
M3x10mm Tapping Flat Head

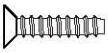

AXA896 x2
M3x12mm Tapping Flat Head

AXA1280 x4
M3x10mm Flange Screw

AXA667 x2
M3x15mm

AXA670 x1
M3x25mm

AXA695 x1
M3x10mm

AXA150 x4
M3x25mm

competitionX
A WEB SITE FOR THE SERIOUS RACER

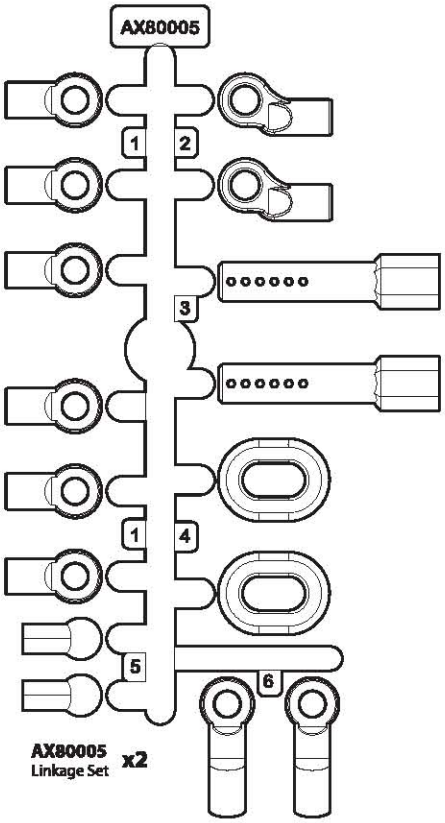

AX80005 x2
Linkage Set

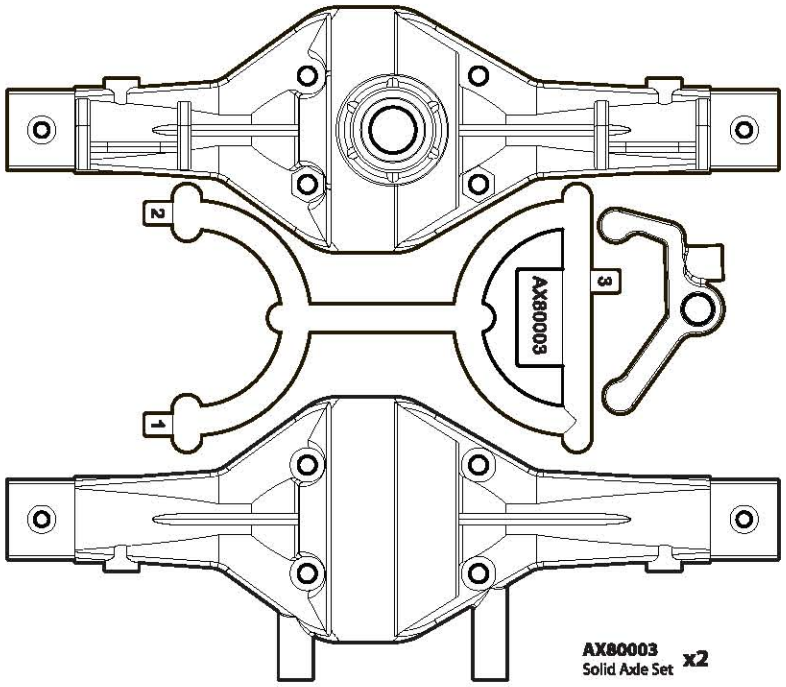

AX80003 x2
Solid Axle Set

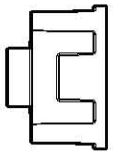

AX80002 x2
Diff Case

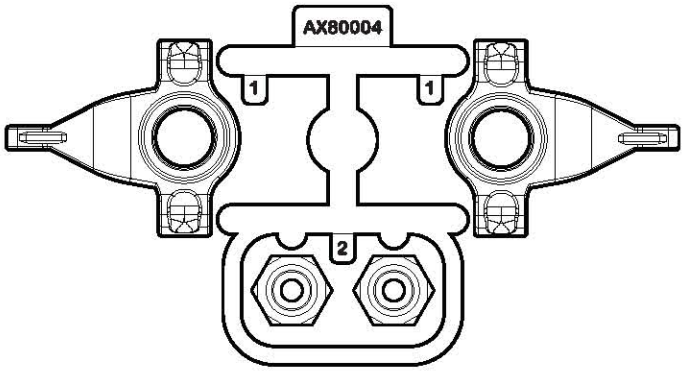

AX80004 x2
Hub Set

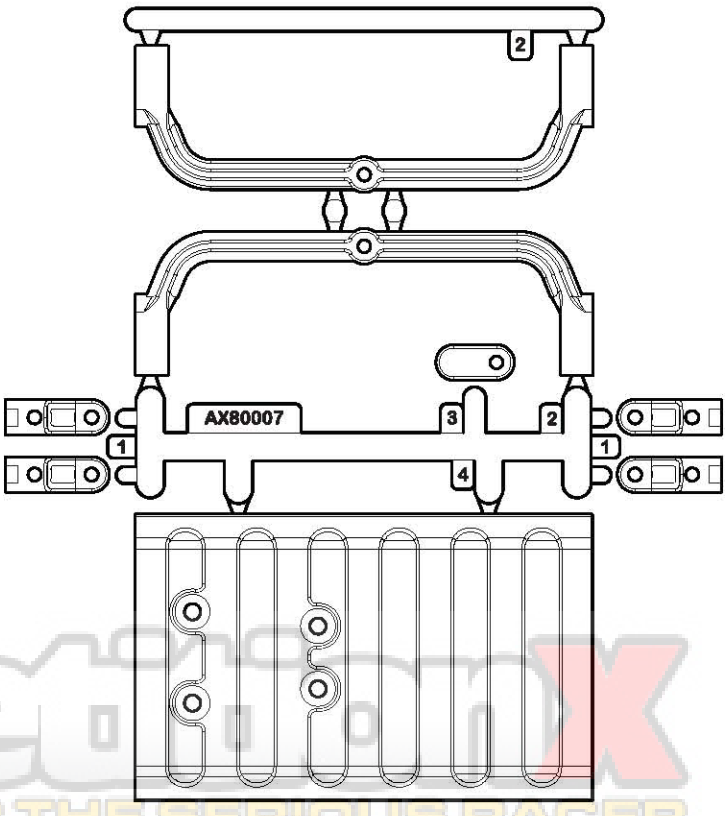

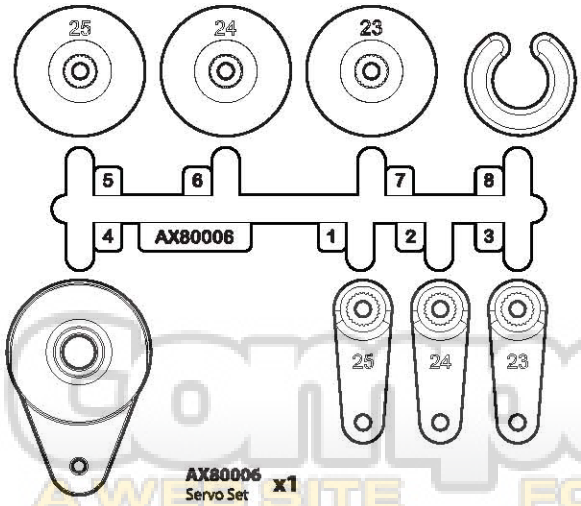

AX80006 x1
Servo Set

AX80007 x1
Radio/Transmission Mounting Set

A WEB SITE FOR THE SERIOUS RACER

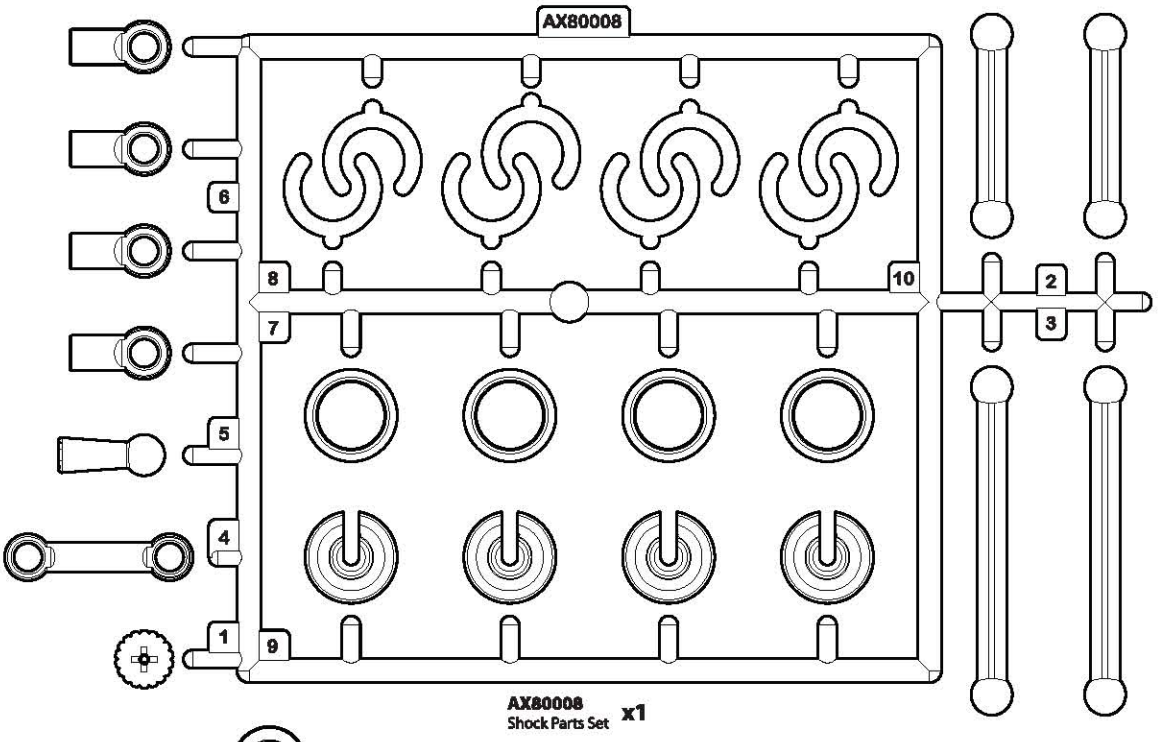

AX80008
Shock Parts Set **x1**

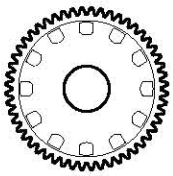

AX80010 **x1**
Gear Set

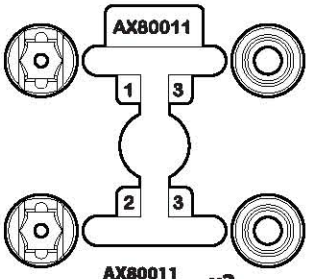

AX80011 **x2**
Drive Shaft Set

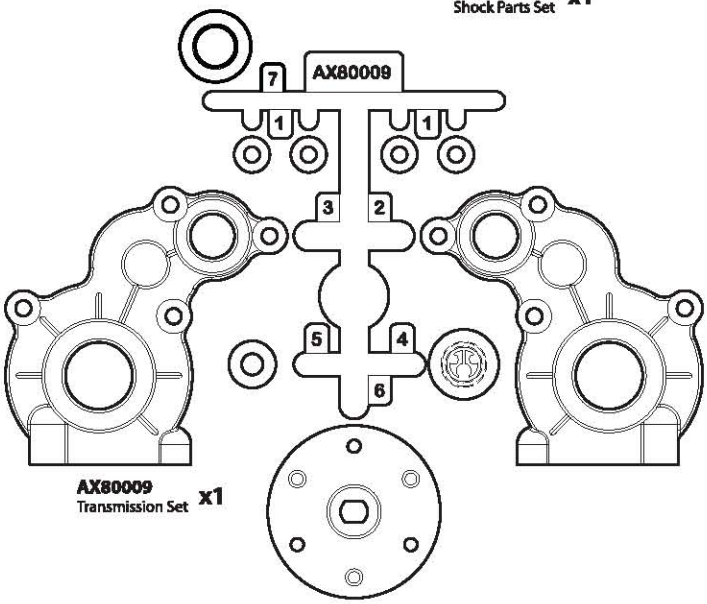

AX80009 **x1**
Transmission Set

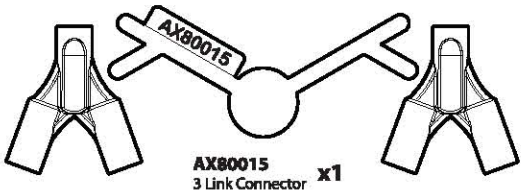

AX80015 **x1**
3 Link Connector

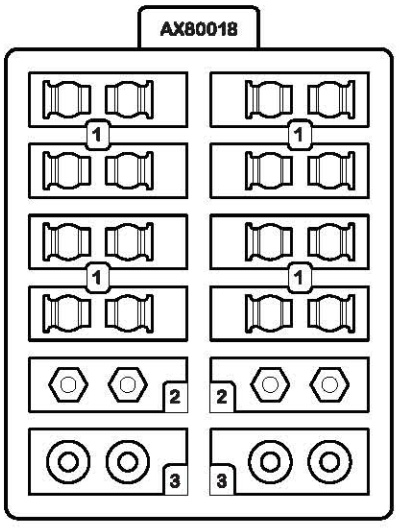

AX80018 **x2**
Hardware Parts Tree

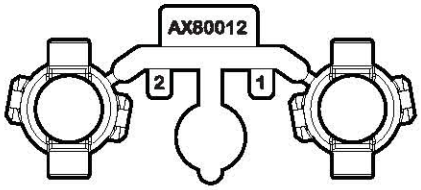

AX80012 **x2**
C Hub Carrier Set

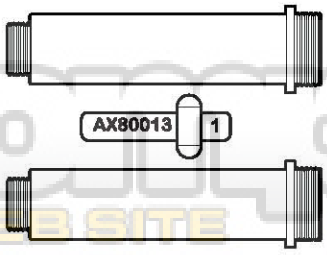

AX80013 **x2**
80-125 Shock Body Set

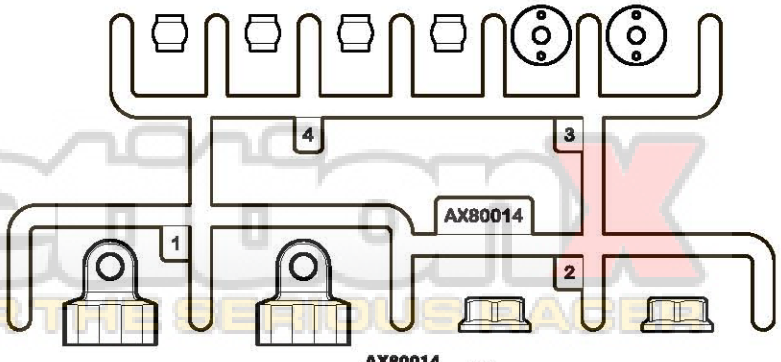

AX80014 **x2**
Shock Cap Set

Scorpion
A WEB SITE FOR THE SERIOUS RACER

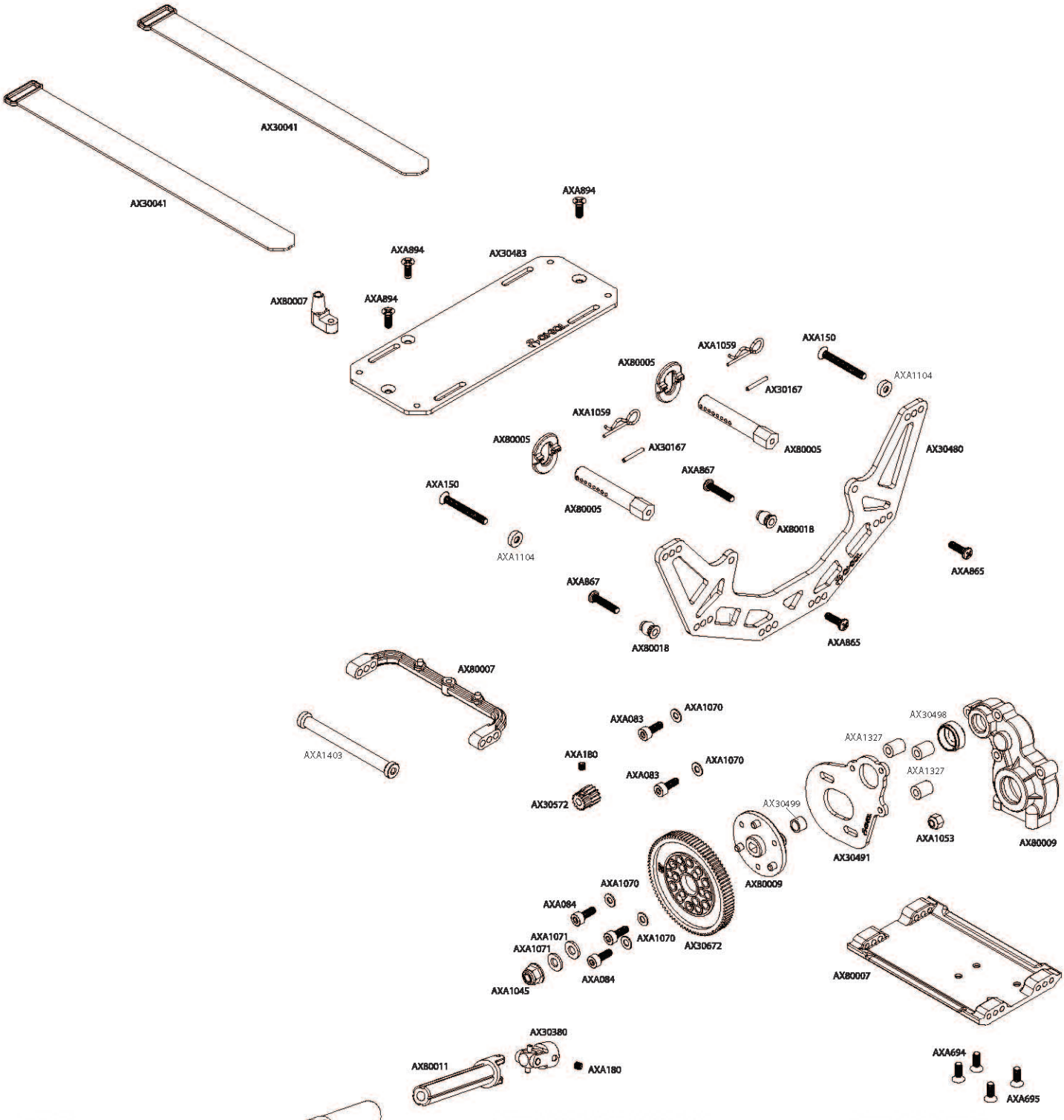

CompetitionX
A WEB SITE FOR THE SERIOUS RACER

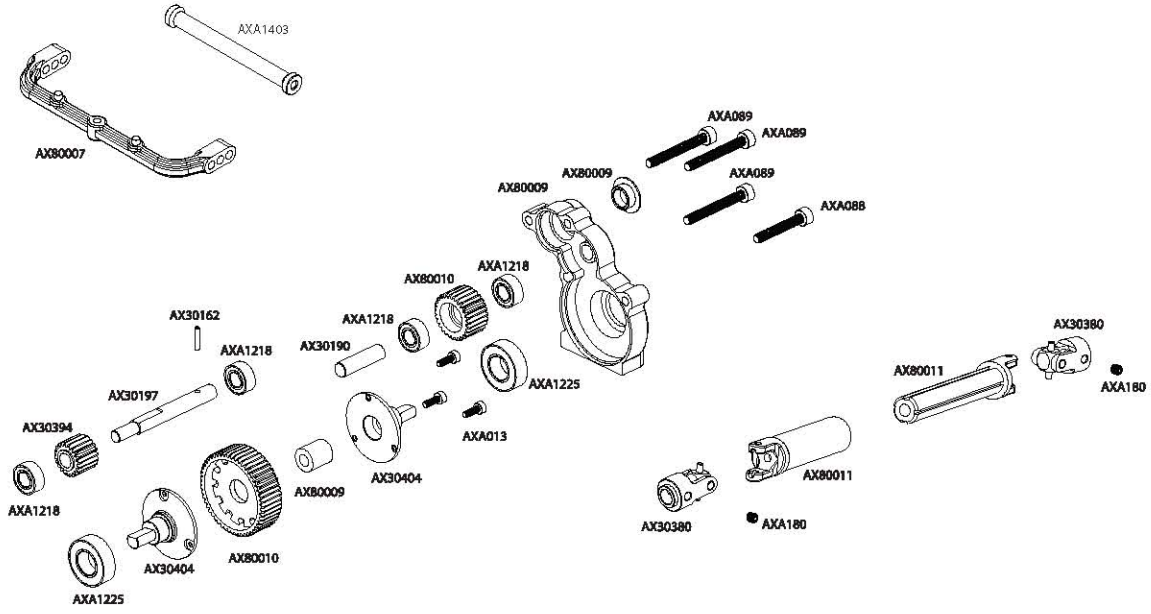

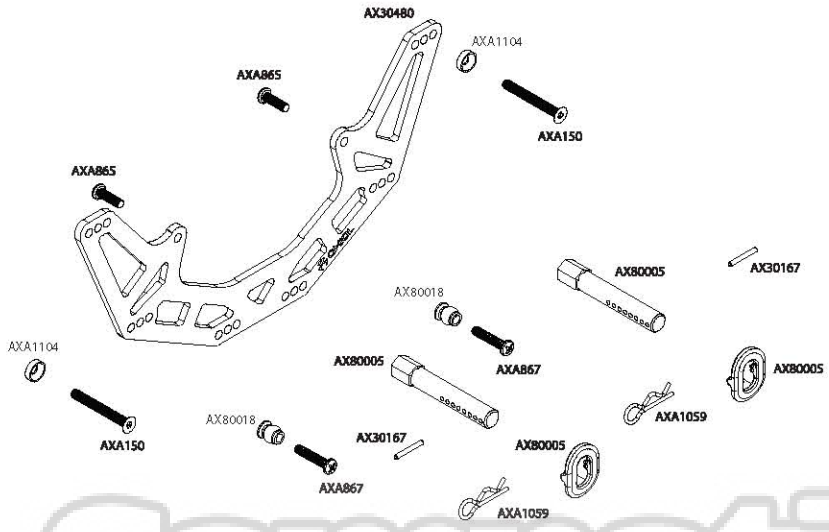

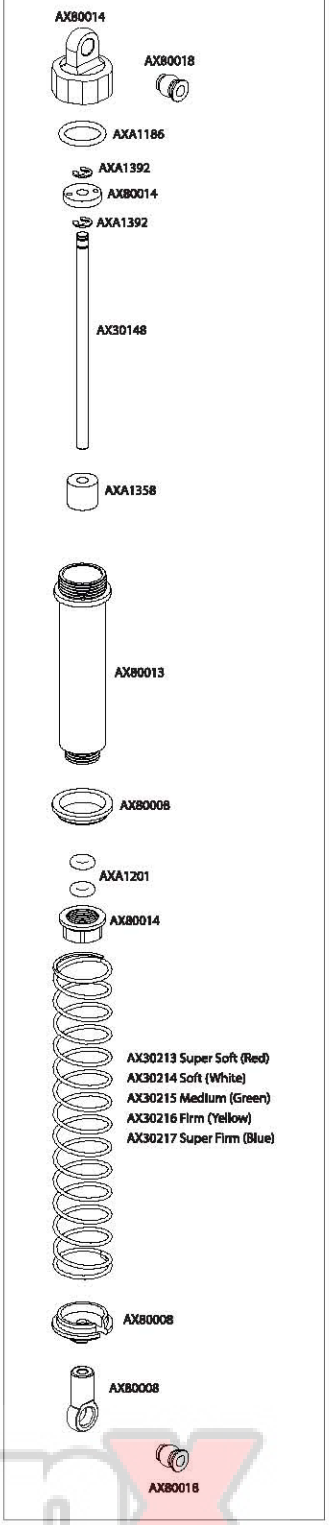

Competition X
A WEB SITE FOR THE SERIOUS RACER

Exploded View / Explosionsansicht / Vue éclatée

Competition X
A WEB SITE FOR THE SERIOUS RACER

CompetitionX
WEB SITE FOR THE SERIOUS RACER

Parts List

Part #	Description
AX30031	Antenna
AX30041	Velcro Strap 15x160mm
AX30148	Shock Shaft 3x64 (2pcs).
AX30162	Pin 1.5x8mm (6pcs.)
AX30163	Pin 2.0x10 (6pcs.)
AX30167	Pin 1.5x12mm (6pcs.)
AX30190	Shaft 5x18 (2pcs.)
AX30197	Drive gear Shaft 5x43.5
AX30217	Spring 14x90mm 3.01 lbs/in - Super Firm (Blue)
AX30366	Axle 5x35mm (2pcs.)
AX30380	Metal Driveshaft Yoke Set (2pcs)
AX30385	Diff Gasket 16x25x0.5mm (2pcs)
AX30392	Bevel Gear Set (38/13)
AX30394	20T Drive Gear
AX30404	Outdrive Shaft (2pcs)
AX30405	Input Shaft 5x28mm (2pcs)
AX30420	Solid Axle Dogbone 6x74mm (2pcs)
AX30421	Straight Axle 6x104.50mm
AX30429	12mm Aluminum Hub (Black)
AX30446	Threaded Aluminum Pipe 6x106mm - Orange (2 pcs.)
AX30447	Threaded Aluminum Pipe 6x33mm - Orange (2pcs.)
AX30448	Threaded Aluminum Pipe 6x98mm - Orange (2 pcs.)
AX30449	Threaded Aluminum Pipe 6x101mm - 30° Angle - Orange (2 pcs.)
AX30450	Flange Pipe 3x4.5x5.5 (4pcs)
AX30480	AX10 Scorpion Chassis Set
AX30483	AX10 Scorpion Radio Plate
AX30491	AX10 RTR Motor Plate
AX30498	Transmission Spacer
AX30485	AX10 Scorpion Servo Plate
AX30499	Transmission Spacer 5x6.9x4.8mm
AX30500	Heavy Duty Locker
AX30572	Pinion 48DP 14T
AX30672	Spurs 48DP 87T
AX80002	Diff Case -Small
AX80003	Solid Axle Set
AX80004	Hub Set
AX80005	Linkage Set
AX80006	Servo Set
AX80007	Radio/Transmission Mounting Set
AX80008	Shock Parts Set
AX80009	Transmission Set
AX80010	Gear Set
AX80011	Drive Shaft Set
AX80012	C Hub Carrier Set
AX80013	80-125 Shock Body Set
AX80014	Shock Cap Set
AX80015	3 Link Connector
AX80018	Hardware Parts Tree
AX80020	Plastic Rear Axle Lock-out (2pcs)
AX8098	2.2 8 Hole Beadlocks (Satin Chrome)
AX8107	2.2 Beadlock Ring - Orange (2pcs)
AX8118	2.2 Rock Beadlock Ring - Orange (2pcs)

Part #	Description
AXA013	M2x6mm Cap Head (Black) (10pcs)
AXA015	M2x10mm Cap Head (Black) (10pcs)
AXA083	M3x6mm Cap Head (Black) (10pcs)
AXA084	M3x8mm Cap Head (Black) (10pcs)
AXA086	M3x12mm Cap Head (Black) (10 pcs)
AXA087	M3x16mm Cap Head (Black) (10pcs)
AXA088	M3x20mm Cap Head (Black) (10pcs)
AXA089	M3x25mm Cap Head (Black) (10pcs)
AXA1040	M3 Thin Hex Nut (Black) (10pcs)
AXA1045	M4 Nylon Lock Nut (Black) (10pcs)
AXA1053	M3 Nylon Locking Hex Nut (Black) (10pcs)
AXA1059	6mm Body clip (Black) (10pcs)
AXA1070	Washer 3x6x0.5 (10pcs)
AXA1071	Washer 4x8x0.5mm (10pcs)
AXA1090	Washer 4x8x14mm (Black) (10pcs)
AXA1104	Cone Washer 3x6.9x2mm - Orange (6pcs)
AXA1186	O-Ring 9.5x1.5mm (S10) (10pcs)
AXA1201	O-Ring 3x2mm (P3) (10pcs)
AXA1218	Bearing 5x10x4mm (2pcs)
AXA1221	Bearing 5x11x4mm (2pcs)
AXA1225	Bearing 8x16x5mm (2pcs)
AXA1230	Bearing 10x15x4mm
AXA1280	M3x10mm Servo Flange Screw (10pcs)
AXA1351	2x6mm Spacer - Orange (6pcs)
AXA1355	6x6mm Spacer - Orange (6pcs)
AXA1327	7.5x6mm Spacer - Grey (6pcs)
AXA1403	7x55mm Post - Orange (2pcs)
AXA1358	Shock Damper 3x7x8 (10pcs)
AXA1392	E2 e-clip (10pcs)
AXA1393	E2.5 e-clip (10pcs)
AXA150	M3x25mm Hex Socket Flat Head (Black) (10pcs)
AXA180	M3x3mm Set Screw (Black) (10pcs)
AXA186	M3x16mm Set Screw (Black) (10pcs)
AXA863	M3x6mm Tapping Binder Head (Black Oxide) (10pcs)
AXA864	M3x8mm Tapping Binder Head (Black) (10pcs)
AXA865	M3x10mm Tapping Binder Head (Black) (10pcs)
AXA867	M3x15mm Tapping Binder Head (Black) (10pcs)
AXA868	M3x18mm Tapping Binder Head (Black) (10pcs)
AXA869	M3x20mm Tapping Binder Head (Black) (10pcs)
AXA894	M3x8mm Tapping flat Head (Black) (10pcs)
AXA895	M3x10mm Tapping Flat Head (Black) (10pcs)
AXA896	M3x12mm Tapping Flat Head (Black) (10pcs)
AXA667	M3x15mm Binder Head (Black) (10pcs)
AXA670	M3x25mm Binder Head (Black) (10pcs)
AX4020	Axial XC-1 Rock Crawler Body - .040" (Pre-printed) - Orange
Pro-Line Tires and Memory Foam	
1145-11	(M2) Pro-Line Hammer Tire w/Memory Foam
Option Parts	
AX12010	Axial 2.2 Rock Lizards Tires
AX12011	Axial 2.2 Rock Lizards Tires (Race compound)
AX24004	Axial 27T Electric Motor
AX24250	AE-1 Forward/Reverse ESC

CrawlerX
A TREAD LINE FOR THE SERIOUS RACER

Part #	Description
AX24250	AE-1 Forward/Reverse ESC
AX30122	Aluminum Shock Body 12x55mm (2pcs.)
AX30198	Slipper Drive Gear Shaft 5x53.5
AX30213	Spring 14x90mm 1.32 lbs/in - Super Soft (Red)
AX30214	Spring 14x90mm 1.71 lbs/in - Soft (White)
AX30215	Spring 14x90mm 2.25 lbs/in - Medium (Green)
AX30216	Spring 14x90mm 2.78 lbs/in - Firm (Yellow)
AX30217	Spring 14x90mm 3.01 lbs/in - Super Firm (Blue)
AX30395	Heavy Duty Bevel Gear Set
AX30410	Inner Slipper Plate
AX30411	Outer Slipper Plate
AX30412	Slipper pad 27x8x1mm
AX30413	Slipper spring 8.5x12 165 lbs/in - Black (2pcs)
AX30414	AX10 Scorpion Slipper Clutch Set
AX30430	12mm Aluminum Hex Hub (Green)
AX30440	AX10 Scorpion Locker
AX30486	Optional AX10 Scorpion Battery/Servo Plate
AX30490	AX10 Scorpion Outrunner Motor Plate
AX30492	AX10 Scorpion Rear Steer Kit
AX30501	Driveshaft Ring (2pcs)
AX30494	Aluminum Rear Axle Lockout (2pcs)
AX30497	Servo Plate
AX30578	Pinion 48DP 20 T

Part #	Description
AX4000	Axial War Wagon Truck Body .060 Pre-Cut Clear
AX4001	Axial Baja Buzzard Truck Body .060 Pre-Cut Clear
AX4002	Axial Diablo Truck Body .060 Pre-Cut Clear
AX4004	B-17 Betty Truck Body (Clear)
AX4007	B-17 Betty Truck Body .040"-uncut (Clear)
AX4008	Axial Baja Buzzard Truck Body - .040" (Clear)
AX4014	Axial XC-1 Rock Crawler Body - .040" (clear)
AX4016	34 Rat Rod Truck (Clear)
AX4017	Axial Baja Buzzard Truck Body - .040" (Pre-printed) - Green
AX4018	Axial Baja Buzzard Truck Body - .040" (Pre-printed) - Orange
AX4019	Axial Baja Buzzard Truck Body - .040" (Pre-printed) - Blue
AX4021	Axial XC-1 Rock Crawler Body - .040" (Pre-printed) - Green
AX4022	Axial XC-1 Rock Crawler Body - .040" (Pre-printed) - Red
AX4023	Axial Body Stiffeners
AX8090	Axial 2.2 Rockster Beadlocks (White)
AX8091	Axial 2.2 Rockster Beadlocks (Black)
AX8092	Axial 2.2 Rockster Beadlocks (Chrome)
AX8095	Axial 2.2 Rockster Beadlocks (Black Chrome)
AX8096	2.2 8 Hole Beadlocks (White)
AX8097	2.2 8 Hole Beadlocks (Black)
AX8098	2.2 8 Hole Beadlocks (Satin Chrome)
AX8099	2.2 8 Hole Beadlocks (Black Chrome)
AXA1331	Flanged Ball 3x5.8x7mm (6pcs)

Warranty Info

Axial Limited Warranty (USA)

Your Axial product is warranted to be free of defects in materials and workmanship when new. This warranty does not cover damages due to normal wear and tear, user's failure to perform routine maintenance, user error of assembly or installation, user modifications, addition of aftermarket parts or option parts. This warranty lasts as long as the original purchaser owns the product, and is not transferable (Verified by dated itemized sales receipt). In the event of a defect under this warranty, Axial will, at our discretion, repair or replace the product, provided our inspection indicates that an original defect exists. Axial reserves the right to replace any product which is no longer available with a product of comparable value and function. If Axial determines the repair is not covered under warranty guidelines, there could be a charge applied for the repair and return shipping charges.

International Customers Warranty

Please return product to the dealer where the purchase was made. If your Axial product purchase was made through an on-line retailer, any warranty issues must be taken care of by that retailer. Axial assumes no responsibility for Axial products sold internationally by on-line retailers.

Service

If you need service on your Axial product here are some simple steps to follow when sending in product in for Warranty/ Repair.

STEP 1:
Contact Axial Customer Service at 949-600-8642 Ext: 206 to receive a Return Merchandise Number (RMA#). **Note:** Axial requires the RMA# to be placed on the return merchandise box when shipped to Axial.

STEP 2:
Please write a short note explaining the issue you experienced with the product.

STEP 3:
Include your return address with a daytime phone number and /or e-mail address.

STEP 4:
Please include a Money Order in the amount $10.00 made payable to Axial for return shipping costs although If product is found to be under Axial Warranty coverage, the $10.00 will be refunded to you.

PLEASE NOTE: Tuning issues are not covered under the Axial Warranty and shipping fee's do apply.

Please allow 5-10 working days for product to be returned. Axial ships using United Postal Service Priority mail or UPS Ground. Any expedited shipping must be arranged and prepaid by customer. Axial will not be responsible for lost or damaged packages.

Competition X
A WEB SITE FOR THE SERIOUS RACER

Notes

CompetitionX
A WEB SITE FOR THE SERIOUS RACER

Rock Lizards

#AX12010
Standard Compound

#AX12011
Race Compound

axial

Pro-Tools

#AX20008
Metric Set

#AX20009
Standard Set

- Ergonomically designed to fit in your hand more comfortably
- Color coded and laser etched for easier identification
- Hardened metal tips (replacements available)
- Lightweight molded handles
- Available in sets of 5 or individually
- Metric or Standard
- Ball drivers available

#AX20010

#AX20015

#AX20016

#AX20017

#AX20019

Posts & Spacers

Posts
- M3 Threaded Posts
- 10mm to 70mm
- Sold in Pairs

Spacers
- M3 Spacers
- 0.5mm to 6mm
- Sold in set of 6

Super Tough Axial Bodies

#AX4002
Diablo

#AX4000
War Wagon

#AX4001
Baja Buzzard

#AX4004
B-17 Betty

- Photorealistic die-cut premium vinyl decals and window masks
- **SUPER DURABLE** 0.060" clear polycarbonate plastic for long life
- **Pre-cut** body, just paint, apply decals, and drill mounting holes
- Includes 4 body clips and mounting hardware for the included wing
- Fits Savage Series and T-Maxx chassis

PRE-CUT!
Just Paint and GO!!

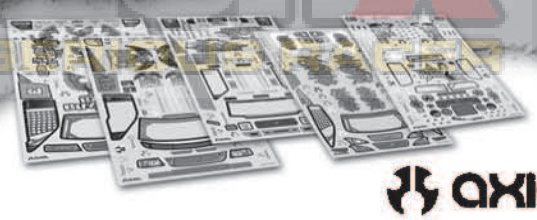

COMPETITION
A WEBSITE FOR THE SERIOUS RACER

axial

www.axialracing.com

21092 Bake Parkway, #114
Lake Forest, CA 92630
Tel: 949.600.8642
Fax: 949.600-8645

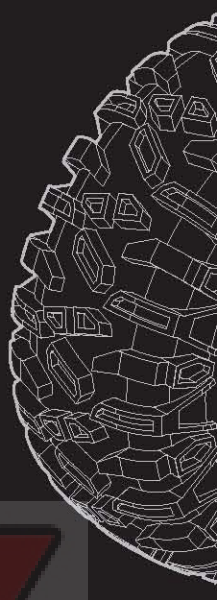

CompetitionX
A WEB SITE FOR THE SERIOUS RACER