**CENCHAIN CO., LTD.**
No.16, LANE 105, CHENG FU RD,
SANHSIA, TAIPEI HSIEN TAIWAN, R.O.C
TEL: 886-2-26681881
FAX: 866-2-26681899
E-mail: rchobby@ms11.hinet.net

**CEN RACING USA**
15332 E. Valley Blvd.
City of Industry, CA. 91746
Tel: 626-333-1777
Fax: 626-333-7727
E-mail: sales@cenracing.com

*Specifications are subject to change without prior notice.
*©All rights reserved.

www.cenracing.com

CEN

# Tools

The following tools are necessary to make assembly & maintenance of your new R/C car. both easier & more enjoyable. For your safty, exercise care when using any hand tools, sharp instruments, or power tools during construction. Always use safty glasses. If you have any questions, please consult your local hobby shop or experienced friend.

***Hexagon wrench***
1.5mm, 2mm, 2.5mm,3mm.

***Cross wrench*** (hexagon socket tools)
5.5mm, 7mm, 8mm, 10mm, 12mm, 17mm.

***Hobby scissors***
For cutting and trimming the car's body, decals.

***Grease***
Lubrication of gears; reduces friction.

***Glue***
Use to glue tires onto the wheels; temporary repairs.

! Always use hand and eye protection with cyanoacrylic glue.

***Threadlock***
For locking screws and nuts to prevent loosening.

***Hobby knife***
Use for trimming and cutting.

! This knife cuts plastic and fingers with equal ease, so be careful

***Flat blade screwdriver***

***Phillips screwdriver***

***Needle nose pliers***
Clamping parts during assembling and disassembling

***Hand drill***
2mm, 3mm, 6mm.

Soldering iron (40~50 watts) and a small amount of solder.

! Be careful iron is very hot

***Liquid dish soap***

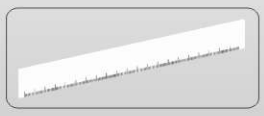

***Ruler***

# SAFETY PRECAUTIONS

- This radio controlled model is not a toy. For yours and others safty, the following guidelines and cautions should be followed carefully.
  **WARNING:** Do not operate R/C car in the following locations:
  1. Street
  2. Crowded area; keep away from children.
  3. Indoors or an unventilated room.

  **SUGGESTION:** Outside in a large open area without obstructions; R/C race track.
- This kit uses many kinds of small parts, sharp tools, large polybag, and chemical materials. Please keep these and other potentially harmful items away from children.
- Use only FCC approved ground frequency crystals in the R/C unit.
- Do not operate a Gas powered car in a residential area. The noise could disturb the peace.
- If you are operating several cars together, check the frequencies to make sure none are the same. Operating the cars on the same frequency can cause radio interference and loss of control of the car.
- If the car is not operating properly, stop immediately and check the condition of the car.
- To avoid damage to the R/C equipment, or losing control of the car, avoid running in or near water.
- To always maintain control of your car and to avoid a jump start, Please do the following:
  1. ON - First turn on the transmitter, then the car's receiver. 2. OFF - Turn off the car's receiver, then the transmitter.
- Do not touch the R/C car after operation, as the engine, muffler, electric motor, battery, and speed controller will be very hot! Allow to cool before handling. While charging your car's battery, it could become hot. Carefully read your battery charger's instructions for proper use.
- When the R/C car is in operation, do not touch any of its moving parts such as drive shafts, wheel ,etc., as the rotating parts can cause serious injury.
- After operation of the R/C car, it is necessary to remove the battery for protection of the R/C equipment.
- Paint and grease are extremely flamable, keep away from sources of ignition. Do not puncture or throw away spray paint cans into garbage.

CompetitionX
A WEB SITE FOR THE SERIOUS RACER

# 01 Shock Assembly

### *01-01 Shock Shaft* ( Front*2 , Rear*2 )

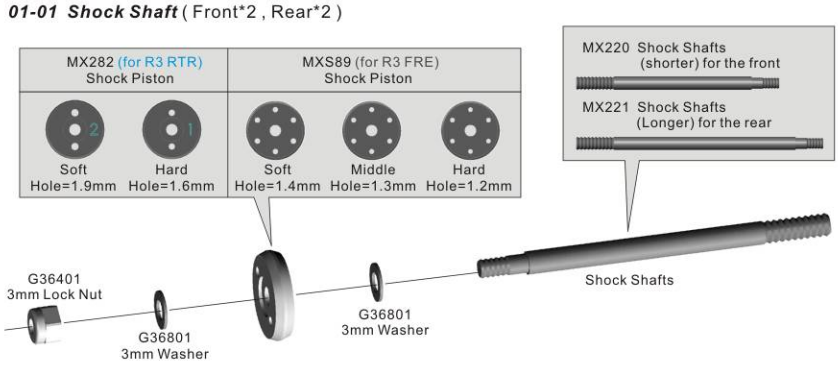


### *01-02 Shock Body* ( Front*2 , Rear*2 )

Fill the shock with more oil to the top.

**Matrix R3 RTR**

01-03 Front*2 , Rear*2

1. Fill the shock body up to the top with oil.
2. Slowly push the shock shaft in and out to remove all air bubbles. If oil level drops do not let the piston come out of the oil.
3. Once you have all the air bubbles worked out.
4. Put the rubber diaphragm on ,then slowly tighten down the shock cap.
5. Loosen the shock cap 1/2-3/4 turn and slowly press the shock shaft all the way in.
6. With the shock shaft pressed all the way in tighten down the shock cap.
7. Shocks should feel smooth. If you feel air bubbles, remove cap and add more oil, then repeat. If shock shafts don't go all the way in you need to bleed a little more oil out.

| Option Spring | MXS87 Pink Medium | MXS88 Green Hard |
|---|---|---|
| Springs (Longer) for the rear | | |
| Springs (Shorter) for the front | | |

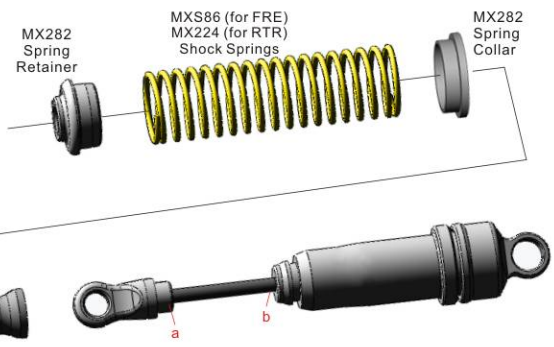


01-04 Front*2 , Rear*2

1. Clip the spring retainer onto the lower shock eyelet carefully securing the bottom of the shock boot at the same time.

* Use the Preload spacers on the shocks for adjusting the preload of the springs.(If needed)

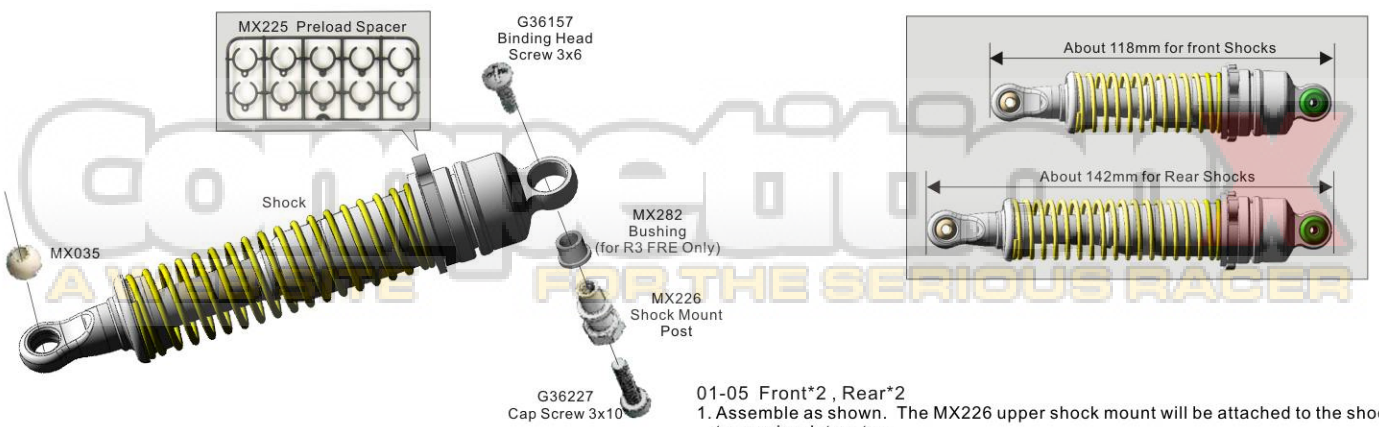


01-05 Front*2 , Rear*2

1. Assemble as shown. The MX226 upper shock mount will be attached to the shock towers in a later step.

AVAILABLE FOR THE SERIOUS RACER

# 02 Center Differential

02-01 *1

1. Follow the diagram for the front and rear differential assemblies.

02-02 *1

1.Insert the MX231 differential Planet gears onto the cross pins making sure that they spin freely on the shafts.
2.Next slide on the washers behind each differential Planet gear (FRE Only).
3.Slide the cross pins with the differential Planet gears down into the differential case.
NOTE: the differential case has specific grooves in which the cross pins must slide into.

02-03 *1

1. Follow diagram for Cross Pin and Diff Planet Gear then slide into the diff housing.
2. Rotate the outdrive to check for smooth operation.

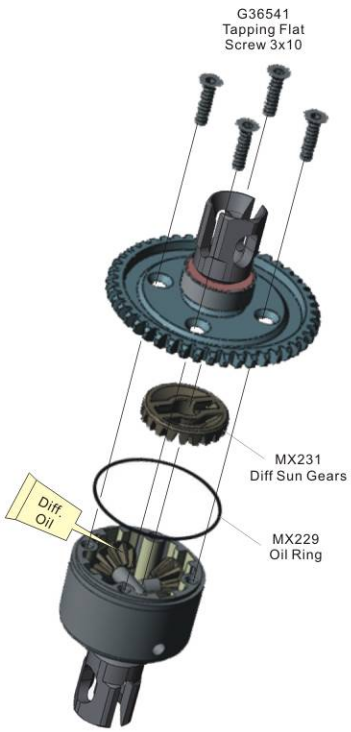


# 02 Front and Rear Differential

02-04 *2

1. Fill the housing up with oil just slightly below the top of the gears.
2. Secure the diff case cover using four 3x10 screws.
3. Make sure differentials are smooth.

02-05 *2

1.Insert the MX231 differential Planet gears onto the cross pins making sure that they spin freely on the shafts.
2.Next slide on the washers behind each differential Planet gear (FRE Only).
3.Slide the cross pins with the differential Planet gears down into the differential case.
NOTE: the differential case has specific grooves in which the cross pins must slide into.

02-06 *2

1.Using four G36541 screws, secure the differential ring gear to the differential case.
NOTE: Do not over tighten the screws as this may strip the holes and cause leaking.

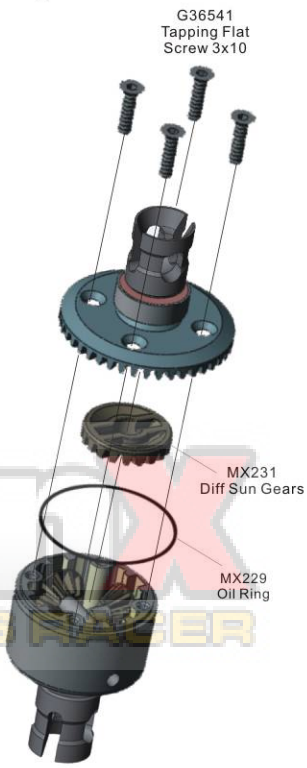


FOR THE SERIOUS RACER

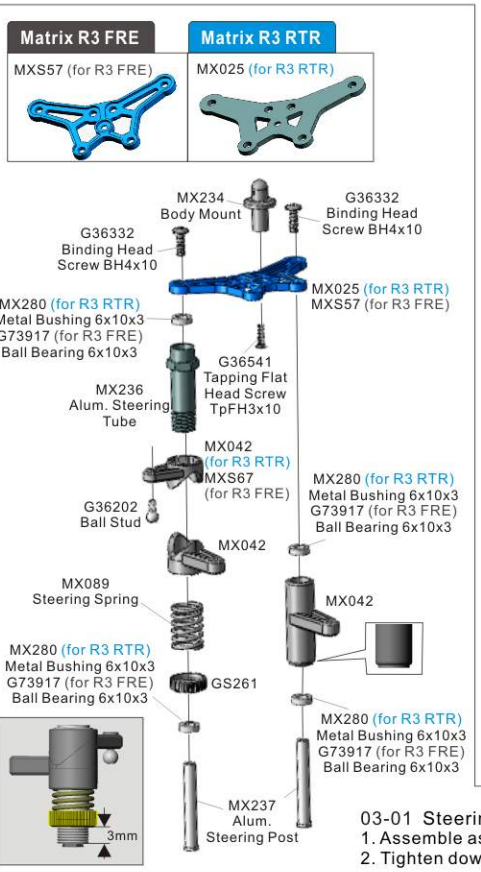


03-01 Steering Assembly
1. Assemble as shown in the diagram.
2. Tighten down the servo saver nut until you have about 6mm of threads showing.

03-02 Steering Rod*2
1. Thread two rod ends onto the tie rod.
Make sure both eyelets are screwed on evenly.
2. Gently press one GS017 ball into each eyelet.

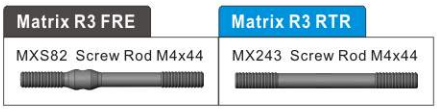


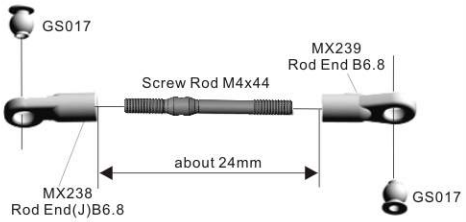


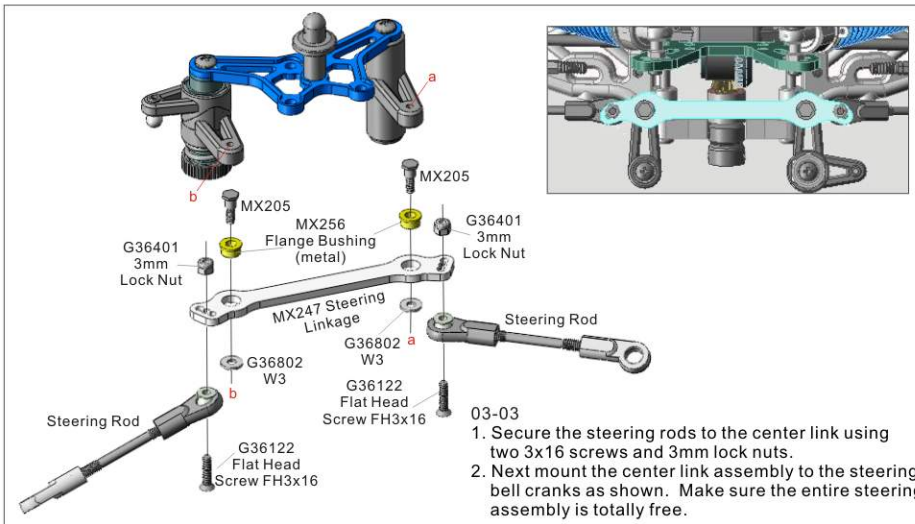


03-03
1. Secure the steering rods to the center link using two 3x16 screws and 3mm lock nuts.
2. Next mount the center link assembly to the steering bell cranks as shown. Make sure the entire steering assembly is totally free.

03-04 Upper Arm*2
1.Thread the Screw Rod into the upper arm and eyelet.
*We recommend you take a look at the thread pattern and get them to match from left to right.
Be sure do not overtighten
2.Repeat one more time.

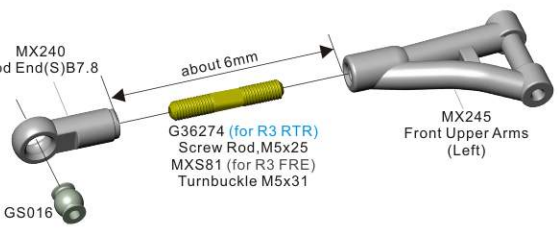


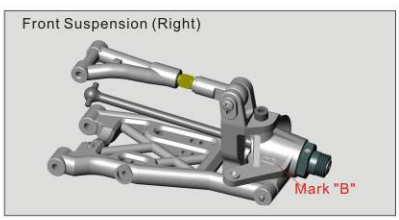


03-05 Front Suspension (Left)
1. Assemble the left front suspension assembly as shown.
2. * We recommend you use thread lock on the four 4x10 screws going into the MX008 aluminum spindles.
3. Screw the 4x12 down travel set space screw in until the bottom is flush with the arm. We will make final adjustments later.

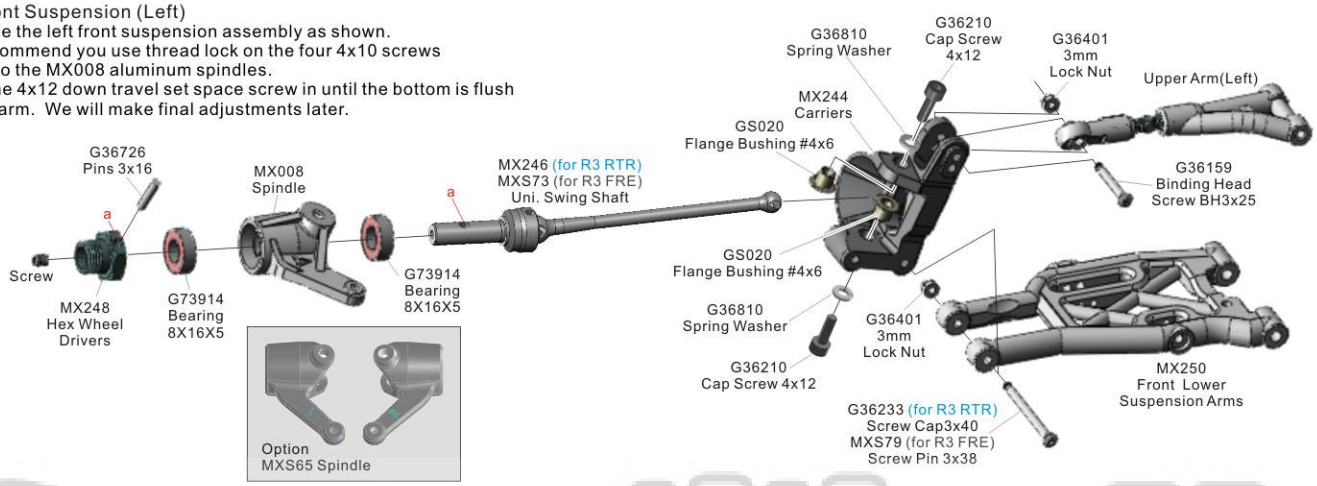


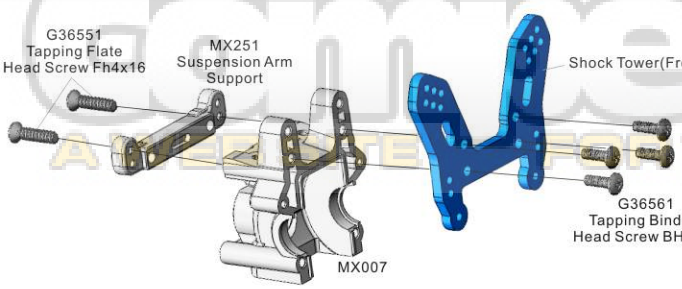


03-06 Front Bulkhead
1. Mount the upper suspension arm support to the MX007 front bulkhead using two screws.
2. Secure the Front shock tower to the bulkhead using four 4x12 button head screws.

ARTICLE FOR THE SERIOUS RACER

### 03-07 Front Bulkhead

1. Insert two 8x16x5 bearings into the front bulkhead as shown.
2. Insert the MX255 driving gear through both 8x16x5 bearings followed by your differential.
   * Look for a small arrow on the bottom of the bulkhead; this is the side the differential gear should go on.
3. Seal the front bulkhead using two 3x18 screws.

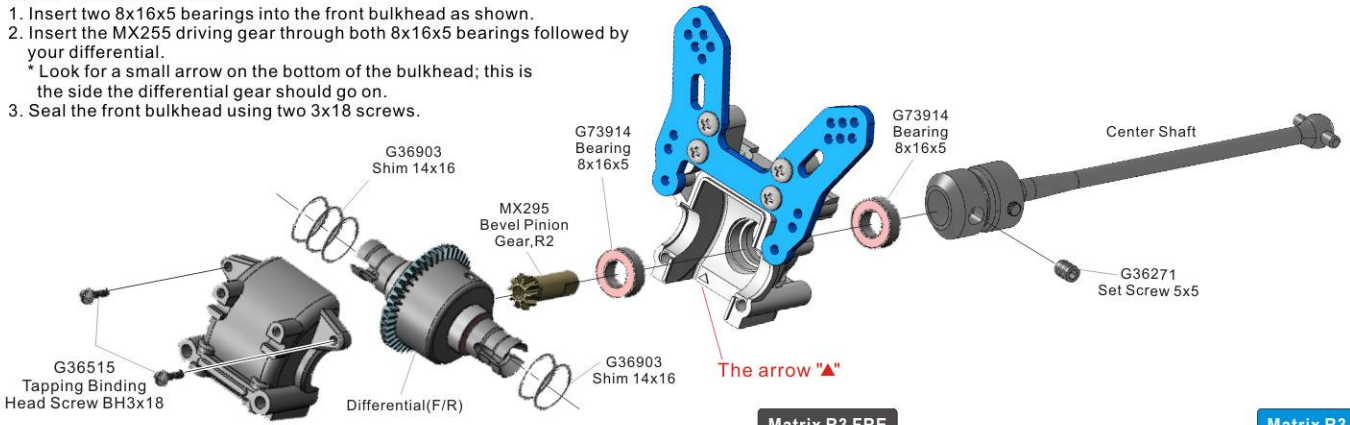


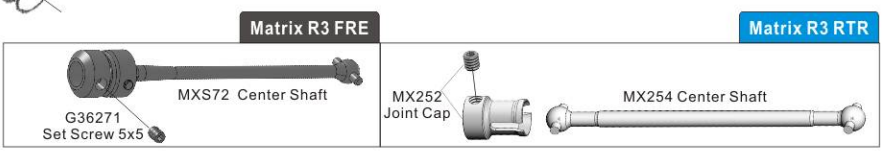


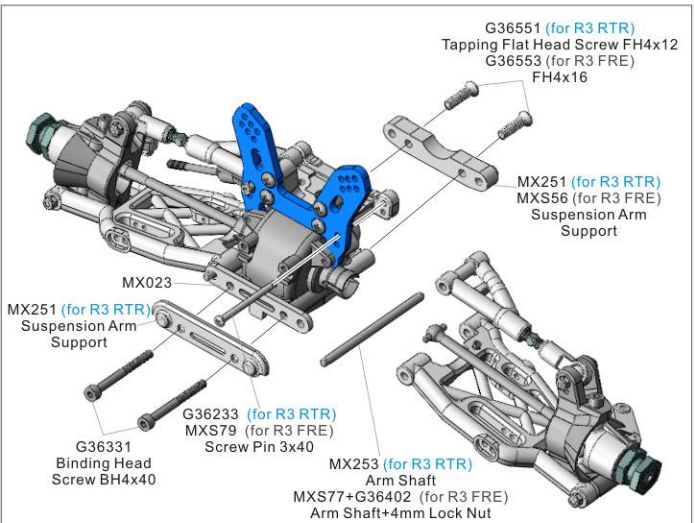


### 03-08 Front Suspension

1. Attach the front left suspension arm assembly to the front bulkhead as shown.
   The short pin is used for the upper arm and the longer pin for the lower arm.
2. Repeat for other side.

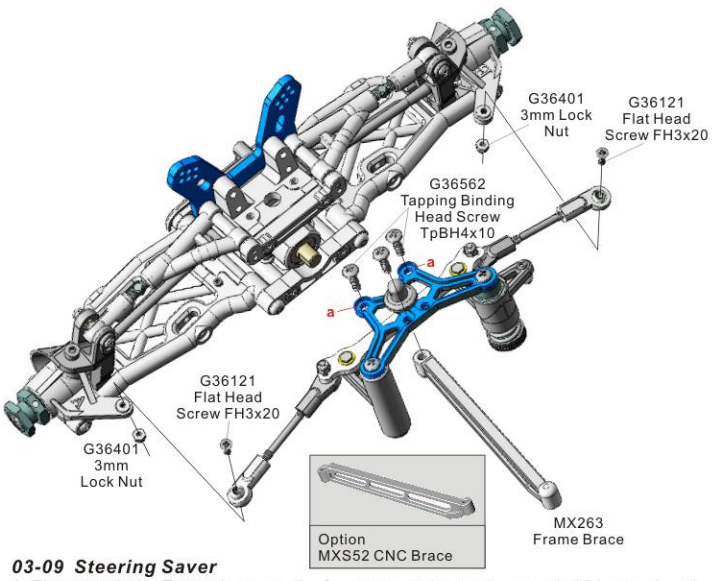


### 03-09 Steering Saver

1. First attach the Frame brace to the front upper plate using one 4x10 button head screw.
2. Attach the steering assembly to the front bulkhead using two 4x10 screws.
3. Finish this step by mounting the steering rods to the spindles using 3x20 screws and lock nuts.

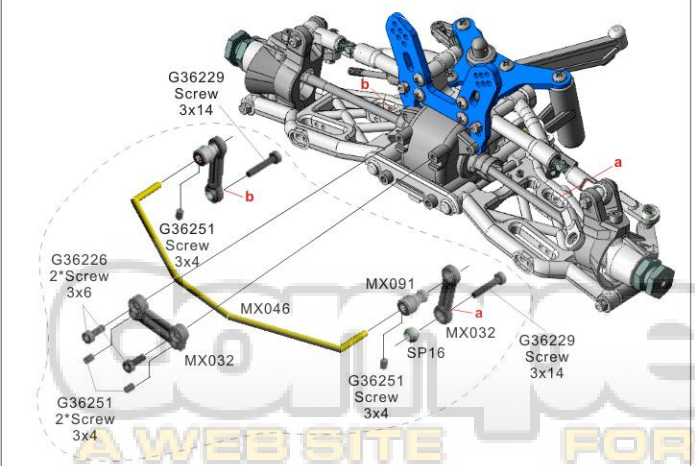


### 03-10 Front Sway Bar ( Included with FRE ONLY )

1. Assemble the sway bar as shown.
2. Don't tighten down the setscrews until sway bar is fully installed. Then with everything sitting flat, tighten the setscrews.

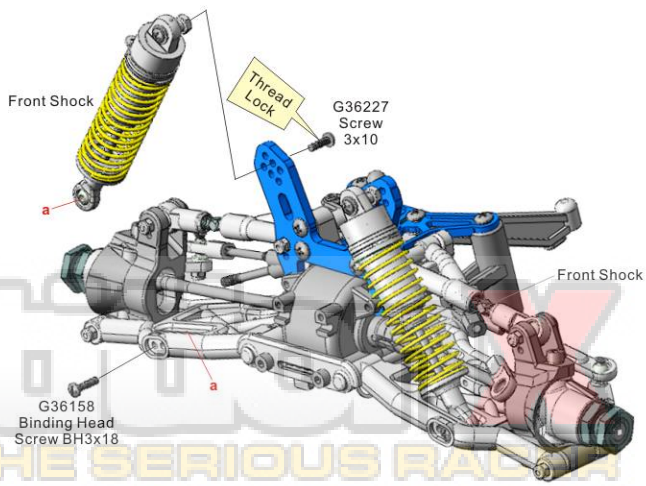


### 03-11 Front Shock

1. Mount the shocks to the upper shock tower using 3x10 screws. We suggest using the upper inside hole.
2. Mount the lower shocks to the suspension arms using 3x18 screws. We suggest using the outside hole on the arm.

A WEB SITE FOR THE SERIOUS RACER

### 04-01 Rear Bulkhead

1.Secure the shock tower to the bulkhead using four 4x12 button head screws.
2.Secure the arm support to the bulkhead using two screws.

**Matrix R3 FRE**

MXS93 Rear Shock Tower

**Matrix R3 RTR**

MX020 Rear Shock Tower

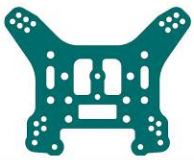

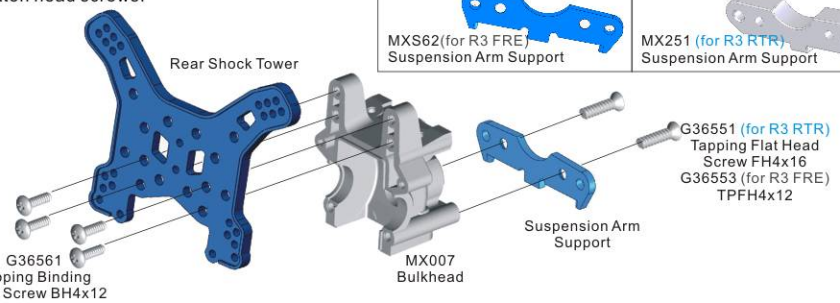


**Matrix R3 FRE**

MXS62(for R3 FRE)
Suspension Arm Support

**Matrix R3 RTR**

MX251 (for R3 RTR)
Suspension Arm Support

### 04-02 Rear Bulkhead

1. Insert two 8x16x5 bearings into the rear bulkhead followed by the MX255 driving gear.
2. Insert the rear differential into the housing making sure the gear is on the side with the arrow on the bottom of the case.
3. Close the case with the second half and two 3x18 screws.

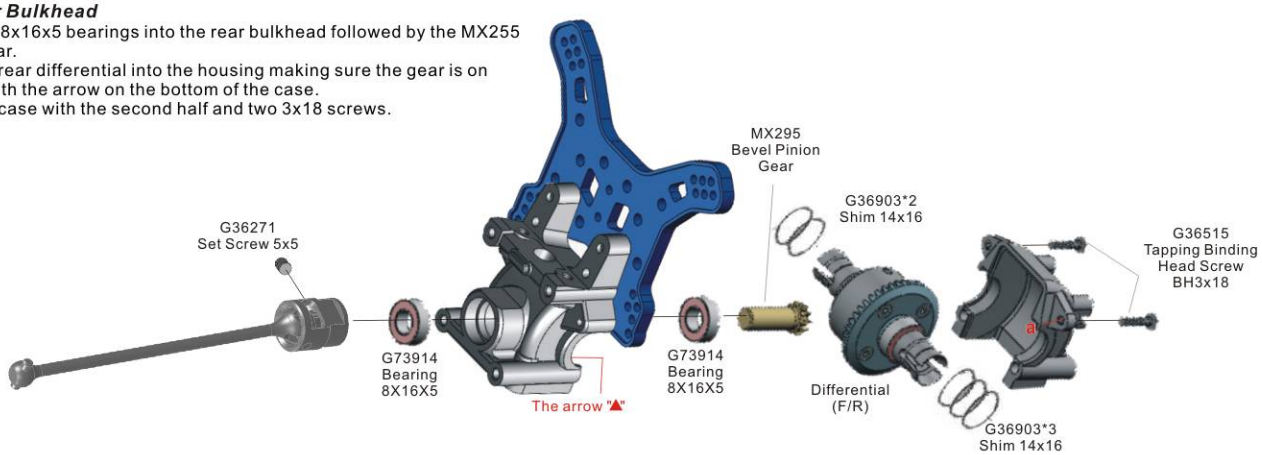


**Matrix R3 FRE**

MXS72 Shaft

**Matrix R3 RTR**

MX329 Center Shaft

MX252
Joint Cap

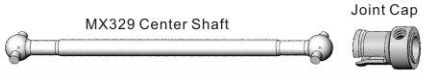

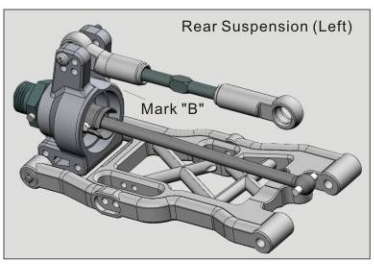


### 04-04 Rear Suspension (Right)

1. Assemble the driveshaft as shown.
2. Press Two 8x16x5 bearing into each side of the MX260 hub.
3. Insert assembled driveshaft through the bearings and the hub.
4. Align the MX248 wheel hex with axle and press pin in. Secure with set screws.
5. Attach the assembled hub assembly to the lower suspension arm using one hinge pin, spacer and 3mm Lock Nut. Make sure the spacer is towards the back of the car.
6. Secure the upper rod to the hub using one 3x25 screws and 3mm lock nut.
7. Repeat for left side.

**Matrix R3 FRE**

MXS74 Uni. Shaft

**Matrix R3 RTR**

MX258 Dogbone

MX259 Wheel Axle

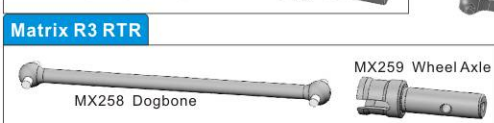

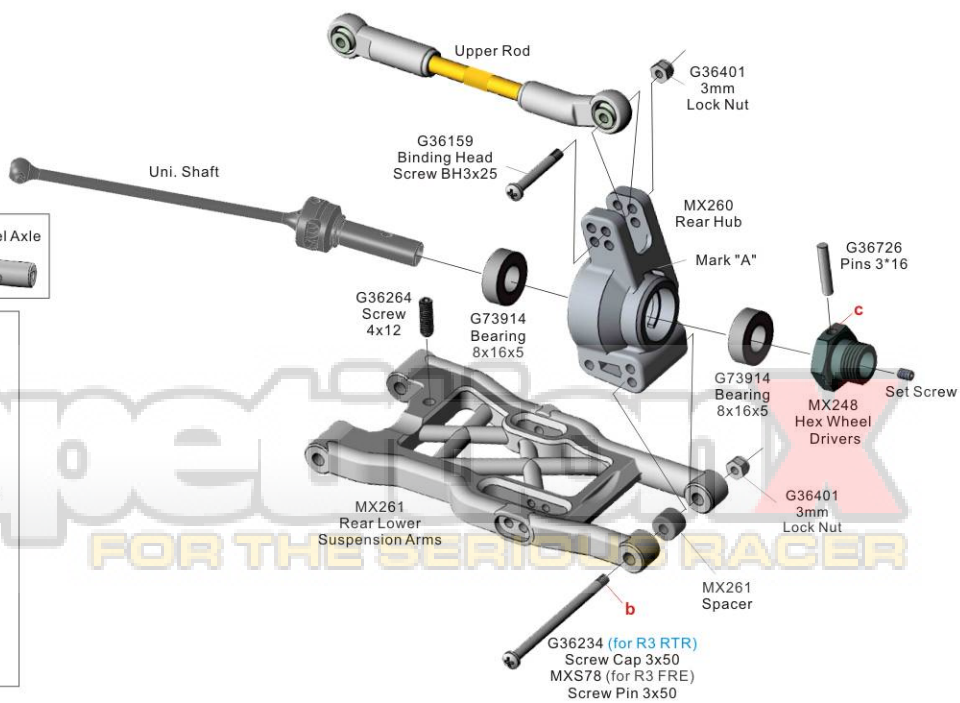


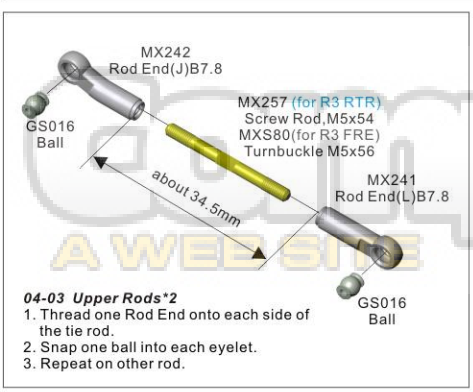


**04-03 Upper Rods*2**

1. Thread one Rod End onto each side of the tie rod.
2. Snap one ball into each eyelet.
3. Repeat on other rod.

A WEB SITE FOR THE SERIOUS RACER

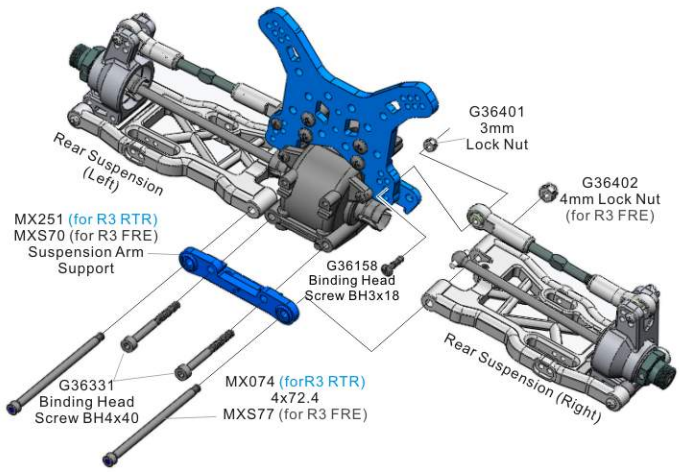


***04-05 Rear Suspension***

1.Attach the rear suspension arms to the rear bulkhead as shown.
2.Secure assembly using two 4x40 screws.

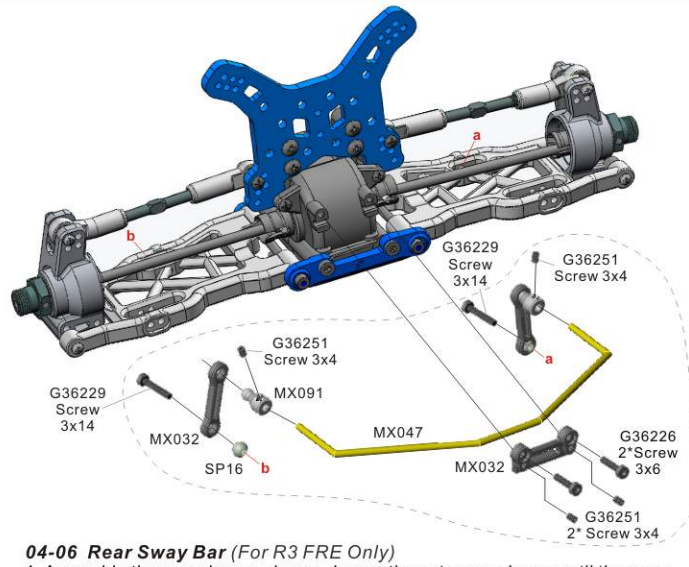


***04-06 Rear Sway Bar*** *(For R3 FRE Only)*

1. Assemble the sway bar as shown. Leave the setscrews loose until the sway bar is secure.
2. Once you have all everything correctly secured, lay the car on a flat surface. Then tighten down the setscrews.

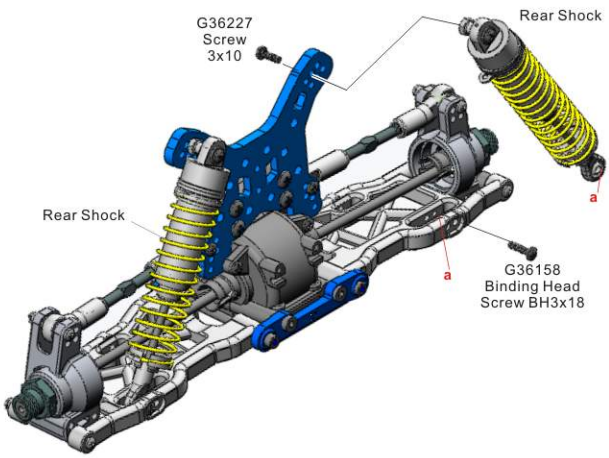


***04-07 Rear Shock***

1. Secure the shocks to the shock tower using two 3x10 screws. We suggest using the upper inside hole.
2. Mount the shock to the outer hole on the suspension arm using 3x18 screws.

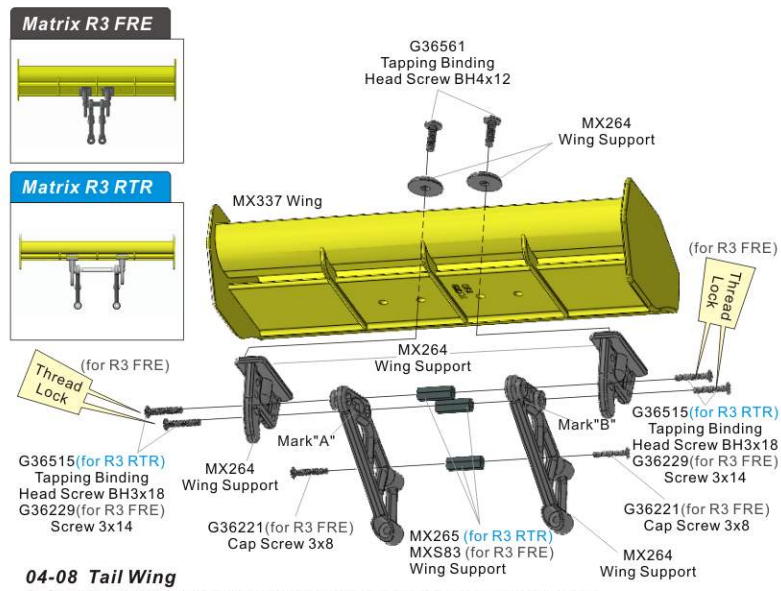


***04-08 Tail Wing***

1. Start by putting some screws through the wing mount and the wing support, screwing into the wing braces.
2. Repeat for other side.
3. Secure the MX015 wing to the wing assembly using two 4x12 screws and MX264 plastic washers.

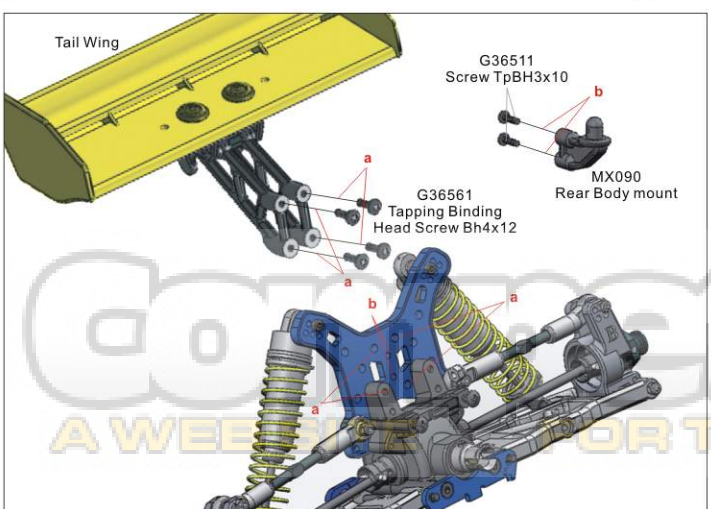


***04-09 Tail Wing***

1. Mount the entire wing assembly to the rear shock tower using four 4x12 button head screws.

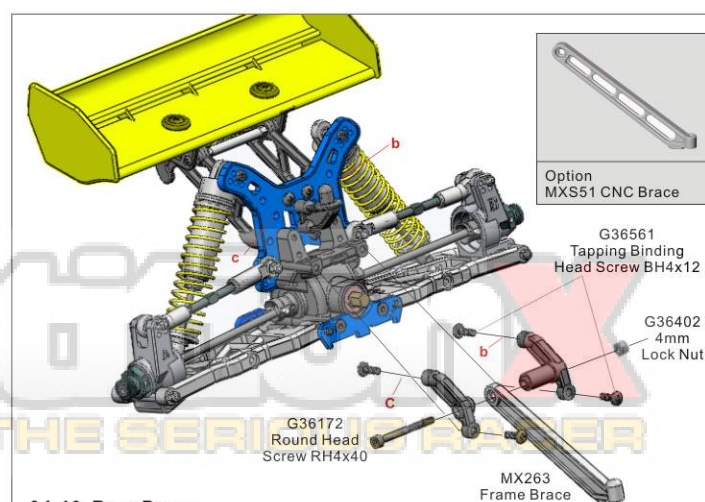


***04-10 Rear Brace***

1.Mount the rear body mount to the shock tower using two 3x10 screws.
2.Mount the rear chassis brace between the two chassis support brackets as shown.
3.Secure the brackets to the rear end using four 4x12 screws.

Connection
A WEEKLY FOR THE SERIOUS RACER

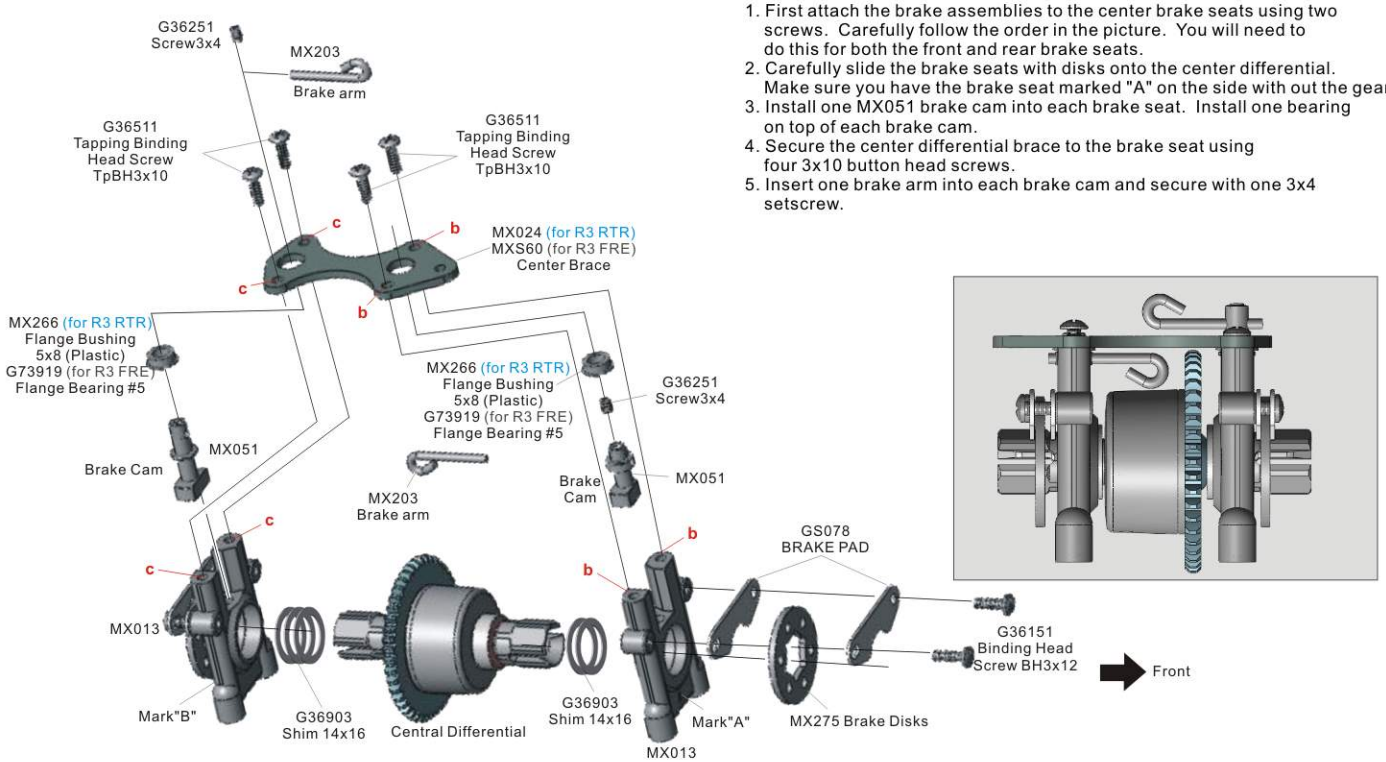


### 05-01 Center Gear

1. First attach the brake assemblies to the center brake seats using two screws. Carefully follow the order in the picture. You will need to do this for both the front and rear brake seats.
2. Carefully slide the brake seats with disks onto the center differential. Make sure you have the brake seat marked "A" on the side with out the gear.
3. Install one MX051 brake cam into each brake seat. Install one bearing on top of each brake cam.
4. Secure the center differential brace to the brake seat using four 3x10 button head screws.
5. Insert one brake arm into each brake cam and secure with one 3x4 setscrew.



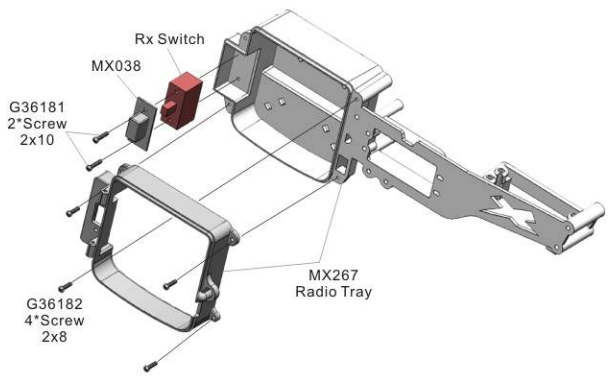


### 05-02 Radio Tray

1. Mount your on/off switch using two 2x10 screws and MX038 rubber cover into the upper half of the receiver box.
2. Secure the two sides of the receiver box together using four 2x8 screws.

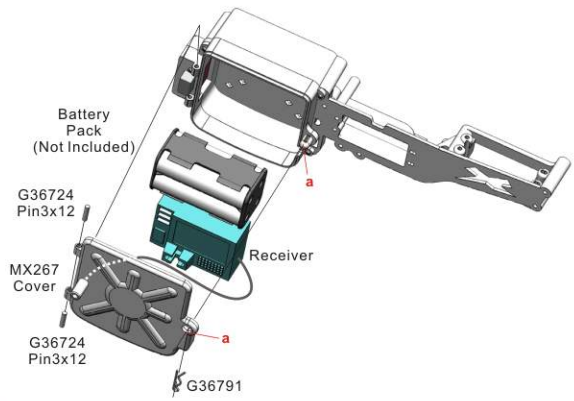


### 05-03 Radio Tray

1.Align the receiver box lid and box and press the 2x12 pins into each side of the hinge.
2.Install your receiver and battery and secure lid with a single body clip.

### 05-04 Radio Tray

1. Secure your steering servo to the servo bracket with four 3x14 screws.
2. Next mount your throttle servo using just Four 3x14 screws.

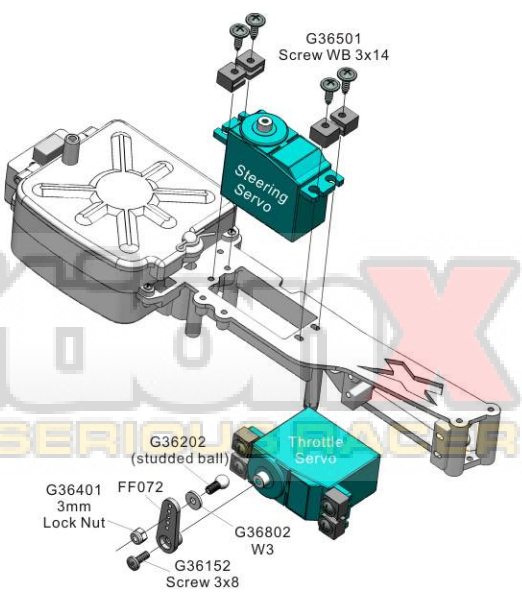


Competition
A WEB SITE FOR THE SERIOUS RACER

### 06-01 Engine Mount

1. Secure two engine mounts to your engine using four 3x14 screws.
   * Carefully look at each mount and you will see that the distance from the edge to the hole is different on each side. Make sure the edge with the shorter distance to the hole is closest to the rear (pull start side) of the engine.
   * Thread lock recommended on these screws.
2. Install your glow plug if it has not been done already for you at this time.

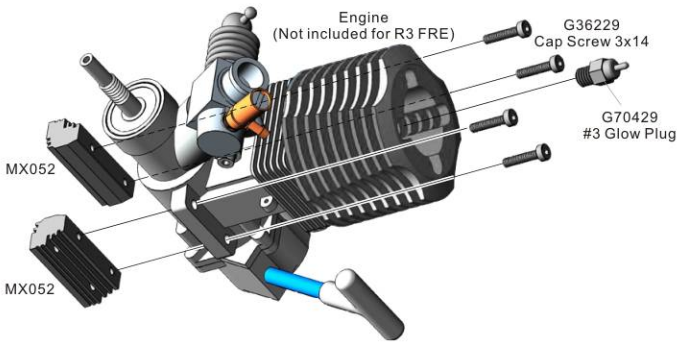


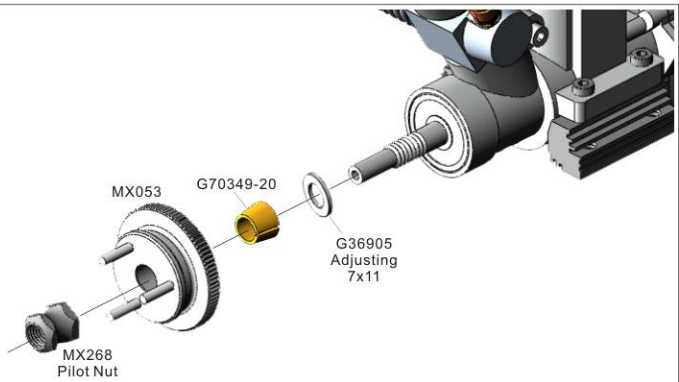


### 06-02 Flywheel

1. Slide one 7x10 shim onto the crankshaft followed by the cone.
2. Slide the flywheel onto the crankshaft centering it on the cone.
3. Grip the flywheel with large pliers and tighten the pilot nut down.
   * You want to make sure this is very tight.

### 06-03 Clutch Shoes

1. Install one clutch spring into each shoe as shown.
2. Put the shoe with the spring onto the pin found on the flywheel.
3. Once it's about 1/2 way down the pin, you will need to pull the small part of the spring back and press the shoe all the way down onto the flywheel. The small part of the spring should sit in the groove on the pilot nut.
   *Recommend using a small flathead screwdriver or needle nose pliers.

| Option | |
|---|---|
| | MXS20<br>CNC Alum.<br>3P Clutch Shoes |
| | GSS16<br>CNC Clutch Shoes<br>(Heavy) |

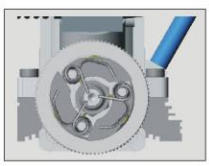

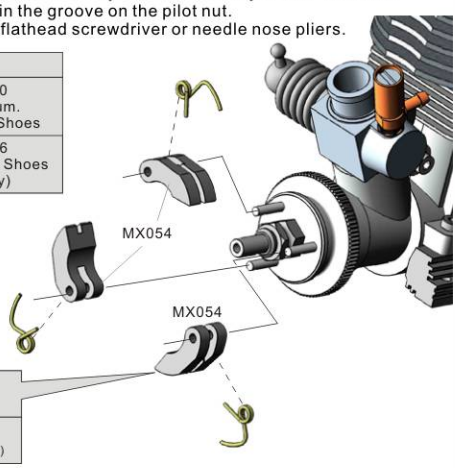


| | | |
|---|---|---|
| | Black | MX029 |
|  | Gold | MXS21<br>(Not included) |

### 06-04 Clutch Bell

1. Install three 7x10 shims onto the pilot shaft.
2. Press two bearings into the clutchbell then slide onto pilot shaft.
3. Secure with one #3 washer and 3x8 screws.
4. Make sure the clutchbell spins freely. If it's not completely free take apart and remove one of the 5x7 shims. Repeat if needed.

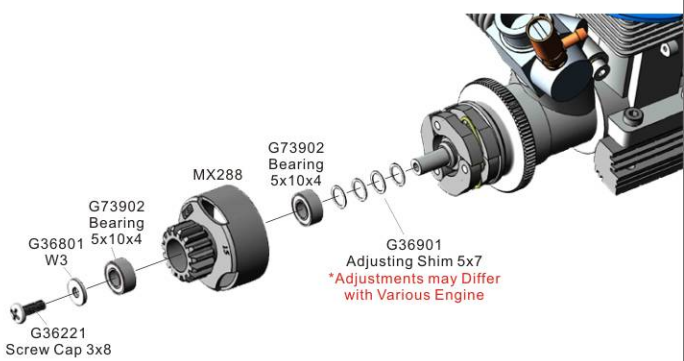


### 06-05 Muffler

1. Connect the manifold and pipe together using three small springs.
2. Put the exhaust seal onto your engine and then carefully put the manifold and pipe onto your engine.
3. Use the supplied retaining springs to hold the exhaust onto your engine.
4. Secure your air filter to the engine using a zip tie.

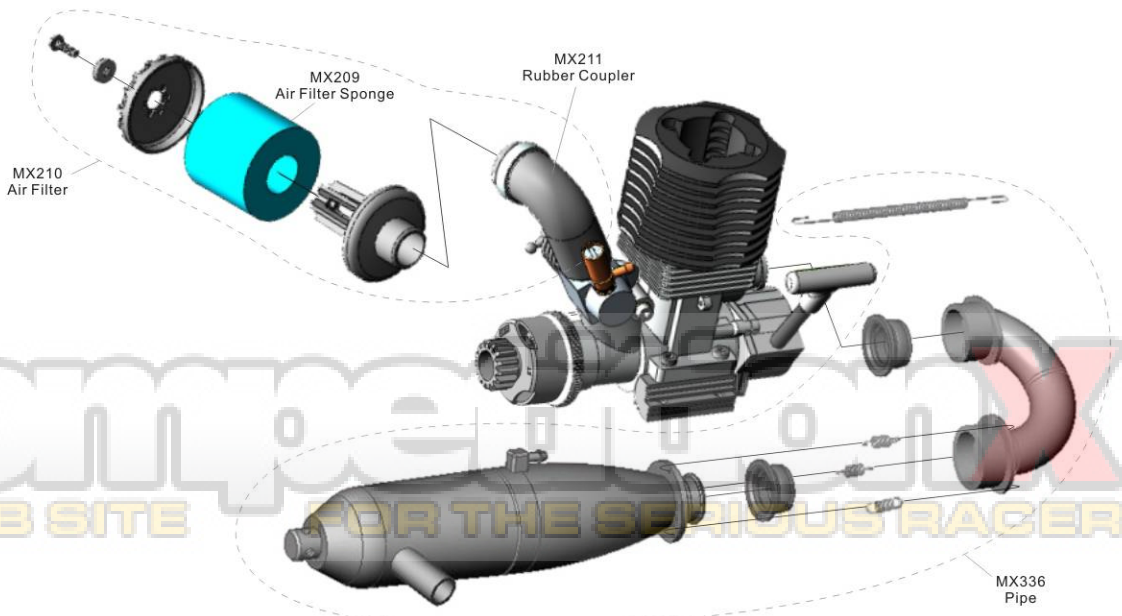


Competition
A WEB SITE FOR THE SERIOUS RACER

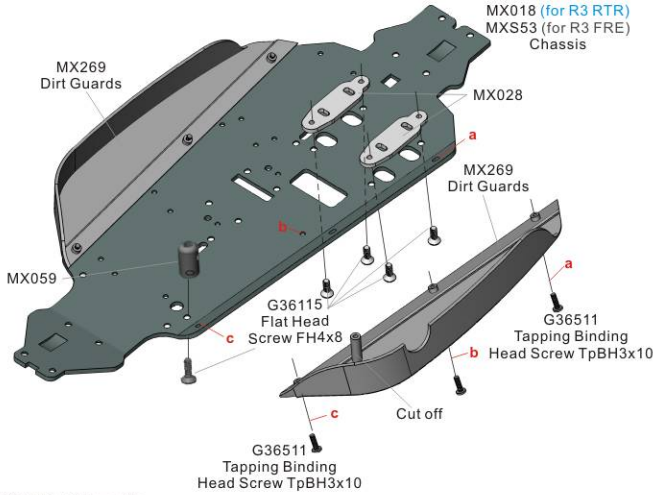


***07-01 Chassis***

1. Mount the side dirt guards to the chassis using some 3x10 screws.
2. Mount the engine mounting plates to the chassis using four 4x8 screws.
   * Recommend thread lock on these screws.

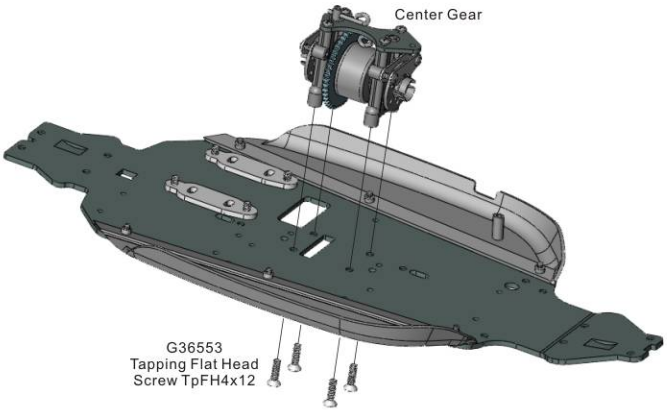


***07-02 Chassis***

1. Mount the center differential assembly to the chassis using four 4x12 screws. Make sure the brake disks are lined up correctly with the grooves in the diff mounts.

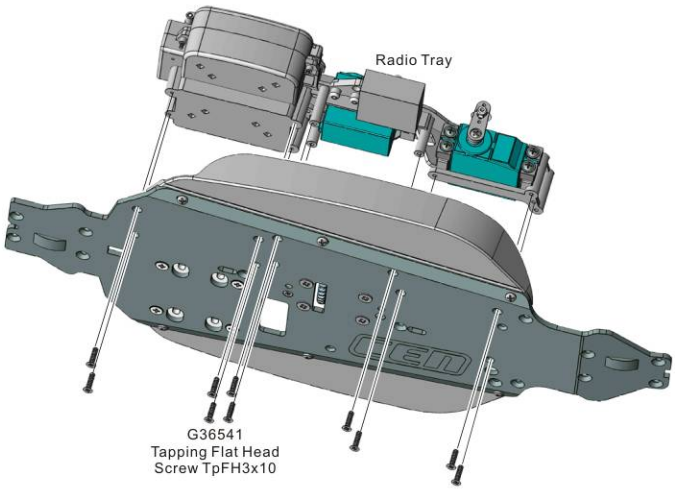


***07-03 Chassis***

1.Mount the radio tray assembly to the chassis using ten 3x10 screws.

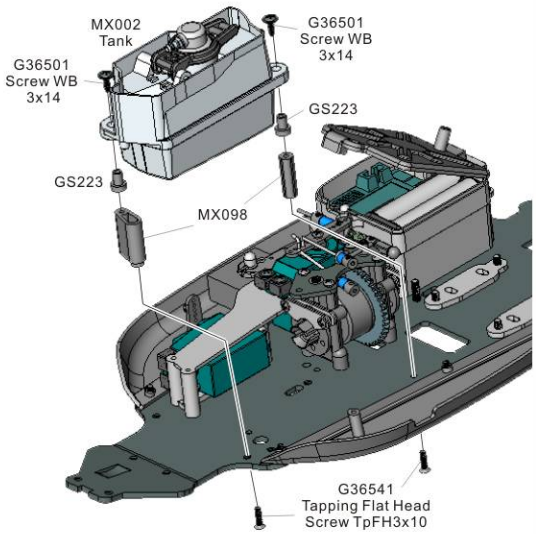


***07-04 Chassis***

1. Mount the fuel tank brackets to the chassis as shown using two 3x10 screws.
2. Using two rubber mounts and two 3x14 screws secure the tank to the brackets.

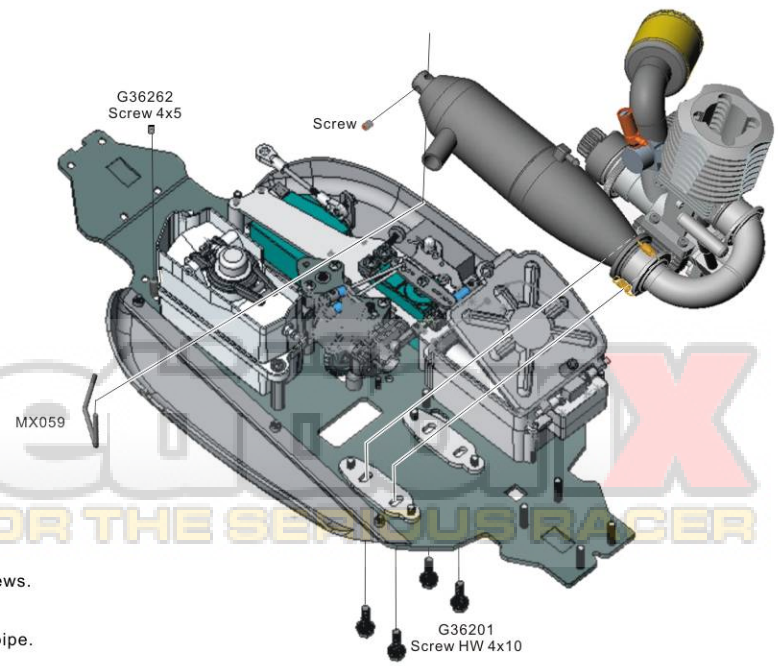


Competition RX
A WEB SITE FOR THE SERIOUS RACER

***07-05 Engine***

1. Mount the engine assembly to the chassis plates using four 4x10 screws.
   * Thread lock is recommended.
2. Secure the pipe using the pipe mount. Insert one side through the hole on the chassis mount and the other end through the hole on the pipe.
3. Secure with setscrew.

### 08-01 Rear End

1. Line up the rear center driveshaft into the center differential then secure to chassis. Make sure you use the longer 4x16 screws for the rear holes and the shorter 4x12 screws for the forward holes and chassis brace.

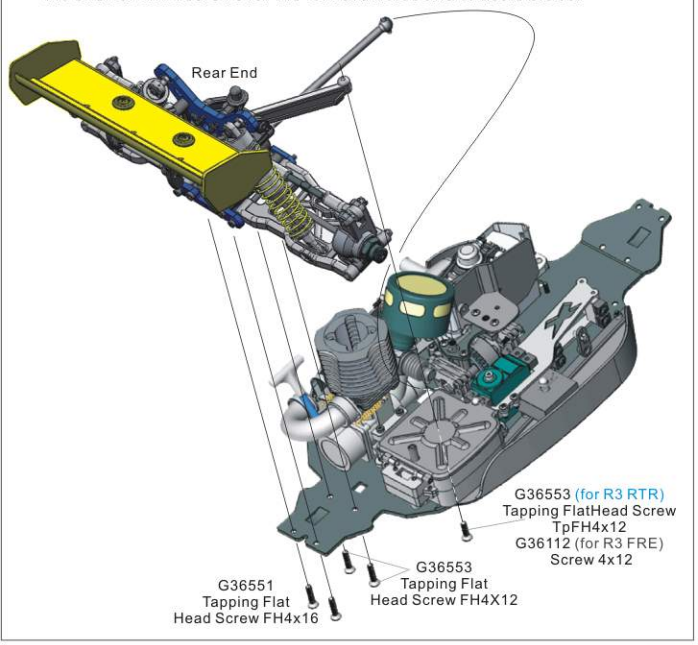


### 08-02 Front End

1. First line up the front center driveshaft into the center differentials outdrive then mount front end to the chassis.
   * Makes sure you use the correct screws as shown in the diagram. Use the two long 4x16 screws in the front holes making sure you have the bumper correctly installed first.
   * Use five 4x12 screws for the steering posts, chassis brace, and the rear bulkhead.

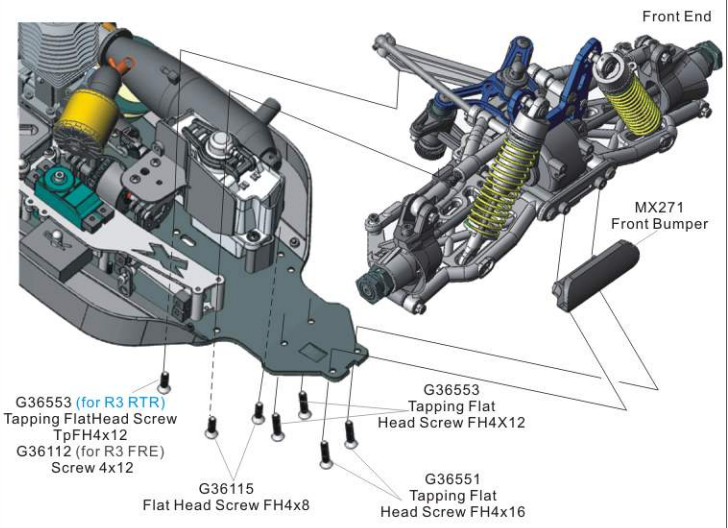


### 08-03 Con-Rod

1. Install all the throttle linkage as shown in the diagram.
   *First put the brake rods through the brake levers and put the MX022 cone, spring and collet and then tighten down the setscrew. Do this with both brake rods.
2. Secure the throttle rod to the servo arm using one 2x10 screw . Snap the throttle rod onto the ball located on the carburetor.
3. Secure the brake bracket assembly to the servo arm using two 2x8 screws.
4. Mount the servo arm to the throttle servo using the screw supplied with your servo.
5. Snap both sides of the steering rod onto the ball stub on the servo arm and steering bell crank.
6. Adjust the length of the steering rod so the steering bell cranks is 90' to the side and the servo arm is straight up.

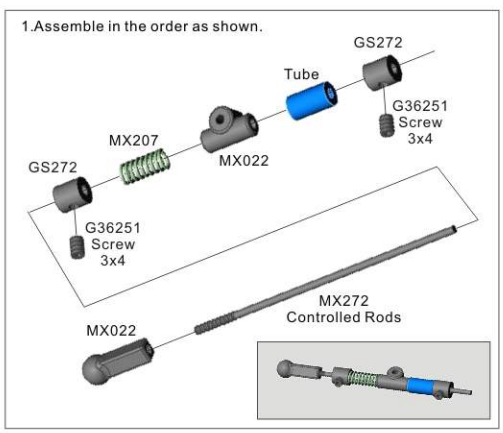


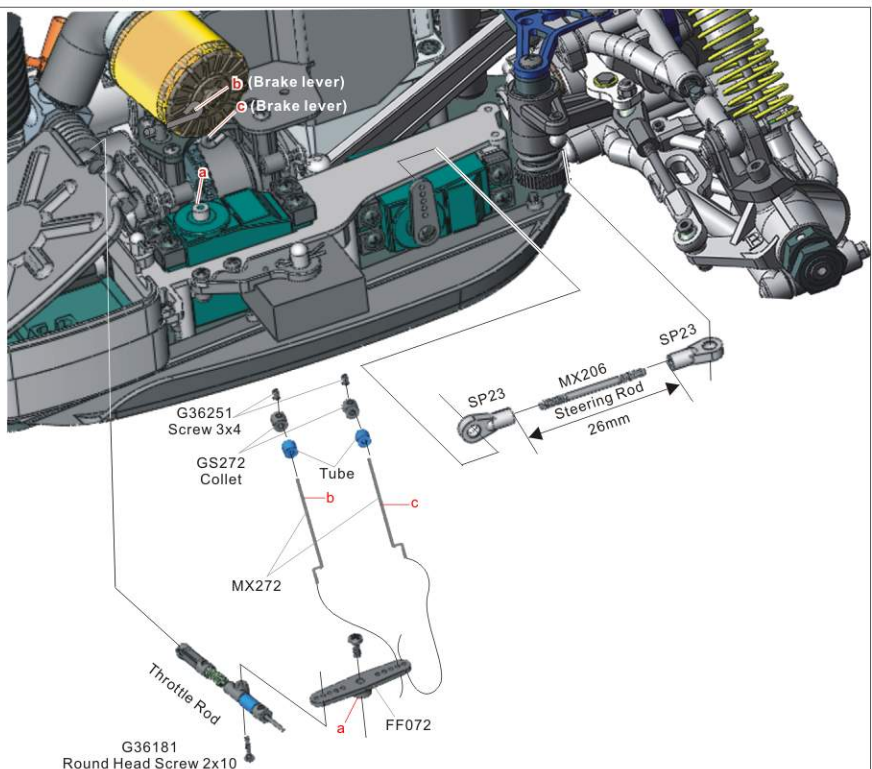


### 08-04 Wheel*4

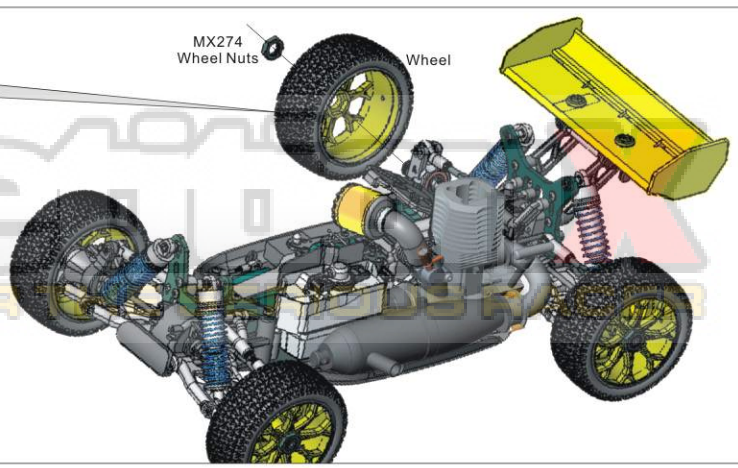


### 08-05 Wheels

1. Mount the foam inside the tire then glue to the wheel using C.A. glue.
2. Allow glue to fully dry then secure to the car using wheel nuts.

A WEB SITE FOR

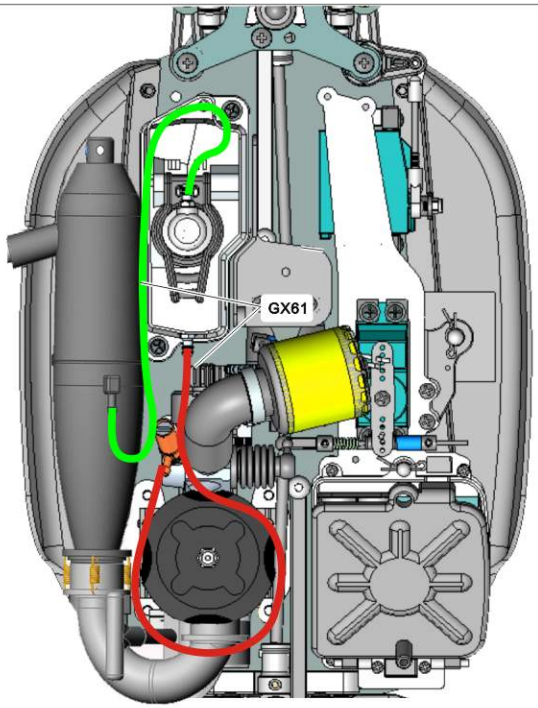


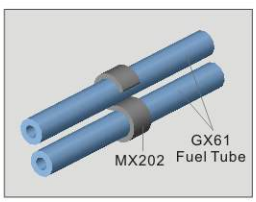


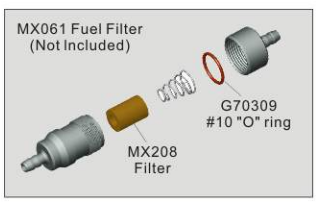


***08-06 Fuel Tube***

1. This is the correct layout for your fuel line. Make sure the fuel line coming from the pipe goes into the lid of the tank.

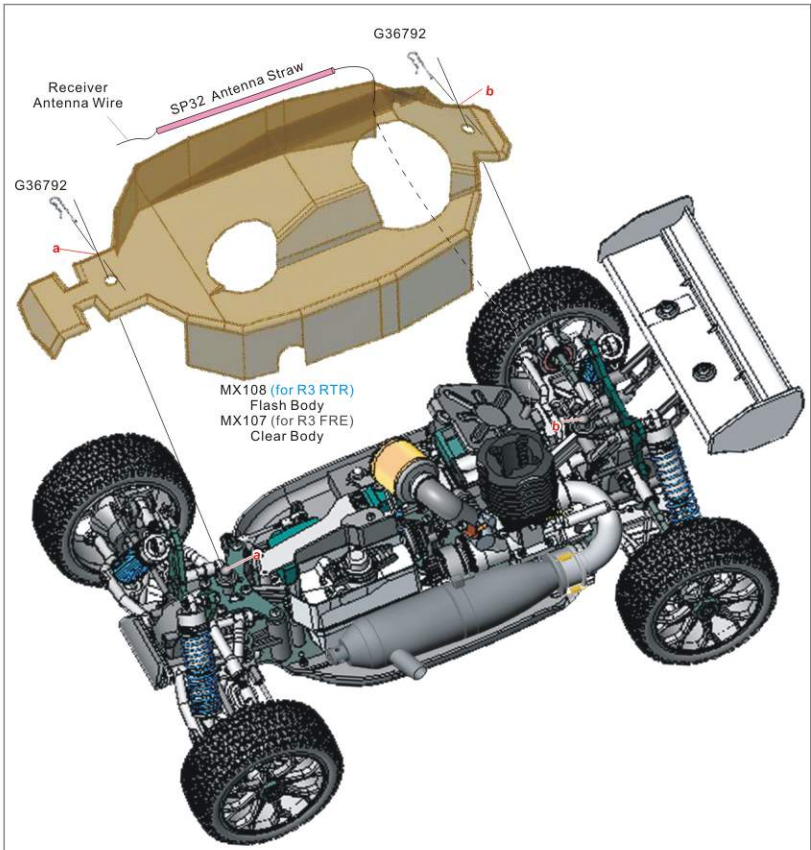


***08-07 Flash Body***

1. After you have painted the body, mount it to the car by drilling out the holes for the body mounts.
2. Cut a hole large enough to clear the engine head and a hole in the windshield to be able to fully open the fuel tank. This hole will also provide additional airflow to your engine.
3. Secure the body with two large body clips.

## G70369 Engine 30 *(for RTR Only)*

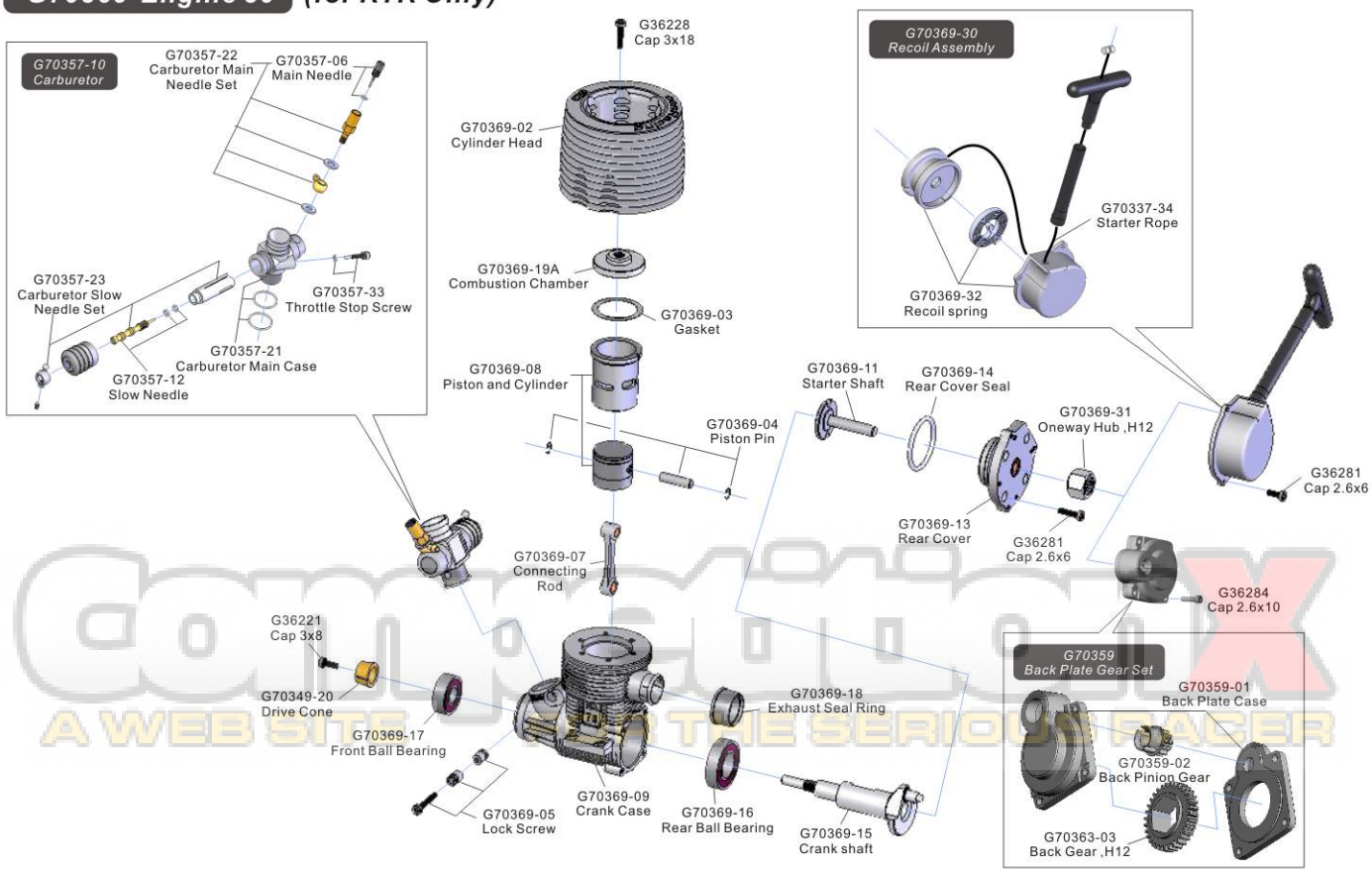


Competition
A WEB SITE FOR THE SERIOUS RACER

# Frame

| Spare Parts | |
|---|---|
| MX007 | Gear Box |
| MX008 | Spindle |
| MX013 | Center Diff. Mount |
| MX015 | Wing |
| MX018 | Main Chassis |
| MX019 | Shock Tower (Front) |
| MX020 | Shock Tower (Rear) |
| MX022 | Controlled Linkage Plastic Set |
| MX023 | Front Aluminum Suspension Plate |
| MX024 | Center Brace |
| MX025 | Upper Plate |
| MX028 | Engine Plate |
| MX029 | Clutch Spring 1mm |
| MX032 | Anti-Roll Plastic Parts |
| MX035 | Ball B6.8 |
| MX038 | Power Switch Cover |
| MX042 | Servo Saver Plastic Parts |
| MX046 | Anti-Roll Bar (Front) |
| MX047 | Anti-Roll Bar (Rear) |
| MX051 | Brake Cam Shaft |
| MX052 | Engin Mount |
| MX053 | Flywheel |
| MX054 | Clutch Shoes |
| Mx059 | Exhaust Mount |
| MX061 | Aluminum Fuel Filter |
| MX074 | Rear Suspension Arm Hinge Pin4x74 |
| MX085 | X-Pattern Tires |
| MX086 | Shock Dust-Proof Boots |
| MX087 | Shock Diaphragm |
| MX088 | Shock Oil Ring Spacer |
| MX089 | Steering Spring |
| MX090 | Body Mount |
| MX091 | Anti-roll Pivot |
| MX098 | Fuel Tank Mount |
| MX107 | Matrix R3 Body (Clear) |
| MX108 | Matrix R3 Flash Body |
| MX202 | Tube Clamp |
| MX203 | Brake Lever |
| MX205 | Bolt |
| MX206 | Threaded Rod M3x40 |
| MX207 | Throttle Spring |
| MX208 | Fuel Filter |
| MX209 | Air Filter Sponge |
| MX210 | Air Filter |
| MX211 | Rubber Coupler |
| MX220 | Shock Rod(Front)55.5mm |
| MX221 | Shock Rod(Rear)67.5mm |
| MX225 | Preload Spacer |
| MX226 | Shock Mount Post |
| MX227 | Brake Outdrivers |
| MX228 | Steel Spur Gear T46 |
| MX229 | Diff Case |
| MX230 | Cross Pins |
| MX231 | Diff Gears |
| MX232 | Outdriber |
| MX233 | Ring Gear |
| MX234 | Body Mount |
| MX236 | Alum. Steering Tube |
| MX237 | Alum. Steering Post |
| MX238 | Rod End(J)B6.8 |
| MX239 | Rod End B6.8 |
| MX240 | Rod End(S)B7.8 |
| MX241 | Rod End(L)B7.8 |
| MX242 | Rod End(J)B7.8 |
| MX243 | Screw Rod M4*44 |
| MX244 | Carriers |
| MX245 | Front Upper Arms |
| MX246 | Uni. Swing Shaft |
| MX247 | Steering Linkage |
| MX248 | Hex Wheel Drivers |

| | |
|---|---|
| MX250 | Front Lower Suspension Arms |
| MX251 | Suspension Arm Support |
| MX252 | Joint Cup |
| MX253 | Arm Shaft |
| MX254 | Propeller |
| MX256 | Flange Bushing (metal) |
| MX257 | Screw Rod,M5*54 |
| MX258 | Dogbone,R2-91.5 |
| MX259 | Wheel Axle |
| MX260 | Rear Hub |
| MX261 | Rear Lower Suspension Arms |
| MX262 | Screw Pin 3*49.5 |
| MX263 | Frame Brace |
| MX264 | Wing Support |
| MX265 | Wing Brace |
| MX266 | Flange Bushing 5x8 (Plastic) |
| MX267 | Radio Tray |
| MX268 | Pilot Nut |
| MX269 | Dirt Giards |
| MX271 | Front Bumper |
| MX272 | Controlled Rods |
| MX274 | Wheel Nuts |
| MX275 | Fiber BrakeDisks |
| MX279 | Shock Alumium Parts,RTR |
| MX280 | Metal Bushing 6x10x3 |
| MX282 | Shock Plastic Parts |
| MX288 | Clutch Bell, T15 |
| MX295 | Ring Gear (T38) and Pinion Gear (T10) |
| MX329 | Center Shaft, 97mm |
| MX336 | Pipe |
| MXS79 | Screw Pin 3x38 |
| MXS86 | Shock Springs-S |
| MXS92 | Wheels |
| GS016 | Ball B7.8 |
| GS017 | Ball B6.8 |
| GS020 | Flange Bushing#4x6 |
| GS024 | Silicon Exhaust Coupler |
| GS078 | Brake Pads |
| GS223 | Rubber Damper |
| GS261 | Adjusting Nut |
| GS272 | Rod Stopper |
| G36115 | Flat Head Screw FH4x4 |
| G36121 | Flat Head Screw FH3*20 |
| G36122 | Flat Head Screw FH3*16 |
| G36151 | Binding Head Screw BH3*12 |
| G36152 | Binding Head Screw 3x8 |
| G36155 | Binding Head Screw BH3x20 |
| G36157 | Binding Head Screw 3x6 |
| G36158 | Binding Head Screw 3x18 |
| G36159 | Binding Head Screw BH3*25 |
| G36172 | Round Head Screw RH4*40 |
| G36181 | Round Head Screw 2x10 |
| G36182 | Round Head Screw 2x8 |
| G36201 | Flange Hex Head Screw 4x10 |
| G36202 | Ball Studs B5.8xM3x14 |
| G36210 | Cap Screw 4X12 |
| G36211 | Cap Screw 4x40 |
| G36212 | Cap Screw 4x10 |
| G36221 | Cap Screw 3x8 |
| G36226 | Cap Screw 3x6 |
| G36227 | Cap Screw 3x10 |
| G36229 | Cap Screw 3x14 |
| G36233 | Screw Cap3x40 |
| G36234 | Screw Cap3x50 |
| G36251 | Set Screw 3x4 |
| G36261 | Set Screw 4x4 |
| G36262 | Set Screw 4x5 |
| G36264 | Set Screw 4x12 |
| G36271 | Set Screw 5x5 |
| G36274 | Screw Rod,M5*25 |
| G36331 | Binding Head Screw BH4*40 |

| | |
|---|---|
| G36332 | Binding Head Screw BH4*10 |
| G36401 | Lock Nut 3 |
| G36402 | 4mm Lock Nut |
| G36501 | Tapping Flange Screw 3x14 |
| G36511 | Tapping Binding Head Screw TpBH3x10 |
| G36515 | Tapping Binding Head Screw Bh3x18 |
| G36541 | Tapping Flat Screw 3x10 |
| G36553 | Tapping Flat Head Screw TpFH4x12 |
| G36561 | Tapping Binding Head Screw BH4*17 |
| G36562 | Tapping Binding Head Screw TpBH4*10 |
| G36714 | Pins 2.5*12 |
| G36724 | Pin 3x12 |
| G36726 | Pin 3x16 |
| G36791 | Hook Pin #6 |
| G36792 | Hook Pin #8(Longer) |
| G36801 | Washer 3x6x0.5 |
| G36802 | Washer 3x8x1 |
| G36810 | Spring Washer |
| G36901 | Shim 5x7 |
| G36902 | Shim 8x11.5 |
| G36903 | Shim 14x11.5 |
| G36905 | Shim 7x11x0.8 |
| G70349-20 | Flywheel Collet |
| G70369-18 | Exhaust Seal Ring |
| G70302 | Oil Ring P3.5 |
| G70306 | Oil Ring P6 |
| G70309 | Oil Ring 10 |
| G73902 | Bearing 5x10x4 |
| G73914 | Bearing 8x16x5 |
| G70429 | Glow Plug #3 |
| GX61 | Fuel Tube |
| FF068 | Zipper Tie (middle) |
| FF072 | Servo Horn |
| SP16 | Ball 5.8 |
| SP23 | Rod End 5.8 |
| SP32 | Antenna Straw |

A WEB SITE FOR THE SERIOUS RACER

# Parts List

| Tunned Parts | |
|---|---|
| MXS03 | Factory Race CF Shock Tower (F) |
| MXS05 | Factory Race CF Shock Tower ® |
| MXS06 | Factory Race CF Center Diff. Brace |
| MXS07 | Factory Race CF Upper Plate |
| MXS08 | Factory Race CF Steering Brace |
| MXS17 | Steel Vented Clutch Bell (13T) |
| MXS18 | Steel Vented Clutch Bell (14T) |
| MXS19 | Steel Vented Clutch Bell (15T) |
| MXS25 | Wheelbase Off-Set 3mm |
| MXS26 | CNC 7075 Factory Race Center Brace |
| MXS27 | CNC 7075 Factory Race Upper Plate |
| MXS34 | Wheelbase Off-Set 2mm,4mm |
| MXS35 | Wheelbase Off-Set 1mm,5mm |
| MXS53 | CNC Chassis |
| MXS54 | CNC Front Shock Tower |
| MXS55 | CNC Steering Linkage |
| MXS56 | CNC Front Lower Arm Brace-Rear |
| MXS57 | CNC Front Upper Plate |
| MXS58 | CNC Rear Wheel Hub |
| MXS59 | CNC Center Diff Frame |
| MXS60 | CNC Center Diff Brace |
| MXS61 | CNC Anti-squat Plate 1degrees |
| MXS62 | CNC Anti-squat Plate 2degrees |
| MXS63 | CNC Anti-squat Plate 3degrees |
| MXS64 | CNC Rear Shock Tower |
| MXS65 | CNC Steering Knuckles |
| MXS66 | CNC Front Upper Arm Brace-Rear |
| MXS67 | CNC Bell Crank Upper |
| MXS68 | CNC Carrier-19degrees |
| MXS69 | CNC Toe-in Plate 2.5degrees |
| MXS70 | CNC Toe-in Plate 3degrees |
| MXS71 | CNC Carrier-22degrees |
| MXS72 | Uni. Driven Shaft |
| MXS73 | Uni. Swing Shaft-Front |
| MXS74 | Uni. Swing Shaft-Rear |
| MXS75 | Diff. Outdrivers |
| MXS76 | Diff. Brake Outdrivers |
| MXS77 | Screw Pin4x71 |
| MXS78 | Screw Pin3x50 |
| MXS79 | Screw Pin3x38.5 |
| MXS80 | Tie Rod 5x56 |
| MXS81 | Tie Rod 5x31 |
| MXS82 | Tie Rod 5x25 |
| MXS83 | Tail Wing Post |
| MXS85 | Front Shocks |
| MXS87 | Shock Springs-M |
| MXS88 | Shock Springs-H |
| MXS89 | Shock Pistons |
| MXS90 | Rear Shocks |
| MXS91 | Steel Brake Disk |
| MXS92 | Wheels (Yellow) |
| MXS93 | Rear Shock Tower |
| MX055 | Clutch Bell T13 |
| MX086 | Shock Dust-proof Boots |
| MX278 | Shock Alumium Parts,FRE |
| G36112 | Screw 4x12 |
| G36908 | W 4x11 |
| G73917 | Ball Bearing 6x10x3 |
| G73919 | Flange Bearing #5 |

# Upgrade Parts

MXS57 CNC Front Upper Plate

MXS17 Steel Vented Clutch Bell (13T)
MXS18 Steel Vented Clutch Bell (14T)
MXS19 Steel Vented Clutch Bell (15T)

MXS68 CNC Carrier-19 degrees
MXS71 CNC Carrier-22 degrees

MXS64 CNC Rear Shock Tower

MXS75 Diff. Outdrivers

MXS85 Front Shocks
MXS90 Rear Shocks

MXS69 CNC Toe-in Plate 2.5degrees
MXS70 CNC Toe-in Plate 3degrees

MXS60 CNC Center Diff Brace

MXS06 CF Factoty Race Center Diff Brace

MXS07 CF Factory Race Upper Plate-F

MXS03 CF Factory Race Shock Tower-F

MXS05 CF Factory Race Shock Tower-R

MXS20 CNC Alum. 3P Clutch Shoes
GSS16 CNC Clutch Shoes (Heavy)

MXS51 CNC Rear Chassis Brace
MXS52 CNC Front Chassis Brace

MXS61 CNC Anti-squat Plate 1 degrees
MXS62 CNC Anti-squat Plate 2 degrees
MXS63 CNC Anti-squat Plate 3 degrees

MXS56 CNC Front Lower Arm Brace-Rear

MXS08 CF Factory Race Steering Brace

MXS58 CNC Rear Wheel Hub

MXS54 CNC Front Shock Tower

MXS59 CNC Center Diff Frame

MXS73 Uni. Swing Shaft-Front
MXS74 Uni. Swing Shaft-Rear
MXS72 Uni. Driven Shaft

MXS67 CNC Bell Crank Upper

MXS76 Diff. Brake Outdrivers

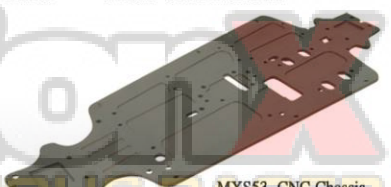

MXS53 CNC Chassis

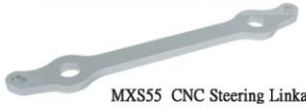

MXS55 CNC Steering Linkage

A WEB SITE FOR THE SERIOUS RACER

# MATRIX R3

R3 RTR:

- 3.5mm shock shafts
- 6061 Aluminum shock towers
- Fully adjustable suspension
- CNC machined shock bodies
- Flexible composite chassis brace
- Composite 3 shoe clutch system
- Durable aluminum precision Chassis
- Completely built and ready to race
- Lightweight hardened steel drive-shafts
- Fully equipped with precision ball bearings

**POWERFUL 5.0 ENGINE**

***Drive-train***
Type: Shaft driven all-time 4WD with center differential
Drive Shafts: Constant Velocity Shafts/ Lighten driveshaft
Differentials: Sealed, super strong 6 gear style, silicon filled with cross pins
Bearings: Full set of precision sealed bearings

***Dimensions:***
Length: 485mm (19.09")
Width: 305mm (12.00")
Weight: 3181g (7lbs)
Wheelbase: 330mm-336mm (12.99"-13.2")

***Suspension***
Mounting Positions Front: Six upper, two lower
Mounting Positions Rear: Six upper, two lower
Shocks: HD 3.5mm shafts

***Chassis***
Type: 3mm thick, 6061 Aluminum
Radio Tray: Low Center of Gravity servo mounts

***Body, Tires & Wheels***
Body: CEN "Intruder", High Impact Lexan
Tires: CEN "X" Cellerator
Wheels: Light Weight 17mm

# MATRIX R3 FRE

R3 FRE:

- CNC upper steering crank
- Precison cut lightweight outdrives
- Precison cut lightweight drive shafts
- CNC toe in and anti squat blocks
- CNC hardened captured hinge pins
- Ultra narrow and efficient wing mount
- Hardened steel adjustable turnbuckles
- Hard anodized CNC machined 7075 Chassis
- CNC Lightweight blue anodized shock towers
- Teflon coated hard anodized big bore racing shocks

WEB SITE FOR THE SERIOUS RACER

CEN