1

1:1 x1

AS3977
Ball Bearing
3/16 x 3/8

1:1 x1

AS9832
Ball Bearing
10 x 16mm

x1

C0009
Gear Box Casing
Right

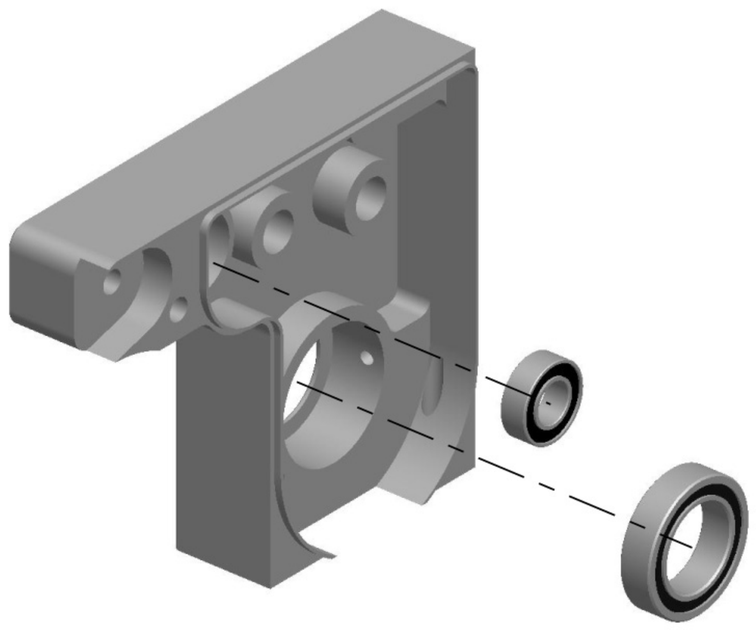

2

1:1 x1

AS3977
Ball Bearing
3/16 x 3/8

1:1 x1

AS9832
Ball Bearing
10 x 16mm

x1

C0009
Gear Box Casing
Left

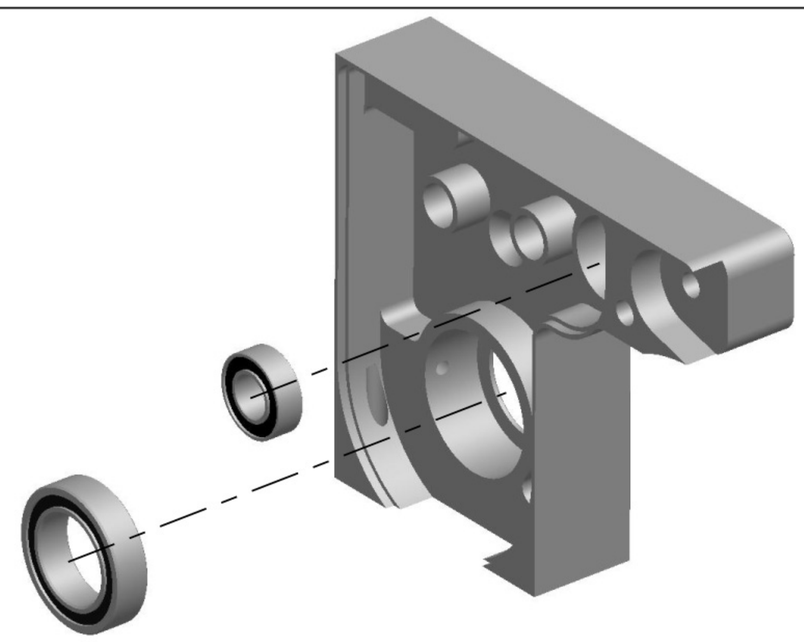

3

1:1 x2

AS6292
4-40 x 3/8 FHCS Screw

1:1 x2

FAST142-4
M3 2.0mm Washer

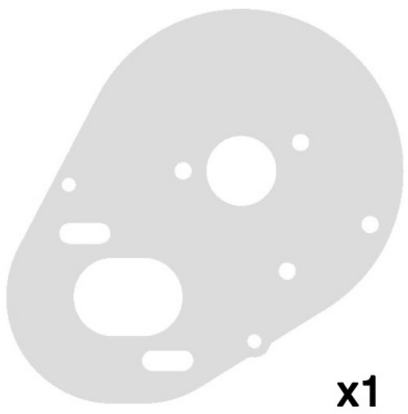

x1

AS1770
Motor Plate

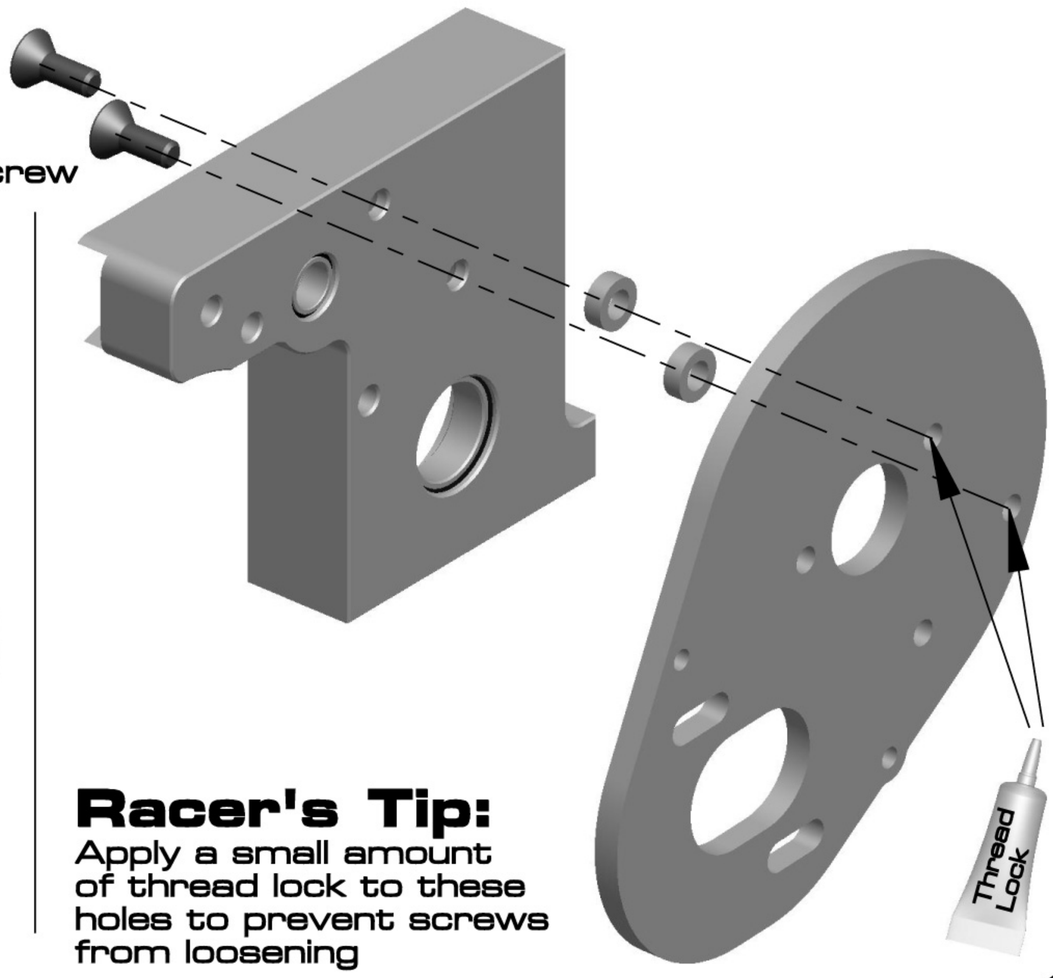

Racer's Tip:
Apply a small amount of thread lock to these holes to prevent screws from loosening

4

x2

1:1 x1

AS9360
Idler Gear

1:1 x1

FTBB01
Ball Bearing
3/16 x 3/8

1:1 x1

AS9361
Idler Gear
Shaft

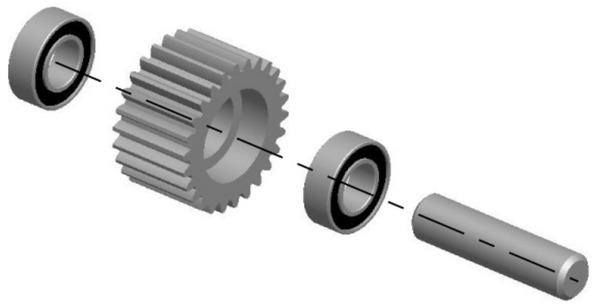

5

x1

AS9601
Top Shaft

1:1 x1

AS9751
Layshaft Spacer

6

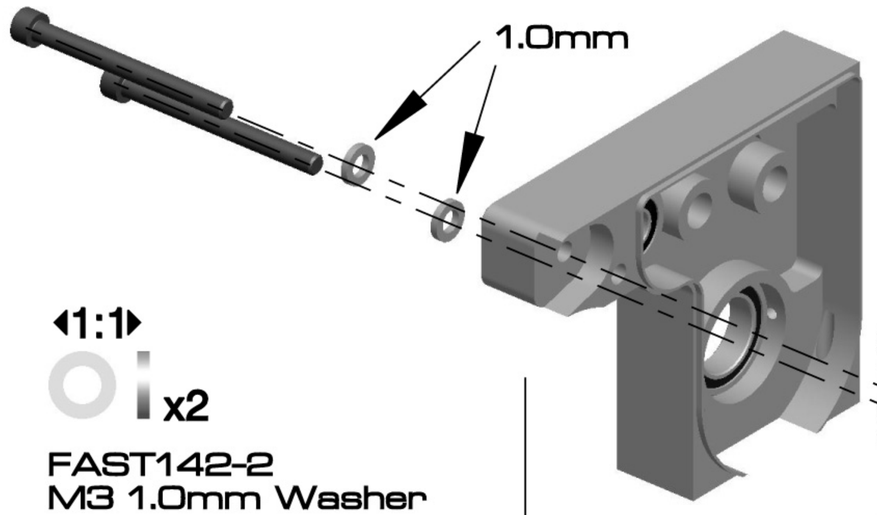

Racer's Tip:
Apply a small amount of thread lock to these holes to prevent screws from loosening

1:1 x2

FAST142-2
M3 1.0mm Washer

1:1 x2

FAST142-4
M3 2.0mm Washer

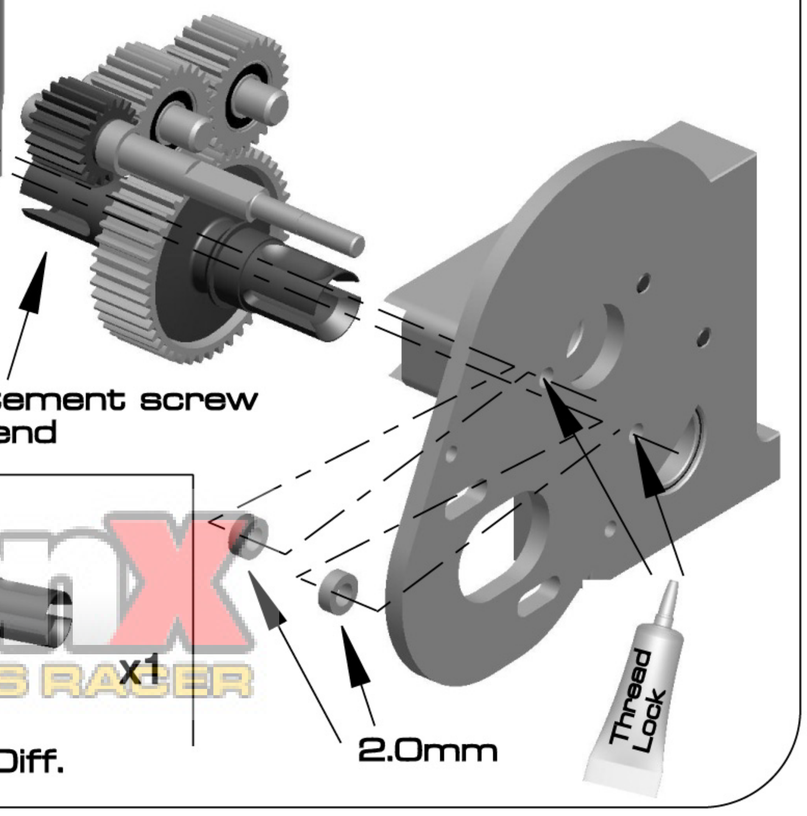

1:1 x2

AS6913
4-40 x 1 1/4 S.H Screw

x1

AS9853
SC10 Ball Diff.

Competition X
A WEB SITE FOR THE SERIOUS RACER

7

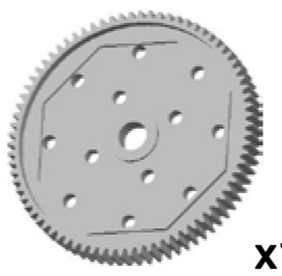

x1

AS9651
Spur Gear, 81T

x2

AS9603
Slipper Pad

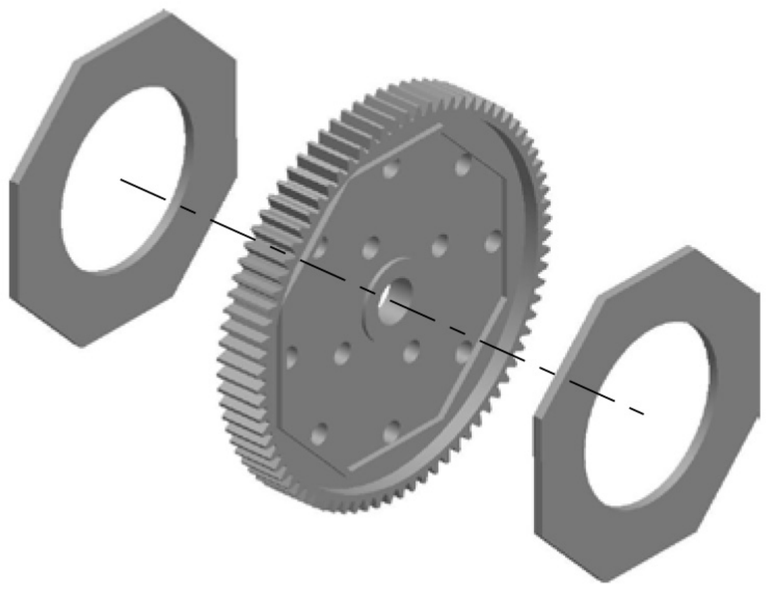

8

x2

AS7485
V2 Slipper Hubs

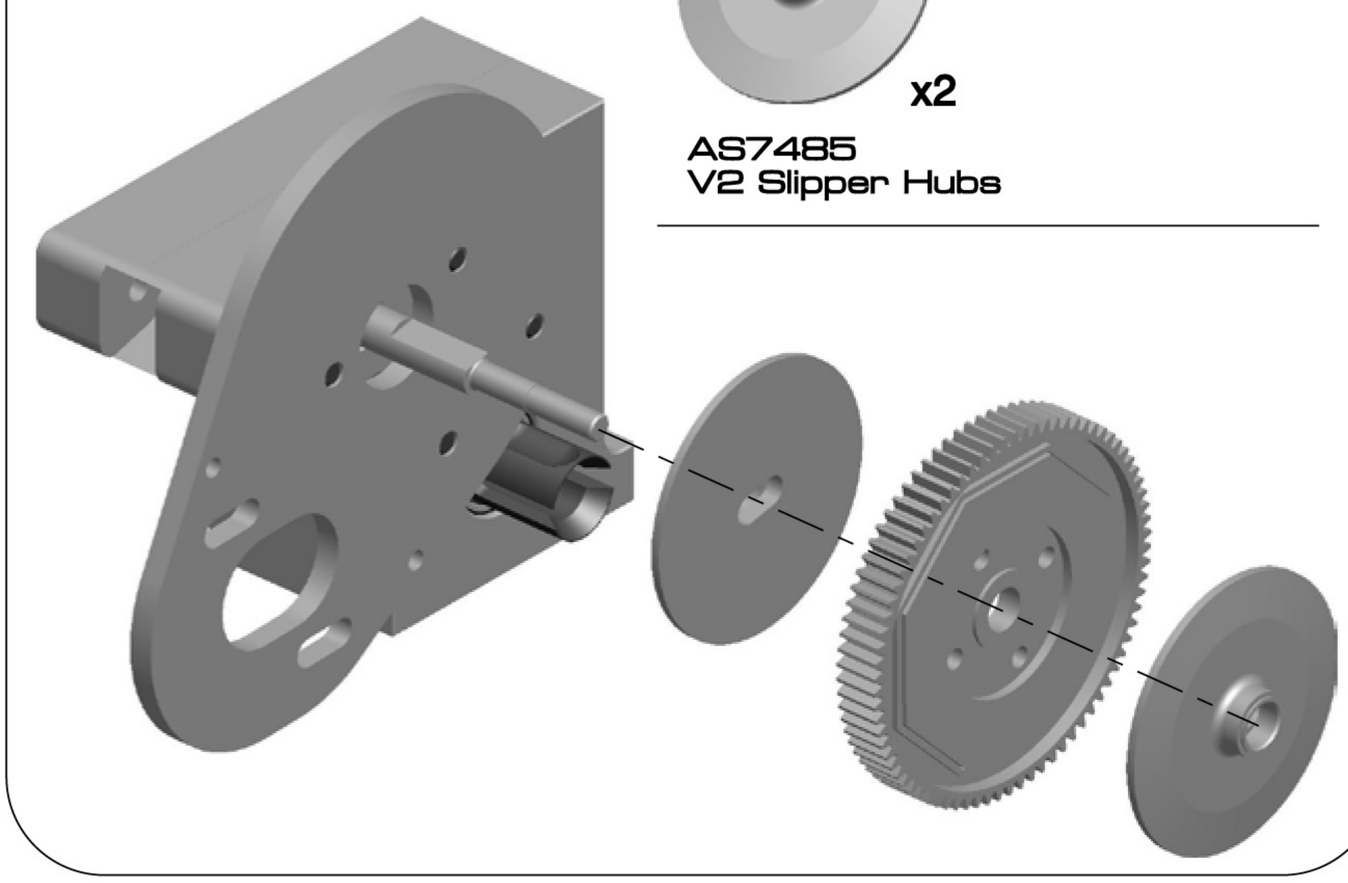

9

1:1

x1

AS7486
V2 Slipper
Spring

1:1

x1

AS7486
V2 Slipper
Washer

1:1

x1

AS6629
5-40 Locknut

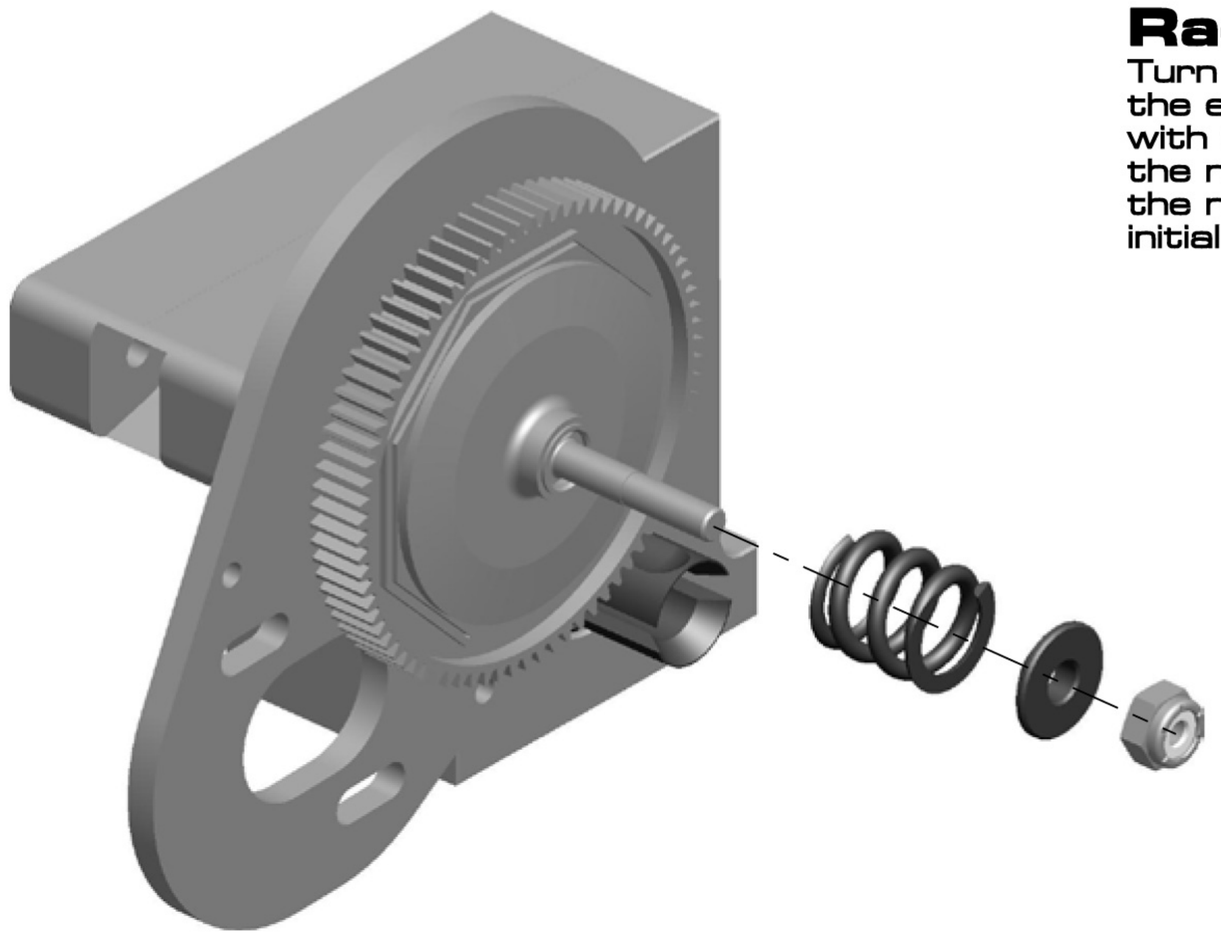

Racer's Tip:

Turn the nut on the shaft so that the end of the top shaft is even with the outside of the nut. Tighten the nut until the shaft extends thru the nut by 3.5mm. Recheck after initial run.

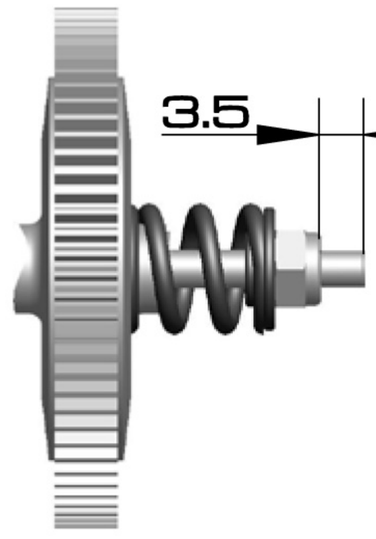

10

1:1

x1

AS89072
Turnbuckle

1:1

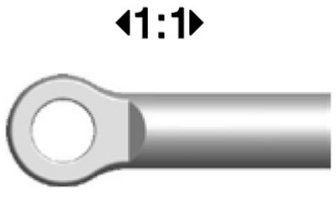

x2

AS25568
Ball Joint

1:1

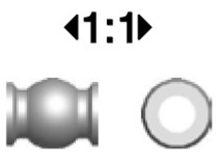

x2

AS25568
Ball

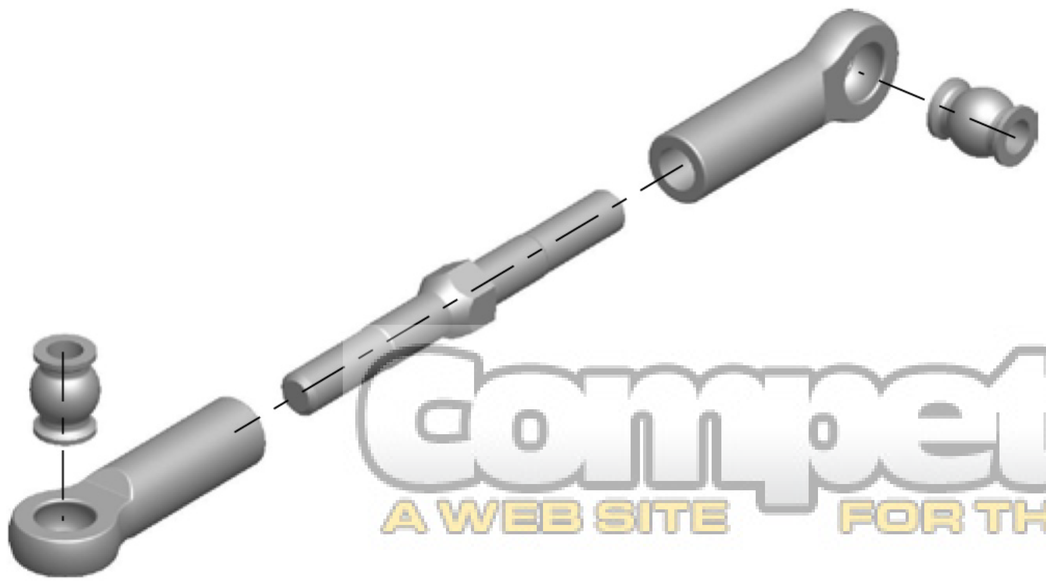

1:1

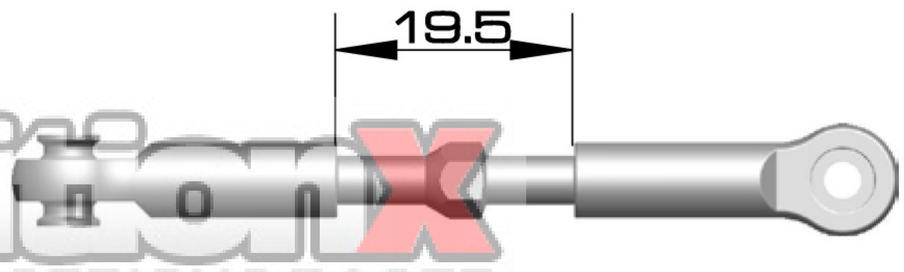

CompetitionX
A WEB SITE FOR THE SERIOUS RACER

11

1:1

x1

FAST116F
M3 x 14 FHCS
Screw

1:1

x1

FASTM3
M3 Locknut

x1

C0007
Battery X Brace

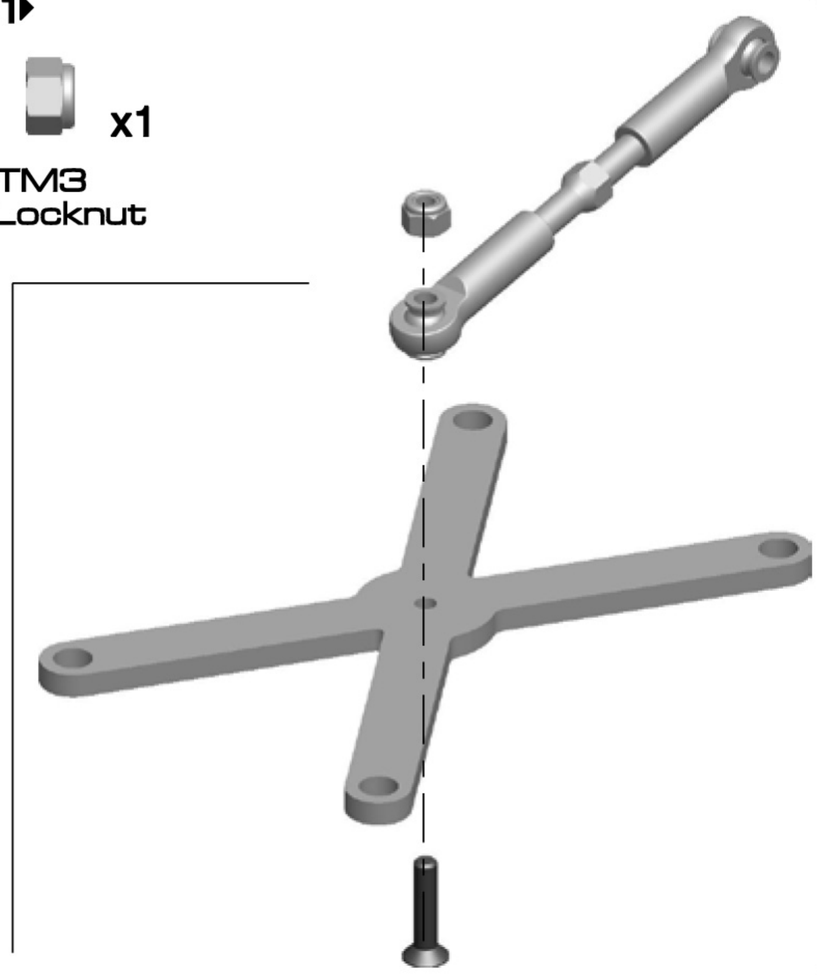

12

1:1

x1

AS6928
4-40 x 1 S.H Screw

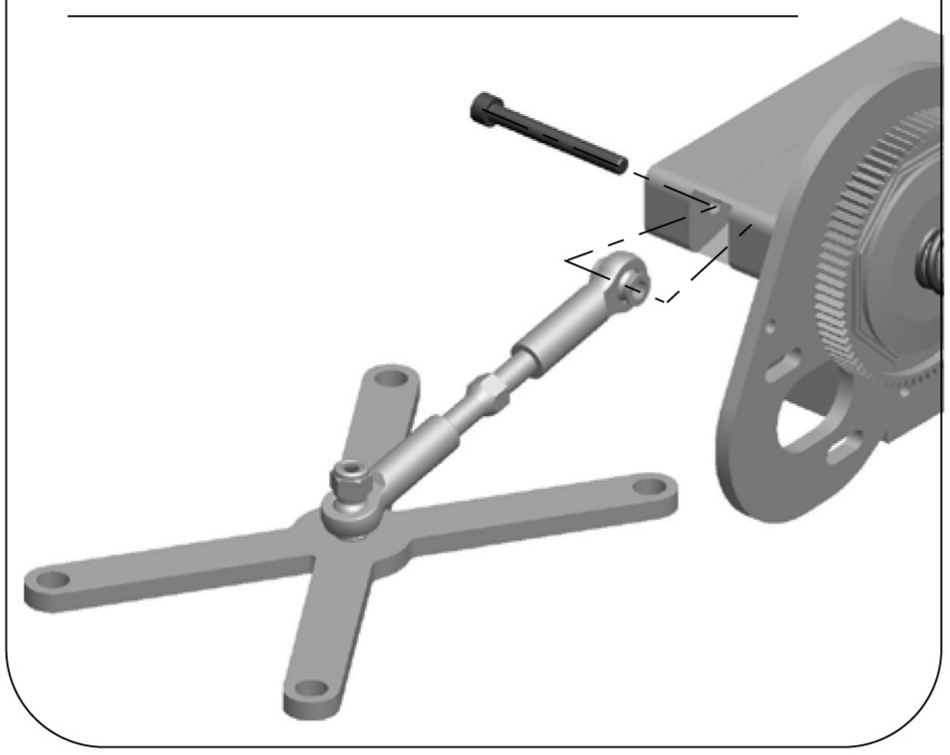

13

1:1

x2

AS6278
Ballstud 4-40 x 0.40"

1:1

x2

FAST142-4
M3 2.0mm Washer

1:1

x2

AS4449
4-40 Mini Locknut

1:1

x2

AS7413
4-40 x 3/4 BHCS Screw

1:1

x2

AS7413
Shock Bushing

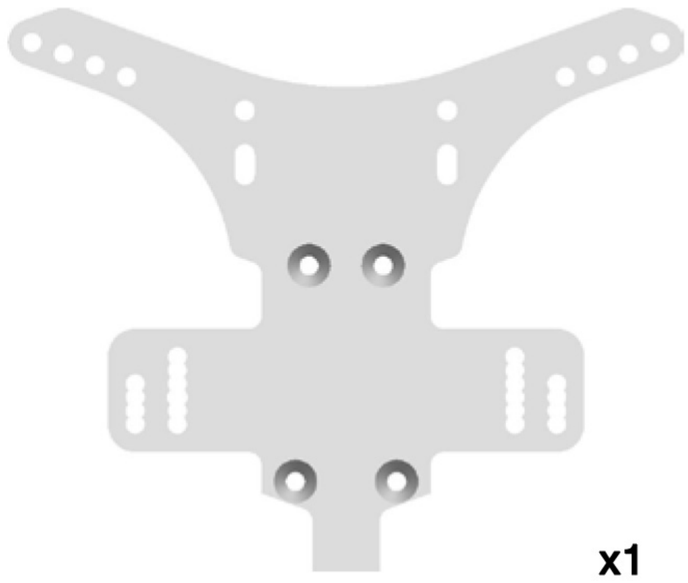

x1

C0014
Rear Carbon Fiber
Shock Tower

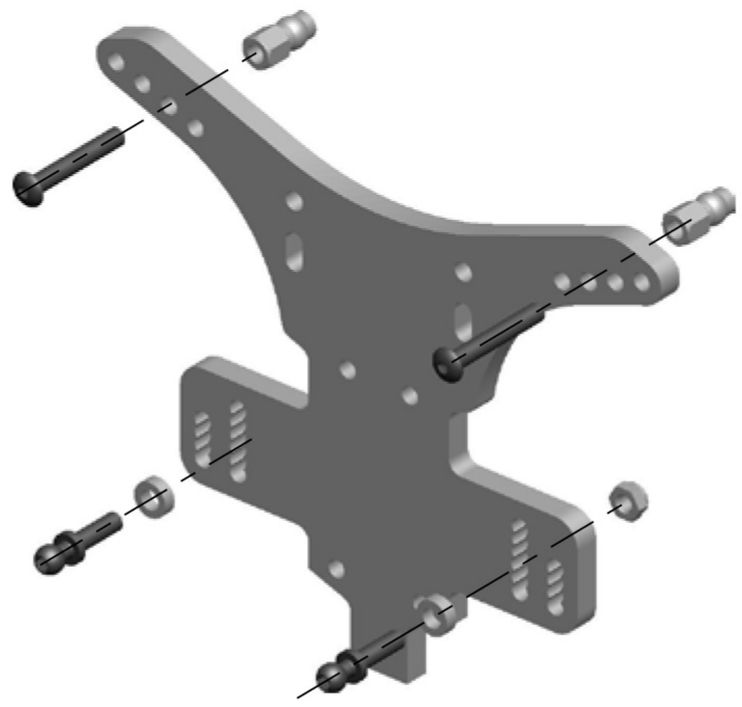

14

1:1

x2

C0015
M3 x 10 FHCS
Screw

1:1

x2

C0015
M3 x 8 FHCS
Screw

1:1

x2

FAST142-4
M3 2.0mm Washer

x2

C0015
Wing Washer

x2

C0015
Wing Mount

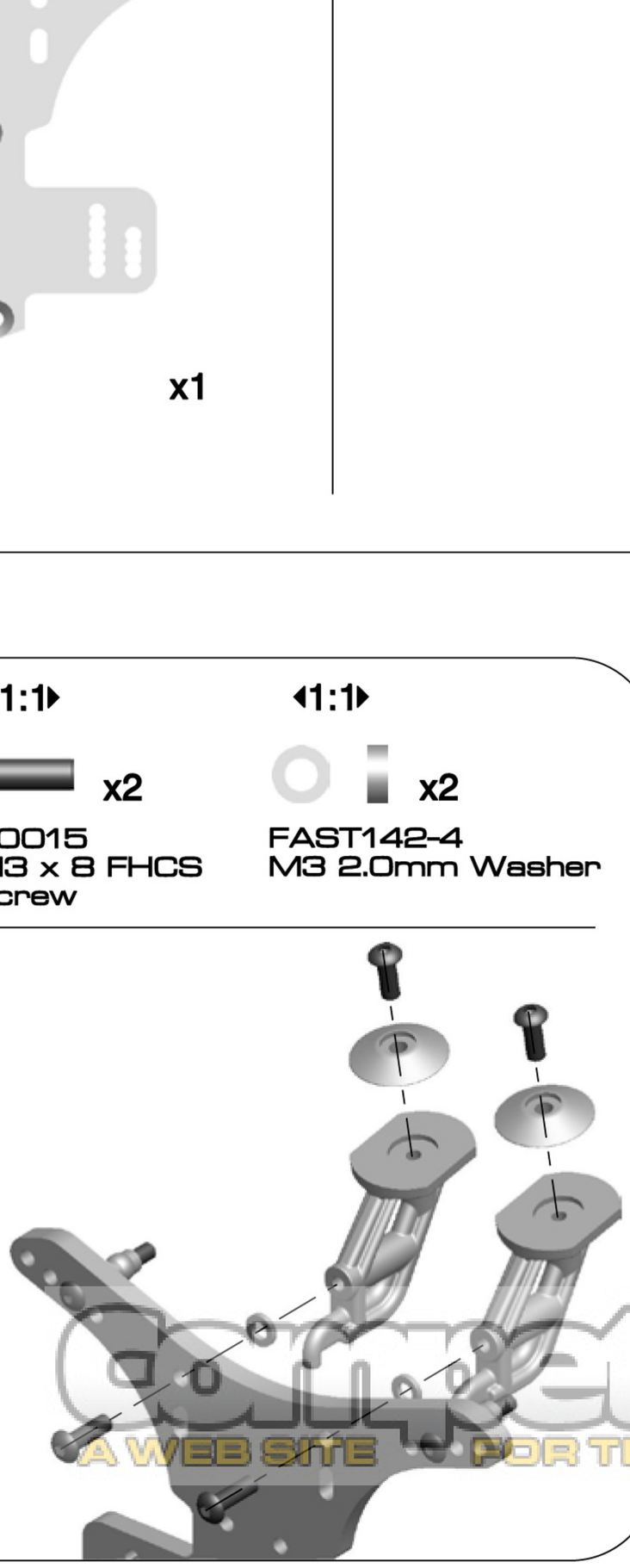

15

1:1

x4

AS6292
4-40 x 3/8
FHCS Screw

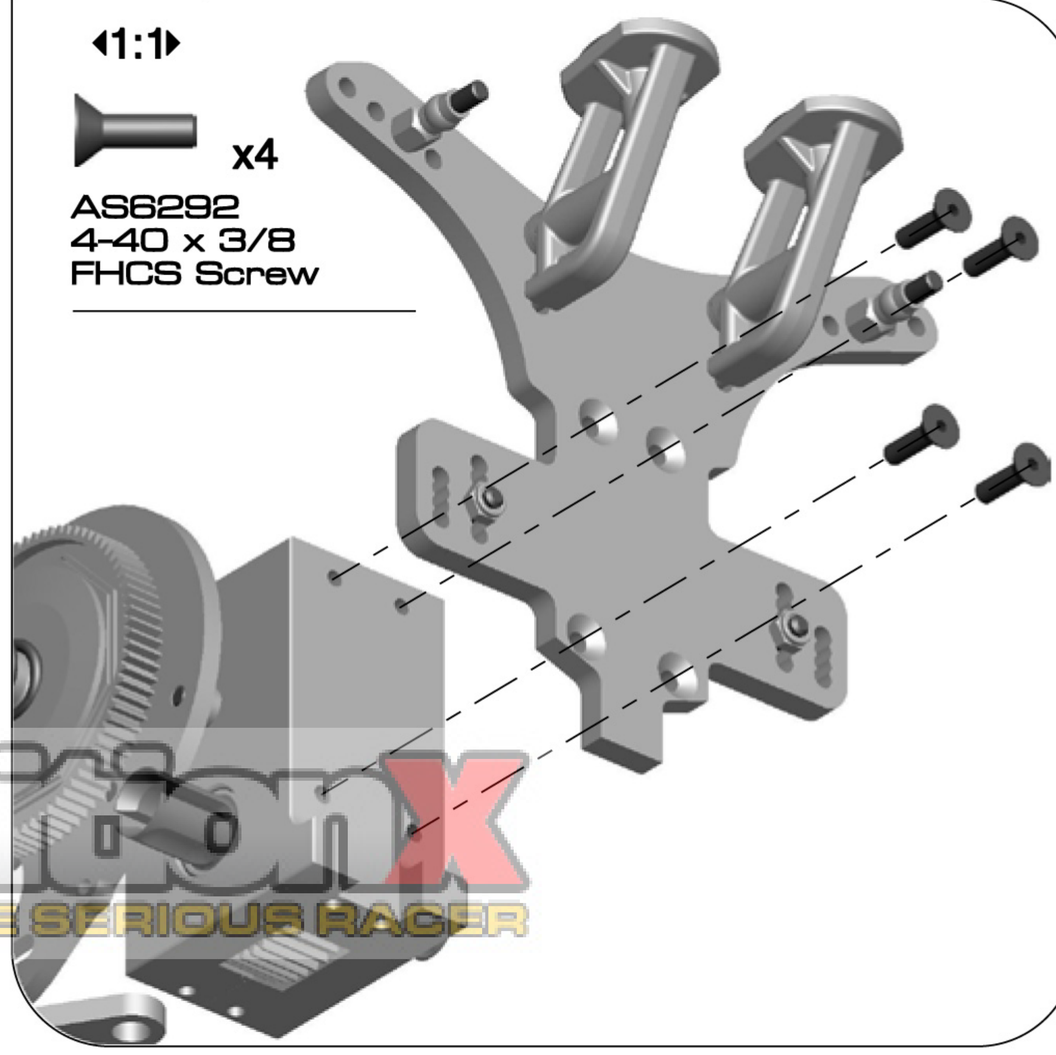

CompetitionX
A WEB SITE FOR THE SERIOUS RACER

16

1:1

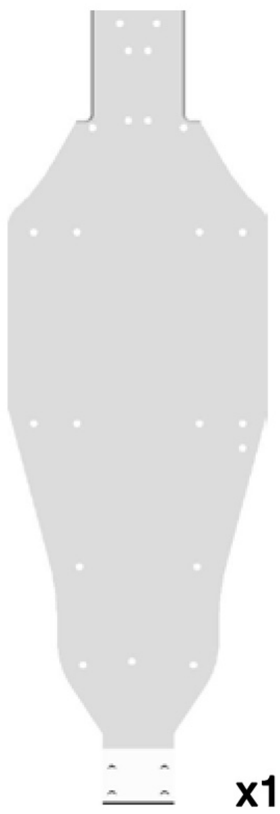

x1

C0006
Chassis

x5

AS6292
4-40 x 3/8 FHCS
Screw

x3

C0010
Front Brace
Posts

x1

C0011
Front Suspension
Brace

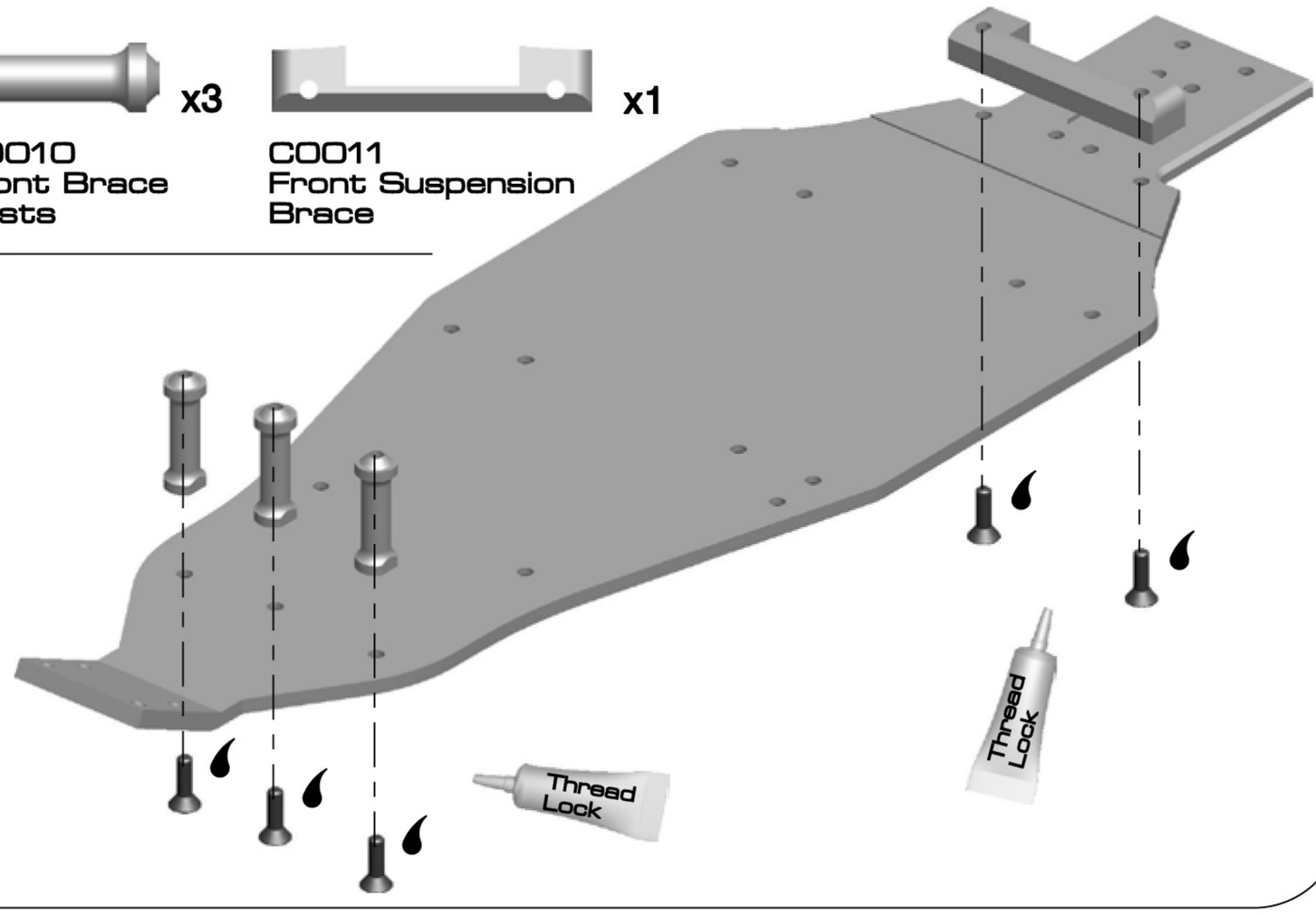

17

1:1

x8

AS6292
4-40 x 3/8 FHCS
Screw

1:1

x4

AS4449
4-40 Mini Locknut
Brace

x2

C0008
Lipo Holder

1:1

x4

AS9706
Lipo Posts

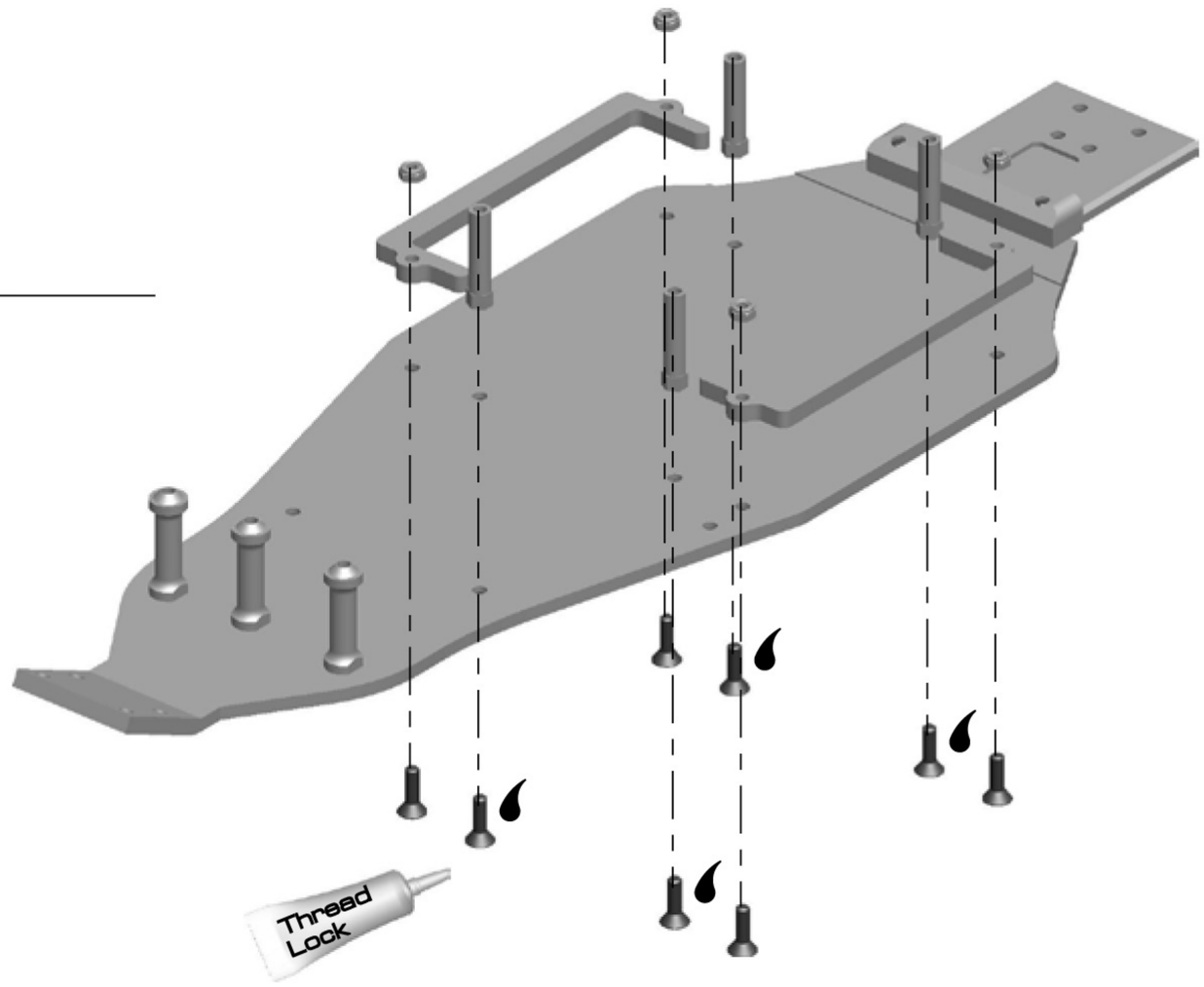

18

x4

AS6292
4-40 x 3/8 FHCS
Screw

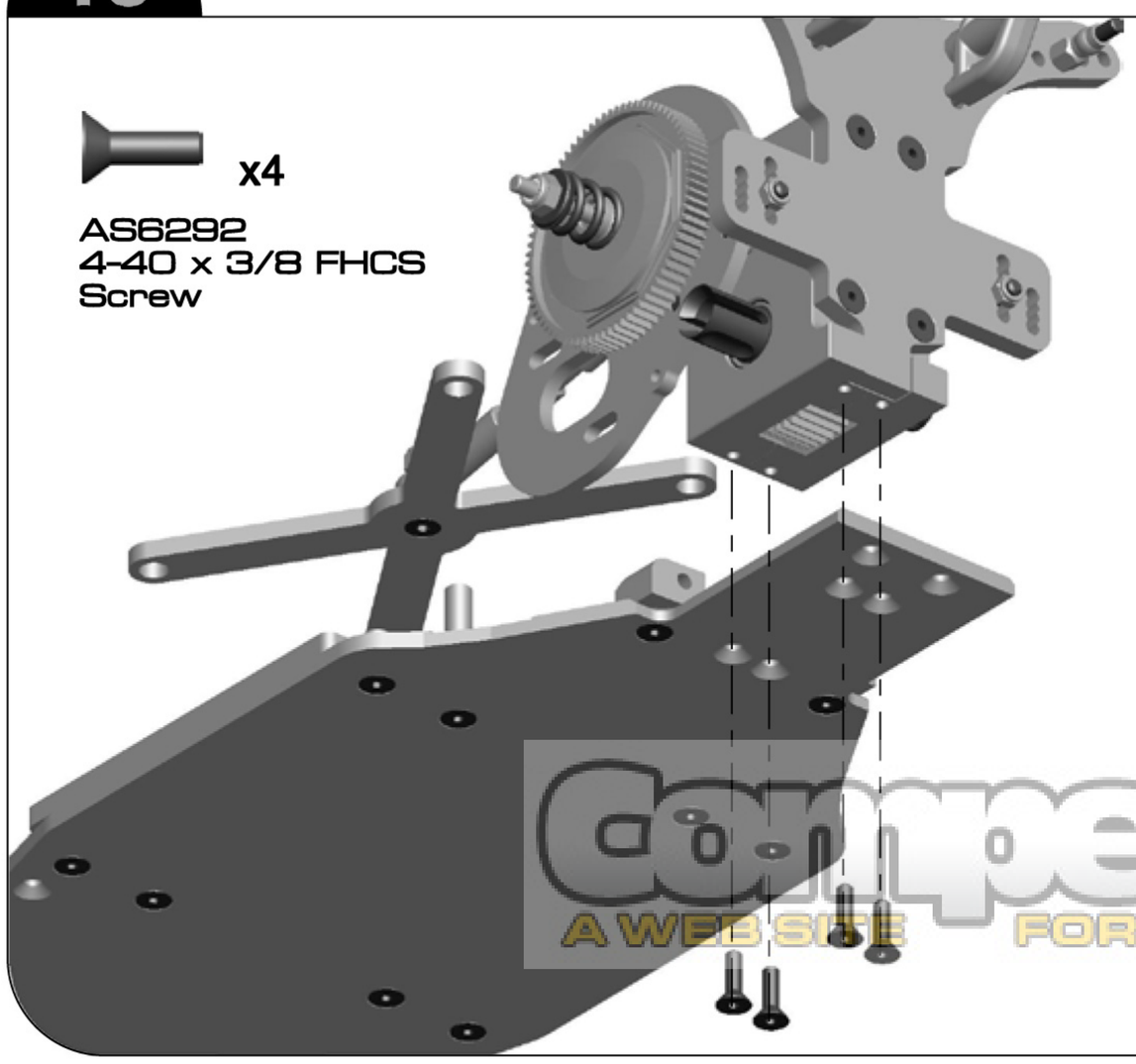

19

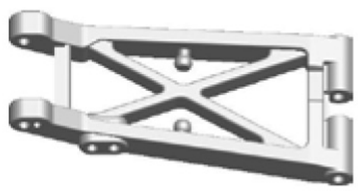

x1

AS9582
Rear A-Arm, Right

x1

AS9582
Rear A-Arm, Left

1:1

x2

C0013
Hinge Pins

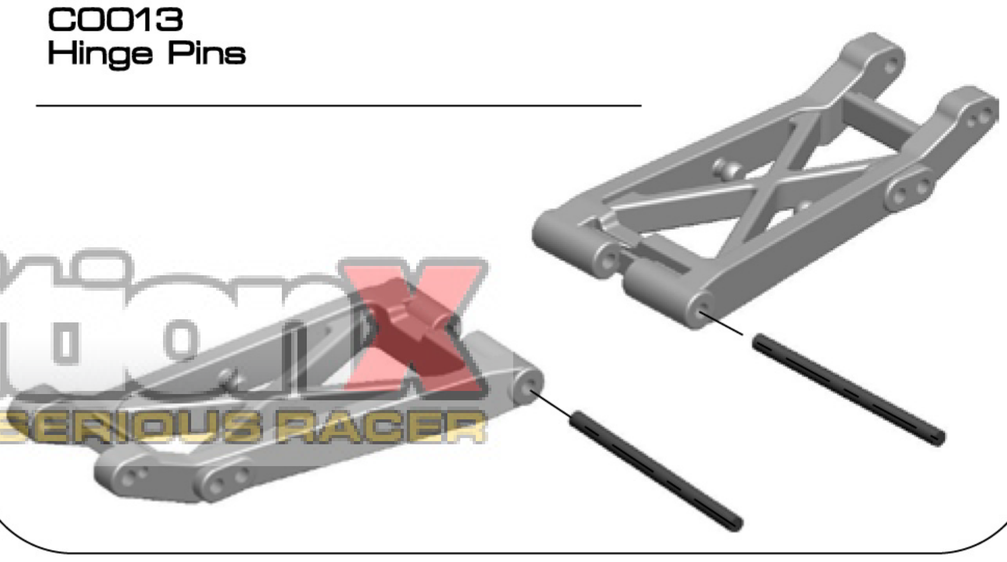

Competition X
A WEB SITE FOR THE SERIOUS RACER

20

x1

C0012
Rear Suspension
Brace

1:1

x2

AS6292
4-40 x 3/8 FHCS
Screw

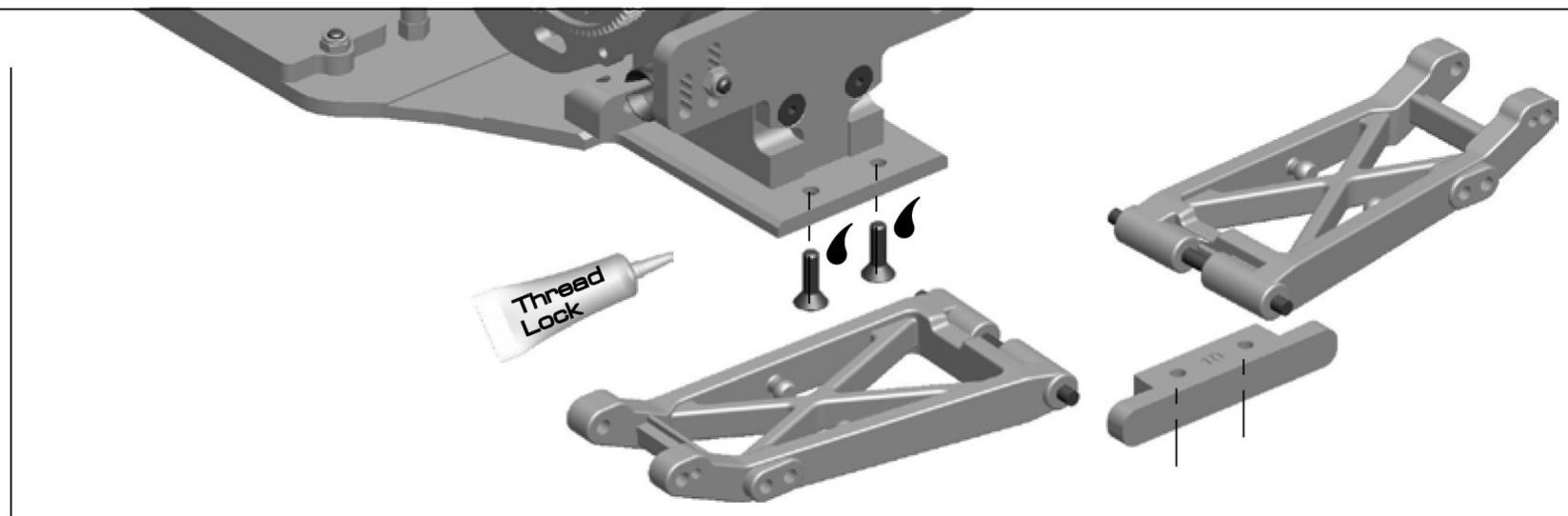

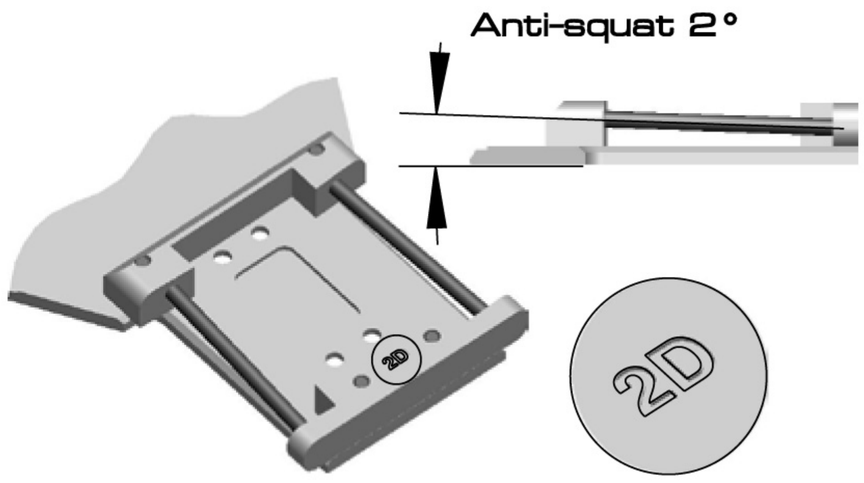

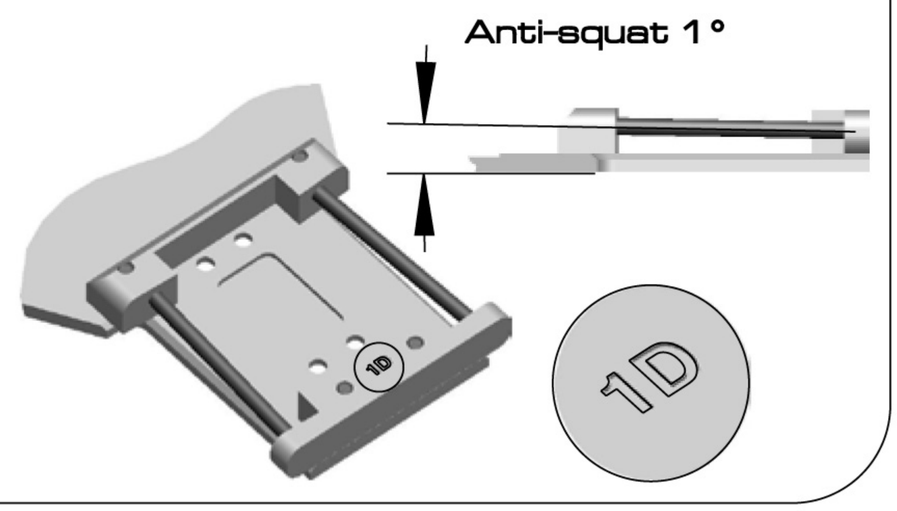

21

1:1

x4

AS6915
4-40 x 5/8 FHCS
Screw

1:1

x4

FAST140
M3 Countersunk
Washer, Blue

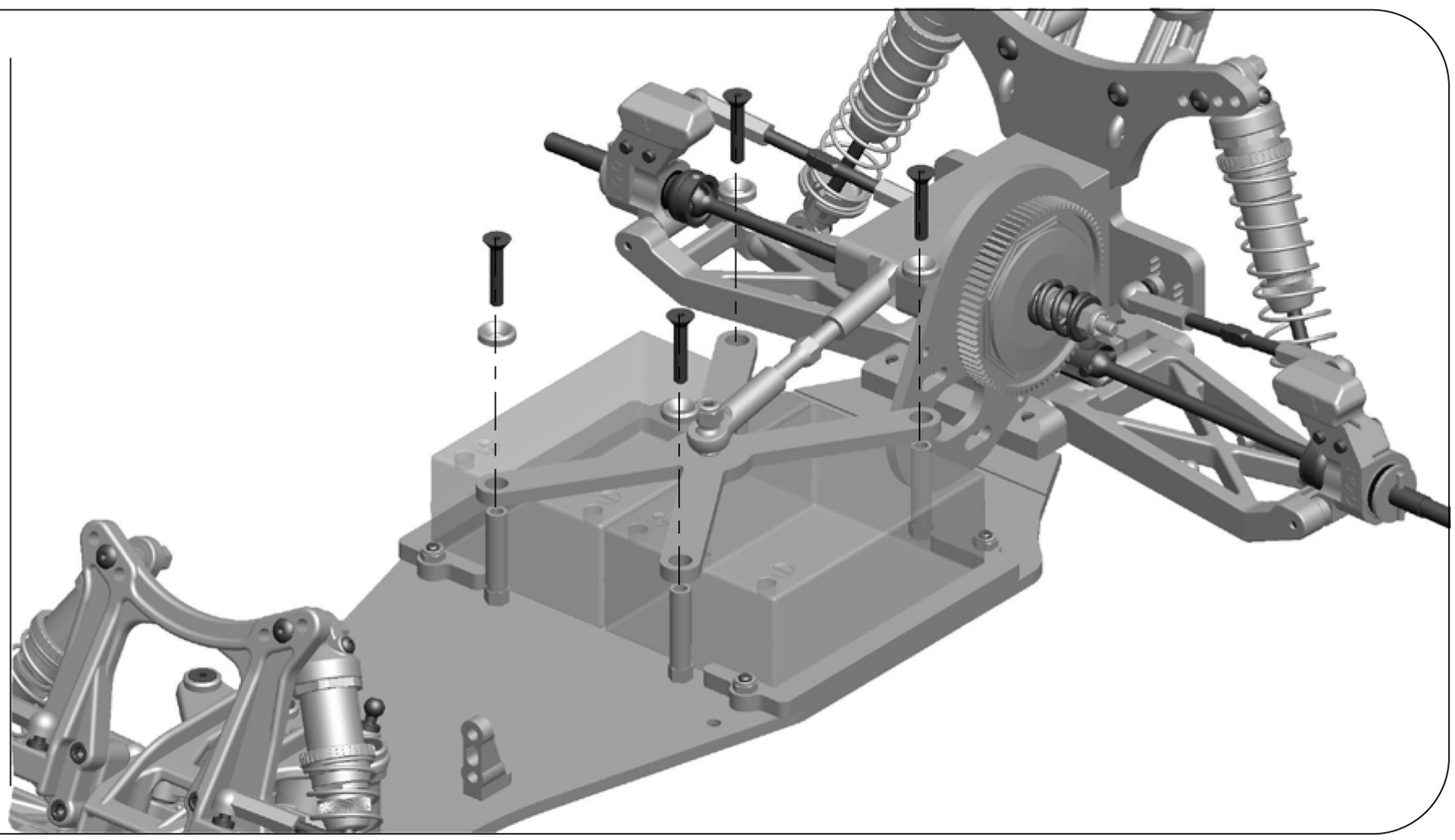

CompetitionX
A WEB SITE FOR THE SERIOUS RACER

Setup Sheet for Centro C4.1 mid-motor conversion kit

CENTRO C4.1

DRIVER: _____

TRACK: _____

SURFACE: _____

DATE: _____

Front End

toe: _____

camber: _____

ride height: _____mm

washers: _____

axle height

- up ☐
- middle ☐
- down ☐

caster

- 20 ☐
- 25 ☐
- 30 ☐

Rear End

rear hub carrier

- std ☐
- 0.5 ☐
- 1 ☐

toe: _____

camber: _____

ride height: _____mm

anti-squat: _____deg

wheel base

- long ☐
- medium ☐
- short ☐

Front Shocks

spring _____ piston_____

shock oil_____ limiter_____

Rear Shocks

spring _____ piston_____

shock oil_____ limiter_____

Front Tires

tire: _____ compound: _____

insert: _____ wheel: _____

Rear Tires

tire: _____ compound: _____

insert: _____ wheel: _____

Electronics

motor & wind: _____

pinion: _____ spur gear: _____

batteries: _____ placement: _____

radio: _____servo/ expo: _____/_____

throttle/ brake epa: _____/_____

throttle/ brake expo: _____/_____

esc: _____ throttle profile: _____

initial brake _____ drag brake: _____

Body/Wing

body/ wing: _____

notes: _____

Differential

gear differential/ oil: _____/_____

ball differential/ setting: _____/_____

Race/ Car/ Notes

qualify: _____ main: _____ finish: _____

_____

_____

_____

_____

_____

Weight distribution

bulkhead

- std ☐
- brass ☐
- alloy ☐

option weights

- ackerman ☐
- under bellcrank ☐

lipo holders ☐

rear arm mount ☐

bulkhead weights

- 5g ☐
- 10g ☐
- 15g ☐

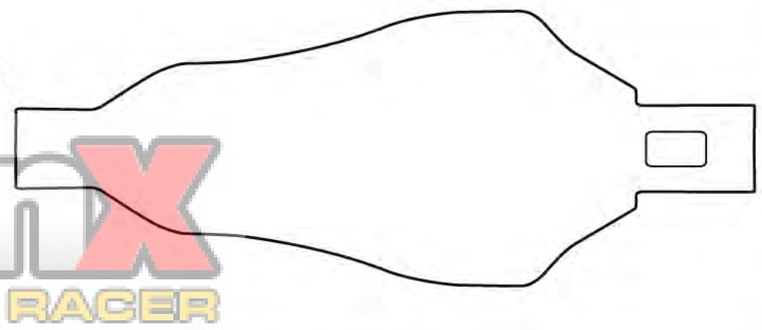

CompetitionX
A WEB SITE FOR THE SERIOUS RACER

For more set-up info, visit www.cmldistribution.co.uk