1/10 SCALE
ON ROAD CAR

EDAM
Lead the Way

Spirit

1/10 SCALE ON ROAD CAR

INSTRUCTION MANUAL

Warming!

This kit is not a toy! Periodic maintenance is required to keep it in top running condition. All the moving hot parts, such as the engine head, exhaust system should not be touched during operation. Precaution is needed to handle the car parts during and after a run. Do not turn off the radio until the car engine is turned off. Safe operation will always ensure a fun time with your car!

FORWORD

Drivers are prompted to read this instruction carefully before assembling. With racer in mind, this car is designed to meet the most critical players in the category. Many details have been attended for the convenience of adjustment and tuning by the track site. Even conservative drivers will find this car to be exactly what they would want from a 1/10 GP On Road Car. With all the attention placed on the car during the designing stage, driver's cautiousness while handling and maintaining of the car is still mandatory to keep it working continually in the best status.

Unless otherwise noted, this kit will come with everything but Motor, Tires, muffler, manifold, fuel, body, Radio, Servos and Receiver Battery. (Detail of additional tools and or items needed for completion is outlined in the following page).

INDEX

A Forword P1

B Caution P2

C Assembly Instruction P3-P24

Parts Bag 01 — P3
Parts Bag 02 — P4
Parts Bag 03 — P4
Parts Bag 04 — P4
Parts Bag 05 — P5
Parts Bag 06 — P5
Parts Bag 07 — P7
Parts Bag 08 — P7
Parts Bag 09 — P9
Parts Bag 10 — P10
Parts Bag 11 — P11
Parts Bag 12 — P12
Parts Bag 13 — P12
Parts Bag 14 — P13
Parts Bag 15 — P15
Parts Bag 16 — P16
Parts Bag 17 — P17
Parts Bag 18 — P17
Parts Bag 19 — P19
Parts Bag 20 — P21
Parts Bag 21 — P22

D Fuel Pipe Assembly P25

E Painting Body P26

F Parts Bag Detail P27-P32

G Setup Sheet P33-P34

H Parts List P35-P38

A WEB SITE FOR THE SERIOUS RACER

CAUTION

Unless otherwise Noted, the following items are not included with Pro Kit. Please order separatly if necessary to setup your car in operational mode.

Additional Items Needed For Completion

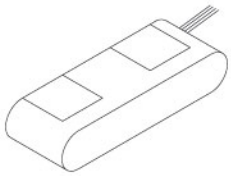

Battery For Receiver

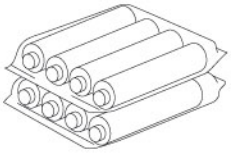

Battey For Transimitter

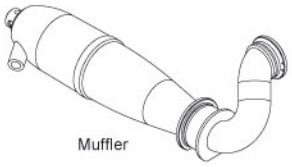

Muffler

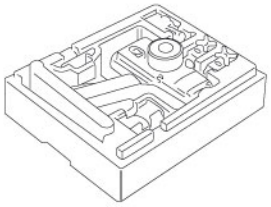

2 Channel Radio

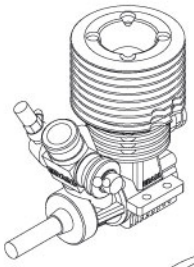

Engine

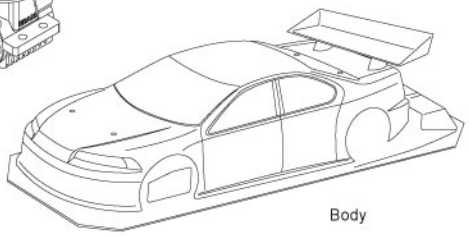

Body

Tools needed To Assemble

Box Wrench(5.5mm / 7mm / 10mm)

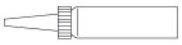

Instant Glue

Phillips Type Screw Driver

Screw (Sement)

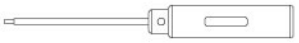

Hex Wrenches

Rubber Glue

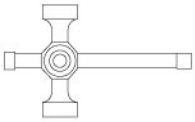

Utility Wrench

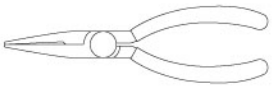

Needle Nose Pliers

Hobby Knife

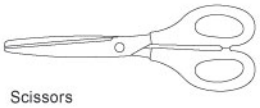

Scissors

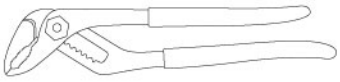

Pliers

Glass or Vinyl Tape

Additional Items Needed For Starting Engine

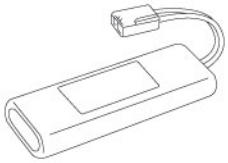

Battery For Starter Box

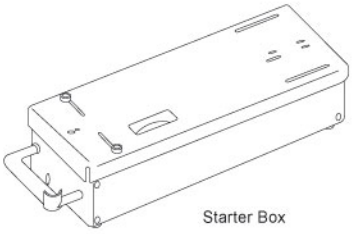

Starter Box

Glow Plug Ignitor

Air Filter Oil

Fuel

Fuel Pump

Items Needed To Control Car

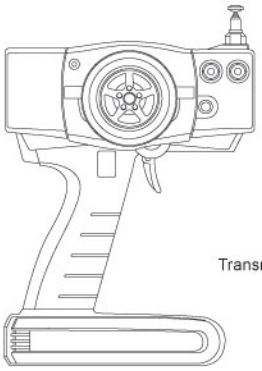

Transmitter

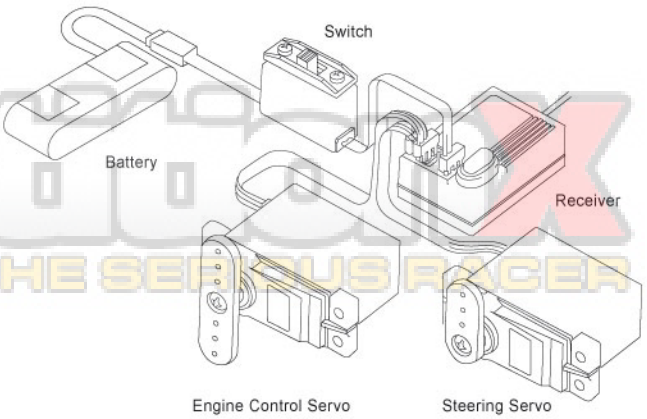

A WEB SITE FOR THE SERIOUS RACER

Parts Bag 01

1 《Front Gear Differential Axle》

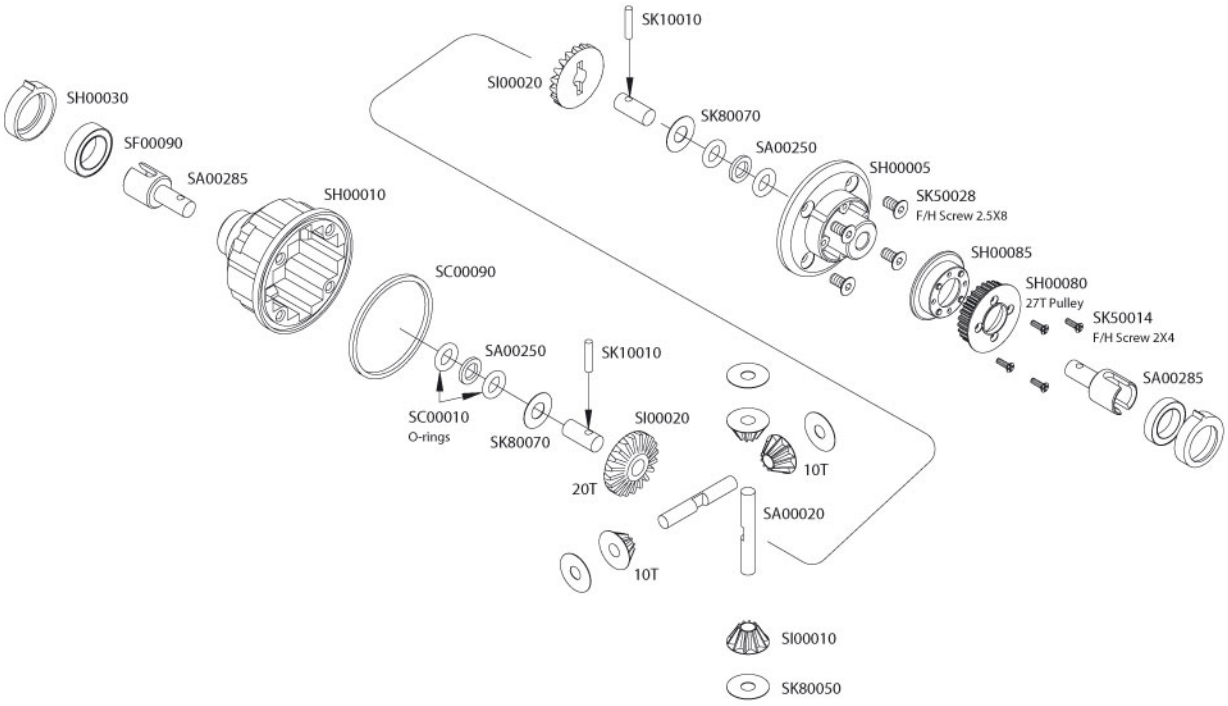

2 《Front One-Way & Solid Axle》

Option Parts, Not Included in Touring Kit

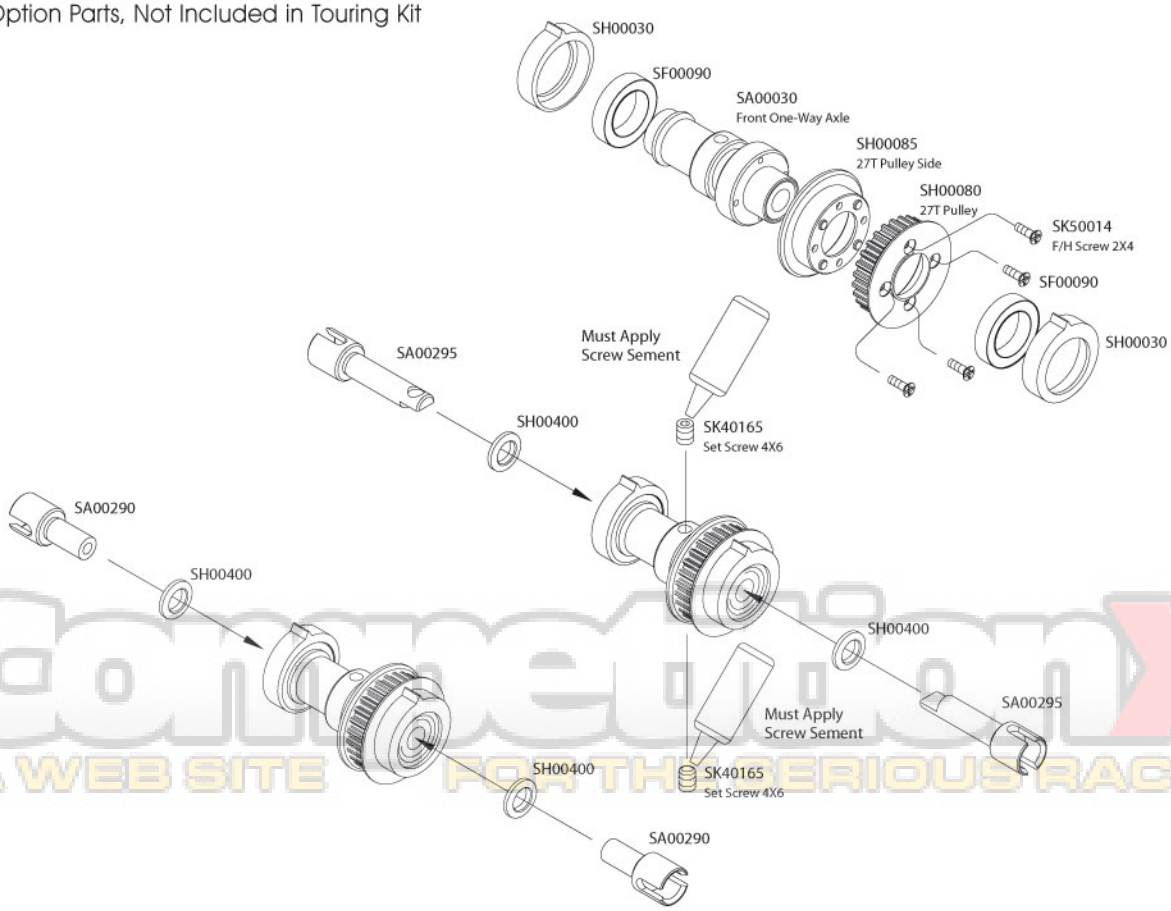

CompetitionX
A WEB SITE FOR THE SERIOUS RACER

Parts Bag 02

3 《Rear Gear Differential》

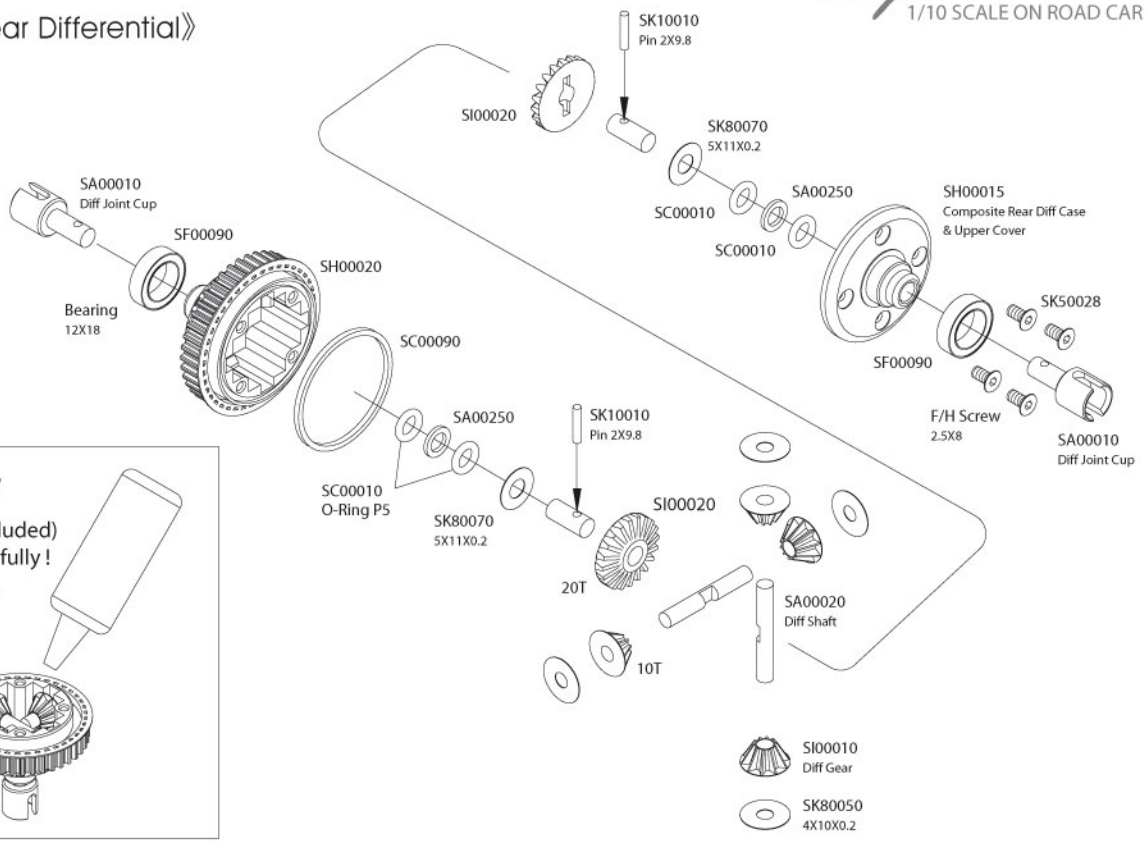

Front Pulley

Diff. oil (Not Included)
Fill Diff. Oil Carefully !
Do Not Overfill.

Parts Bag 03

4 《Servo Saver》

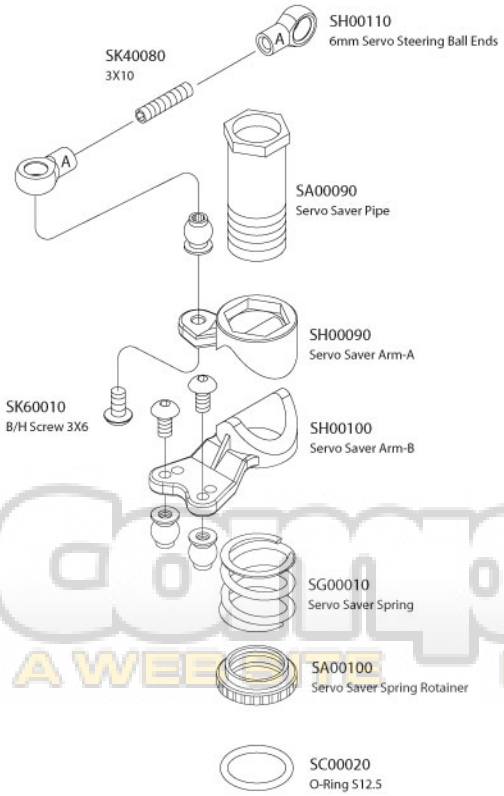

5 《Tie Rod》

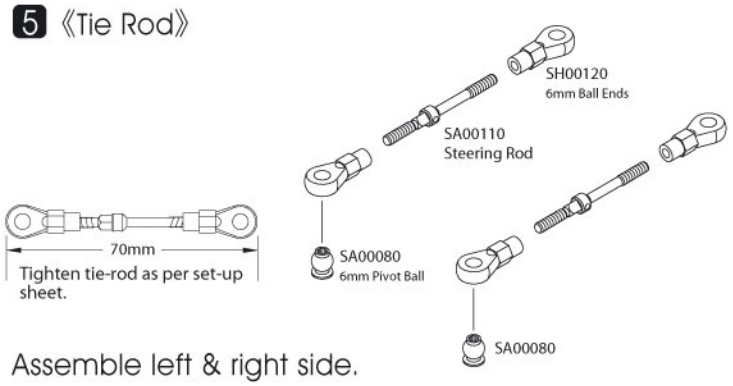

Assemble left & right side.

Parts Bag 04

6 《Pulley Hub》

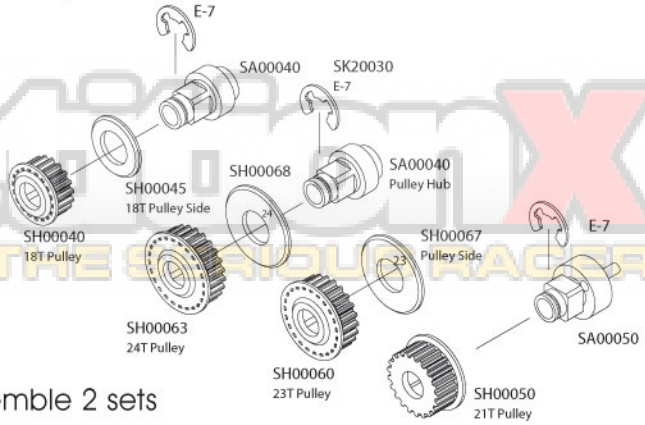

Assemble 2 sets

Competition X
A WEBSITE FOR THE SERIOUS RACER

Parts Bag 05

7 《Front Suspension Arm》

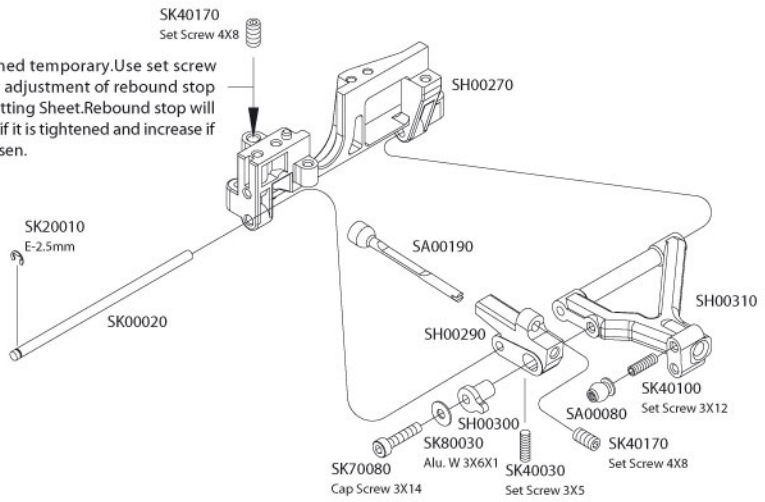

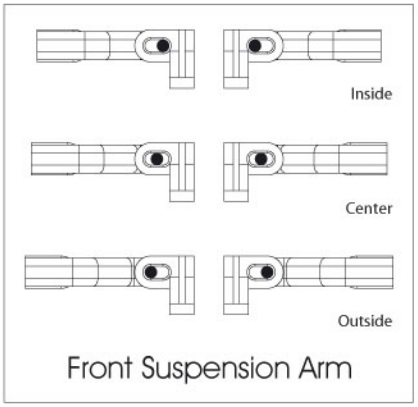

8 《Front Suspension Arm》

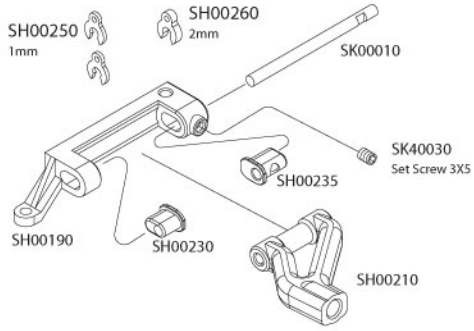

Note:
Please be noted, if you are setting the front suspension arm in outside position, please use 3x5 set screw (SK40030).
If you are setting the front suspension arm in center position, please use 3x6 set screw (SK40040).
If you are setting the front suspension arm in inside position, please use 3x8 set screw (SK40060).

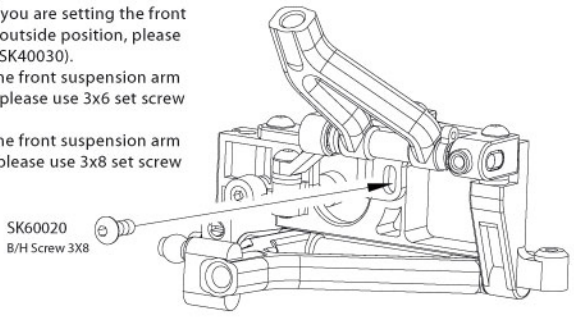

9 《Front Suspension Arm》

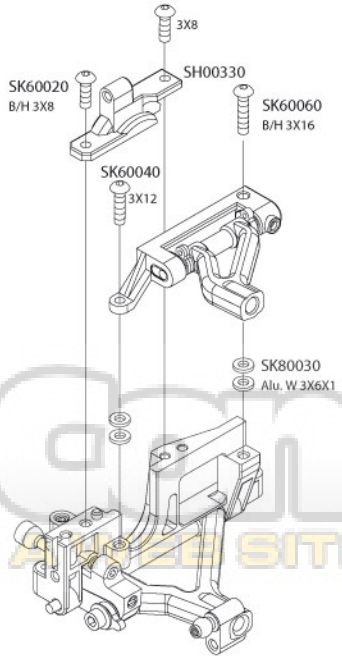

Parts Bag 06

10 《Middel Shaft Bracket》

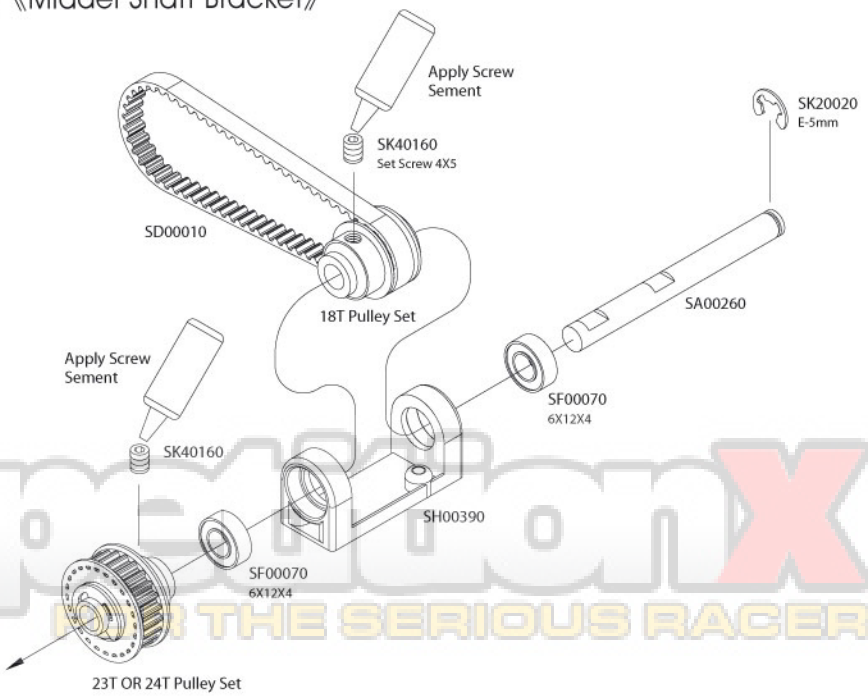

CompetitionX
ATHLETE SITE FOR THE SERIOUS RACER

Spirit
1/10 SCALE ON ROAD CAR

11 《Steering》

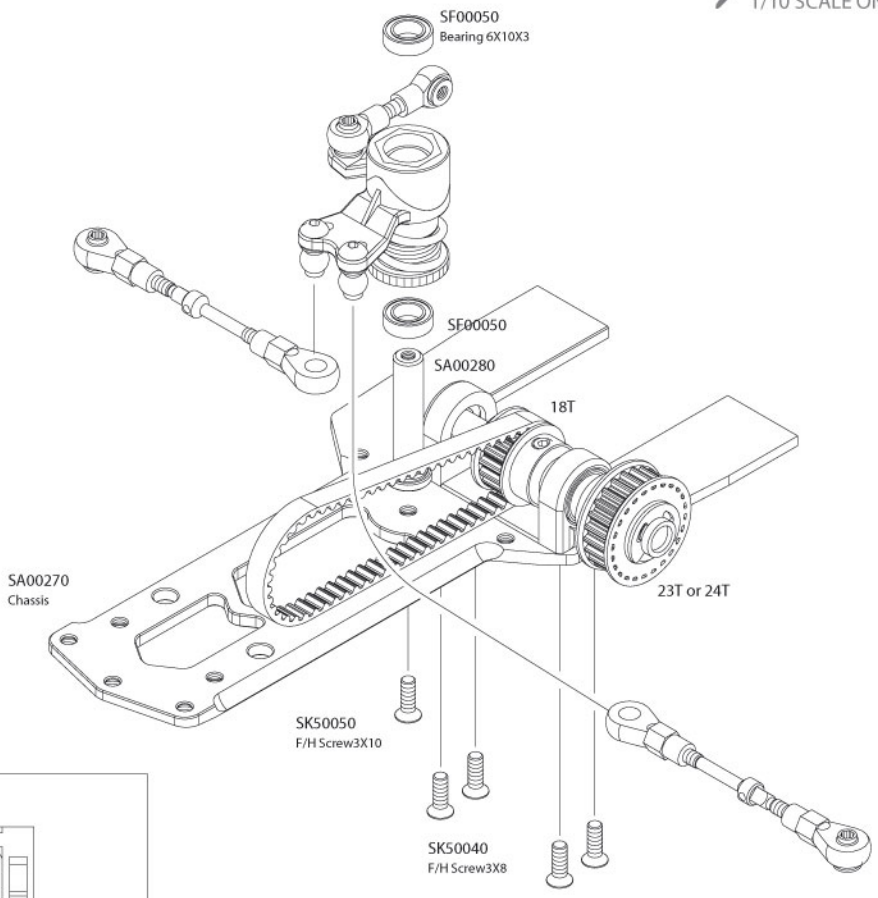

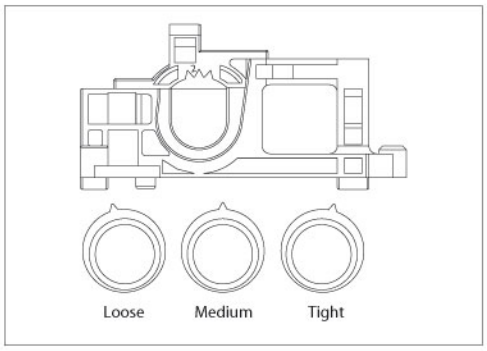

12 《Front Suspension》

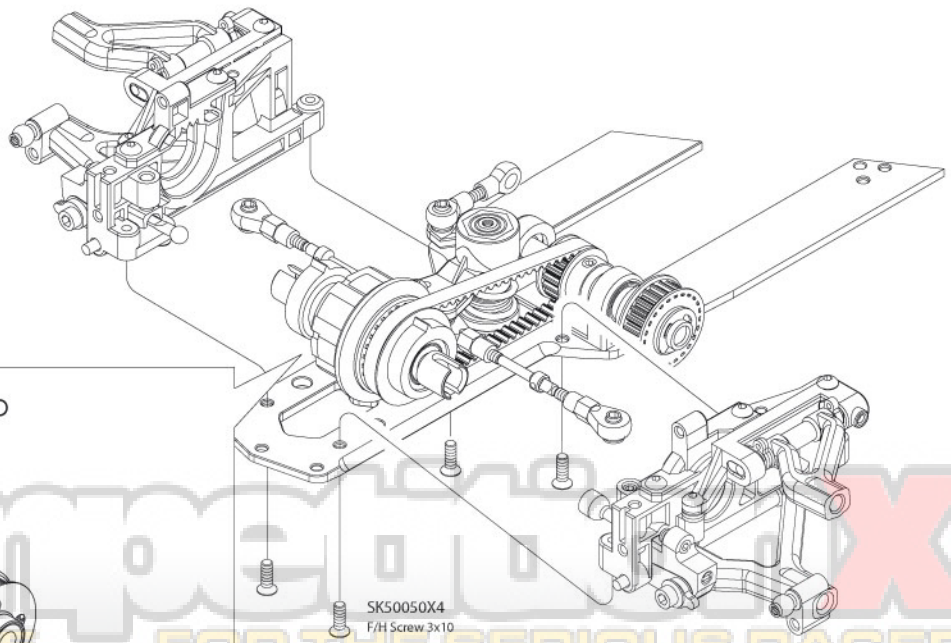

Front One Way Joint Cup

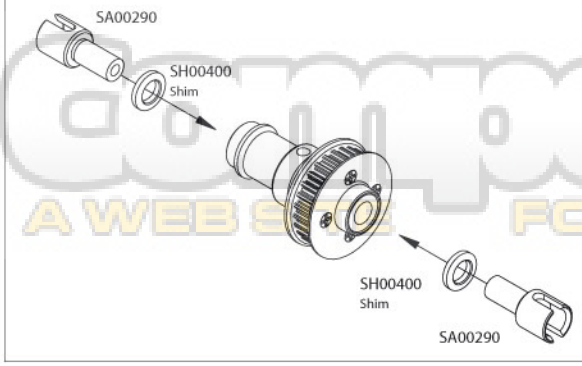

Competitionbox
A WEB SITE FOR THE SERIOUS RACER

Parts Bag 07

13 《Front / Rear Universal Joint》

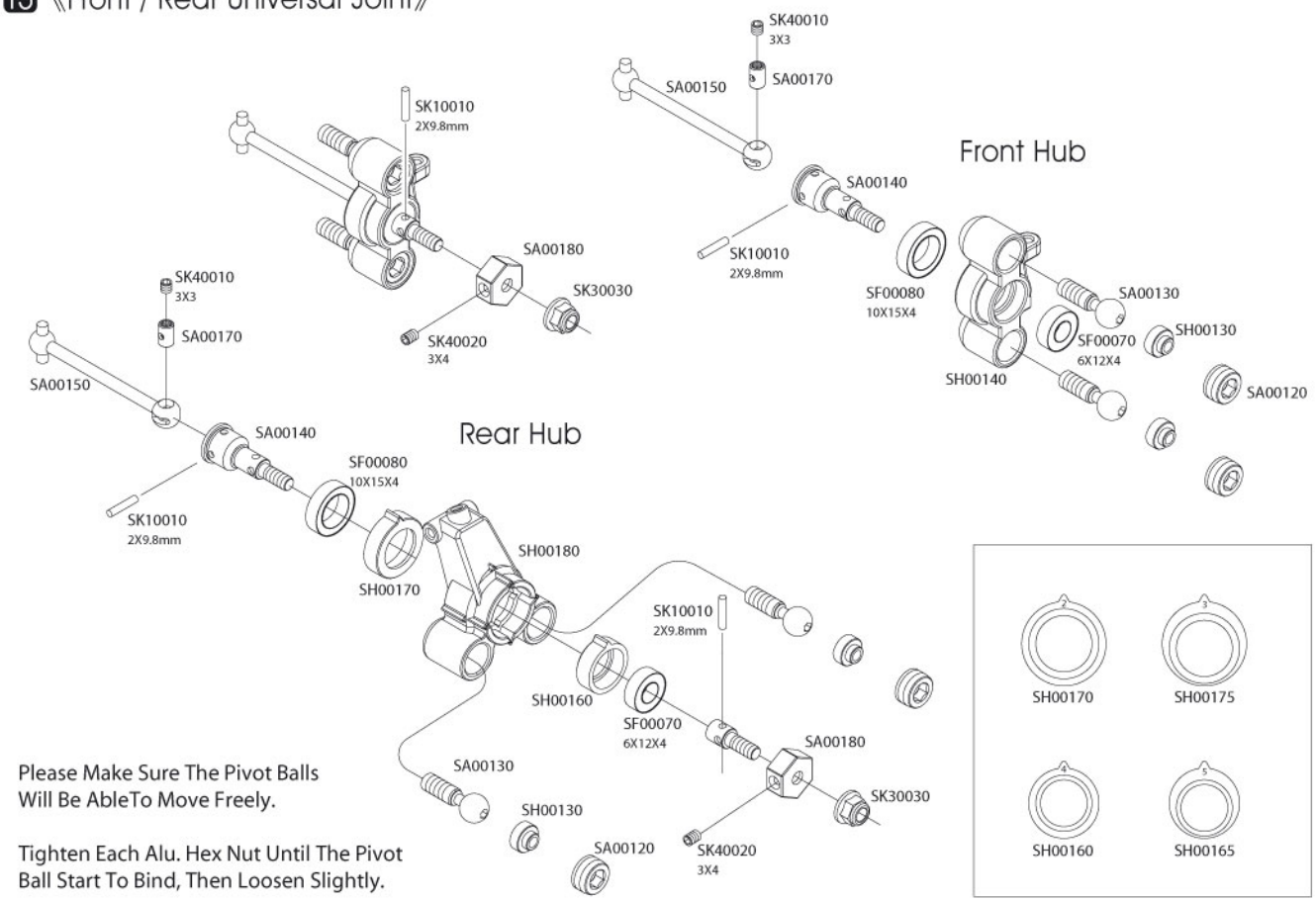

Please Make Sure The Pivot Balls Will Be AbleTo Move Freely.

Tighten Each Alu. Hex Nut Until The Pivot Ball Start To Bind, Then Loosen Slightly.

Parts Bag 08

14 《Shock Set》

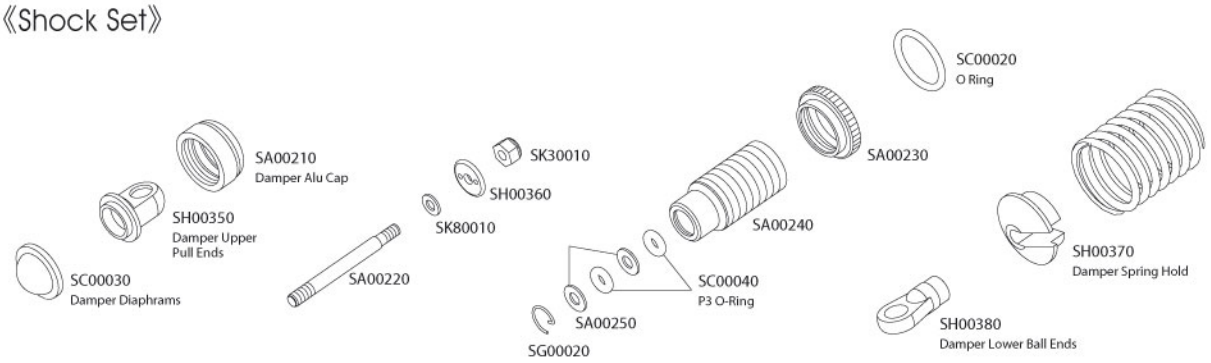

15 《Shock Set》

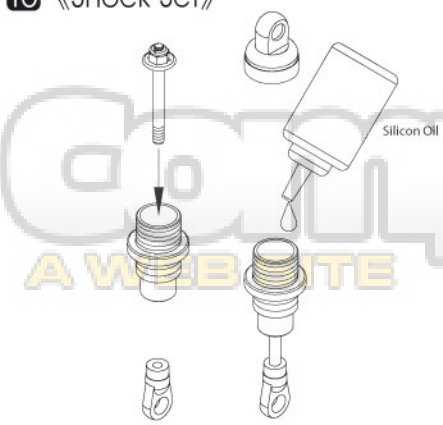

16 《Shock Set》

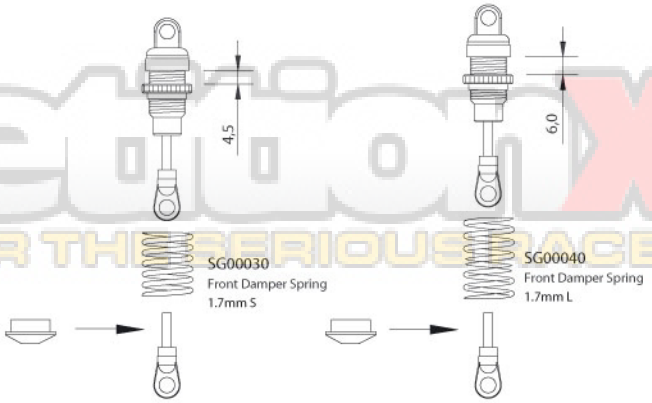

Competition X
A WEBSITE FOR THE SERIOUS RACER

Spirit
1/10 SCALE ON ROAD CAR

17 《Front Suspension》

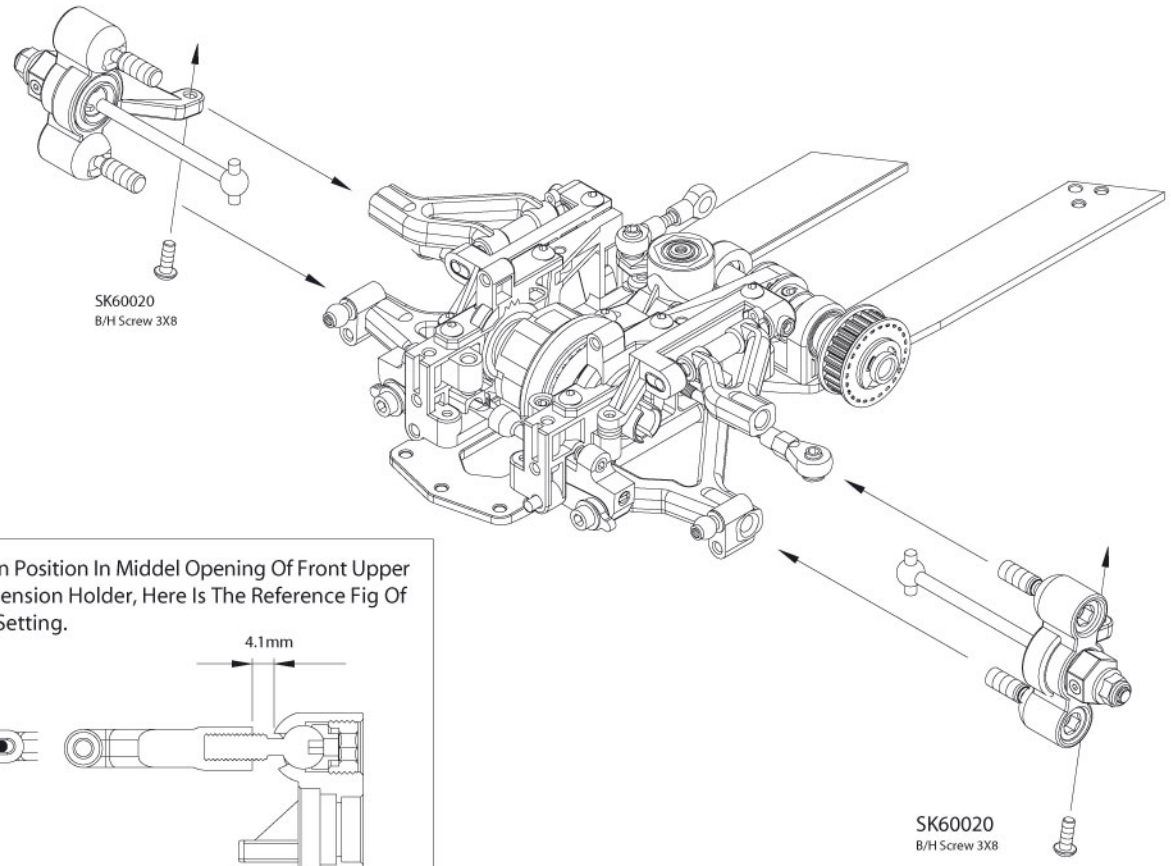

When Position In Middel Opening Of Front Upper Suspension Holder, Here Is The Reference Fig Of The Setting.

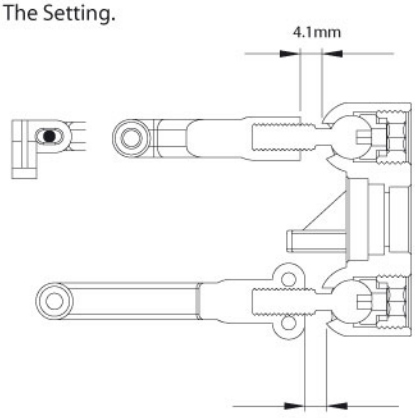

18 《Front Shock Stay》

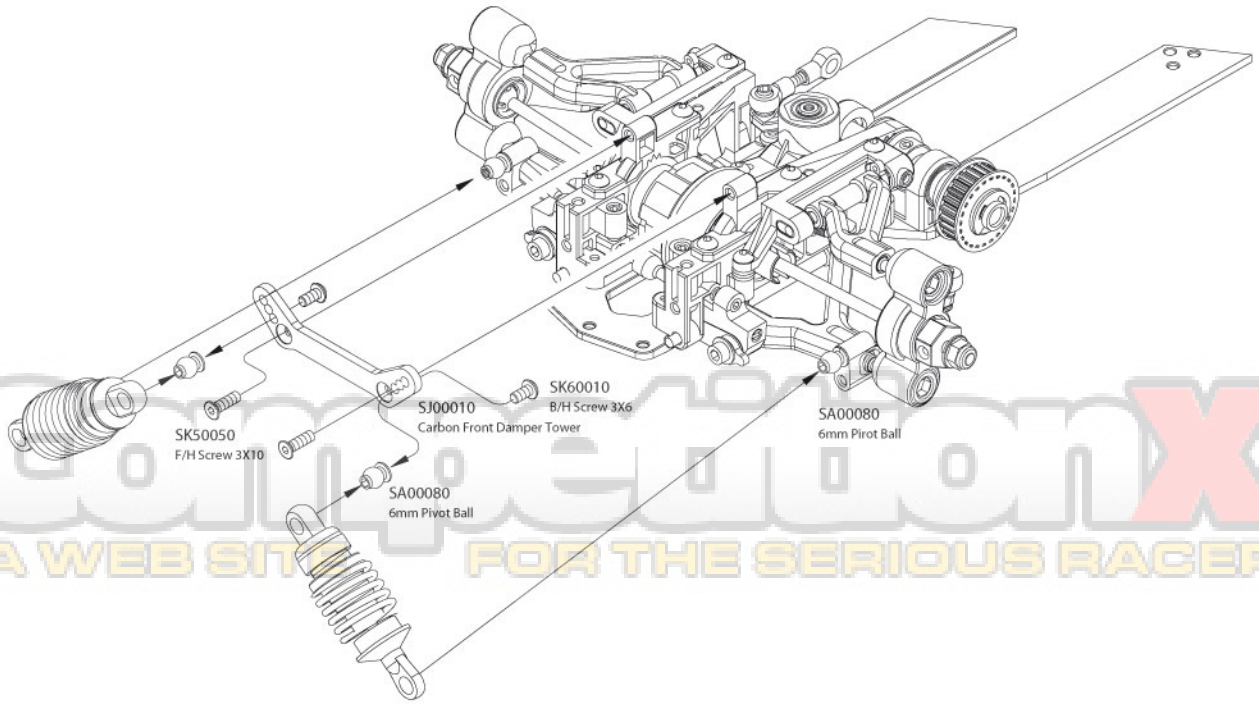

Competition X
A WEB SITE FOR THE SERIOUS RACER

19 《Front Body Mount For VDS》

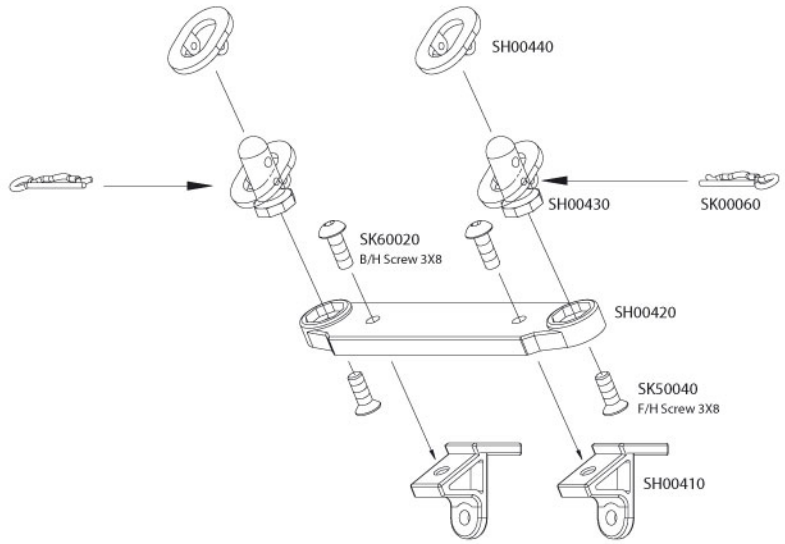

20 《Front Body Mount》

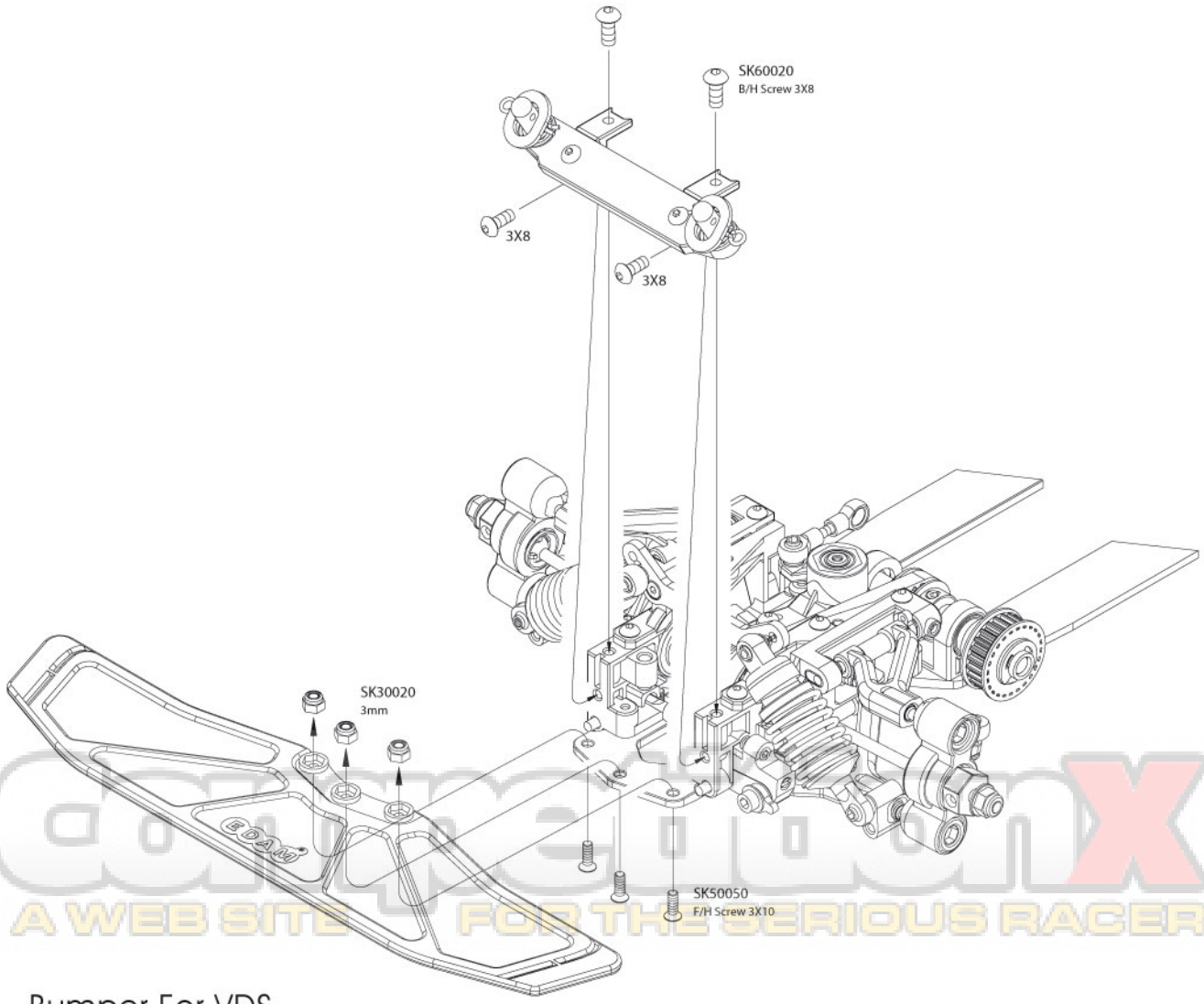

Bumper For VDS

A WEB SITE FOR THE SERIOUS RACER

21 《Bumper For Touring Car》

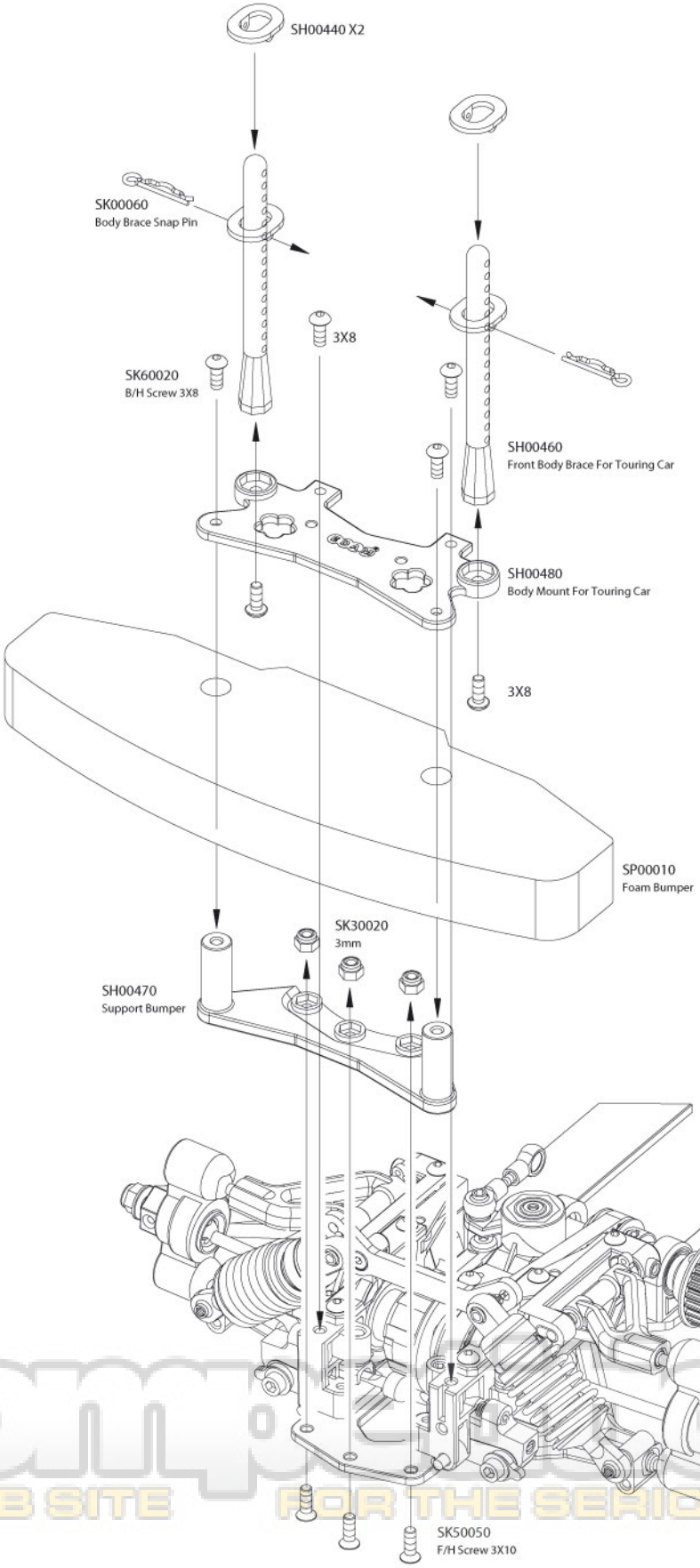

CompetitionX
A WEB SITE FOR THE SERIOUS RACER

Parts Bag 11

22 《Adjustable Anti-Roll Bar》

Options Parts, Not Included With Touring Kit

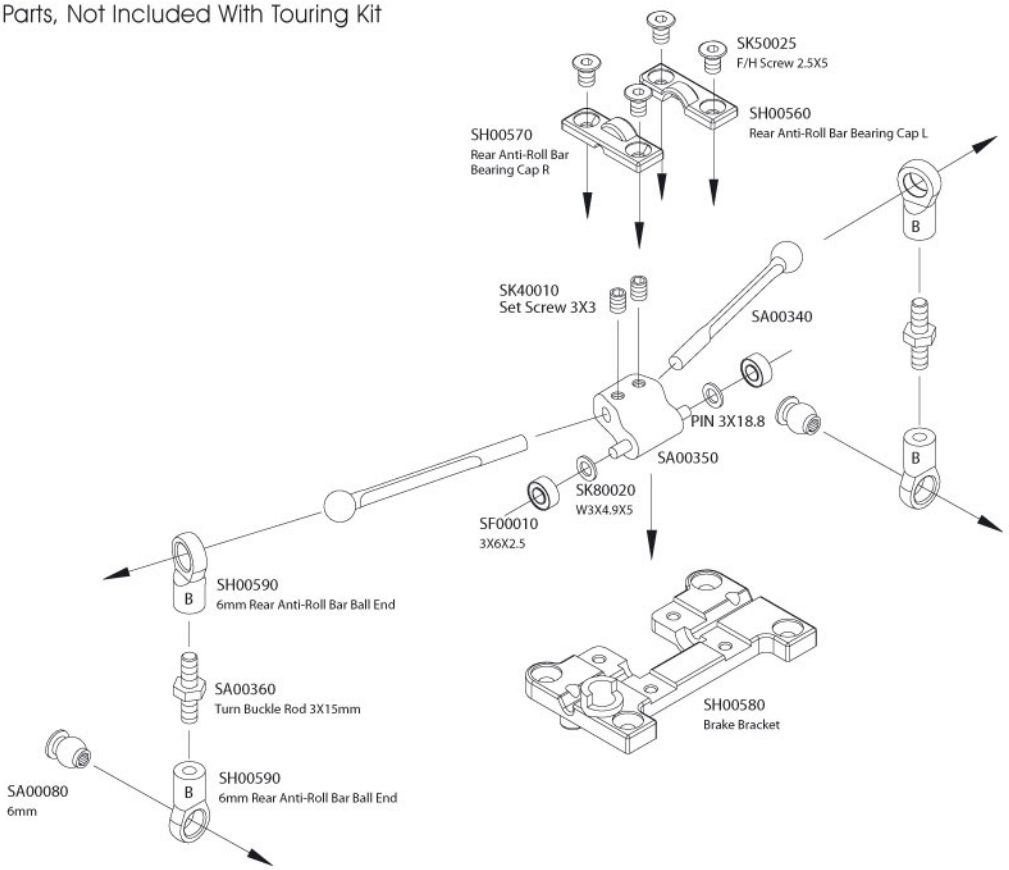

23 《Anti-Roll Bar》

Standard

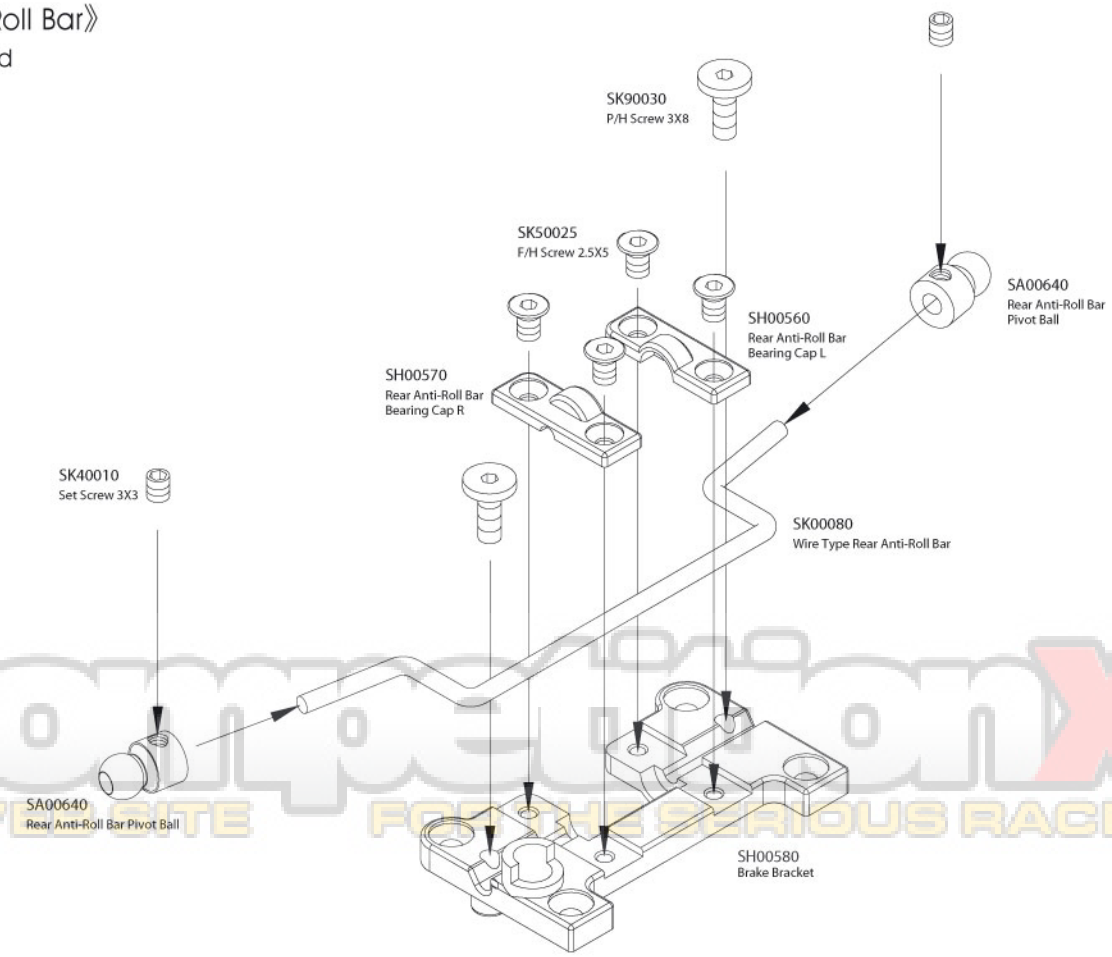

Competition X
A WEB SITE FOR THE SERIOUS RACER

Parts Bag 12

24 《2 Speed Changer》

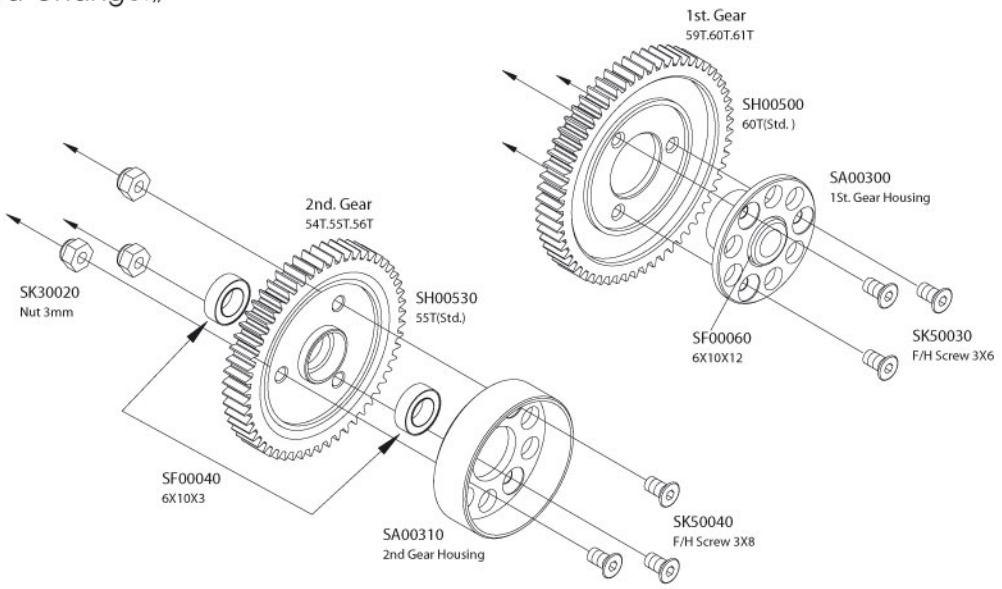

Parts Bag 13

25 《2 Speed Changer》

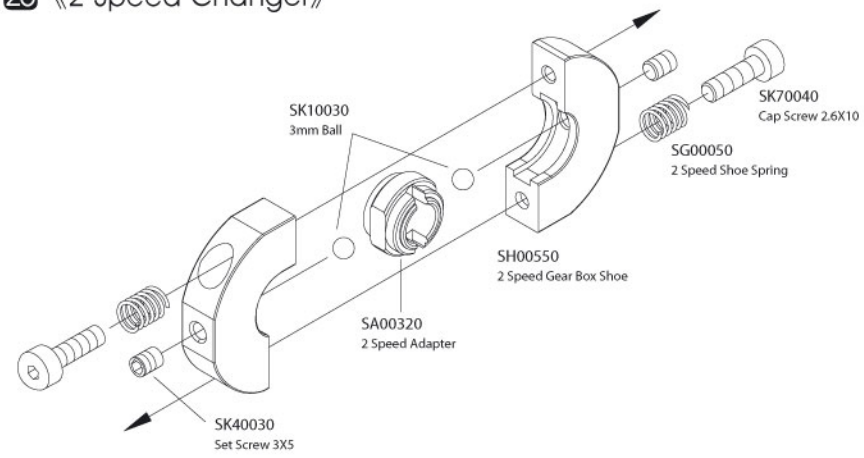

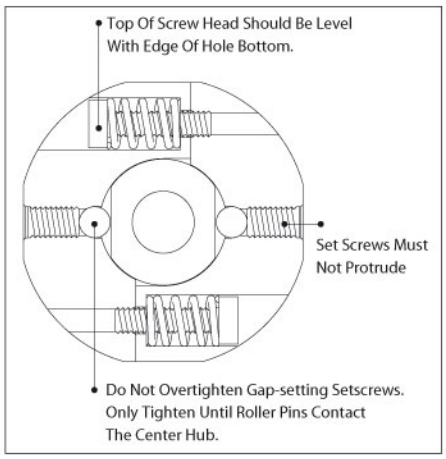

26 《2 Speed Changer》

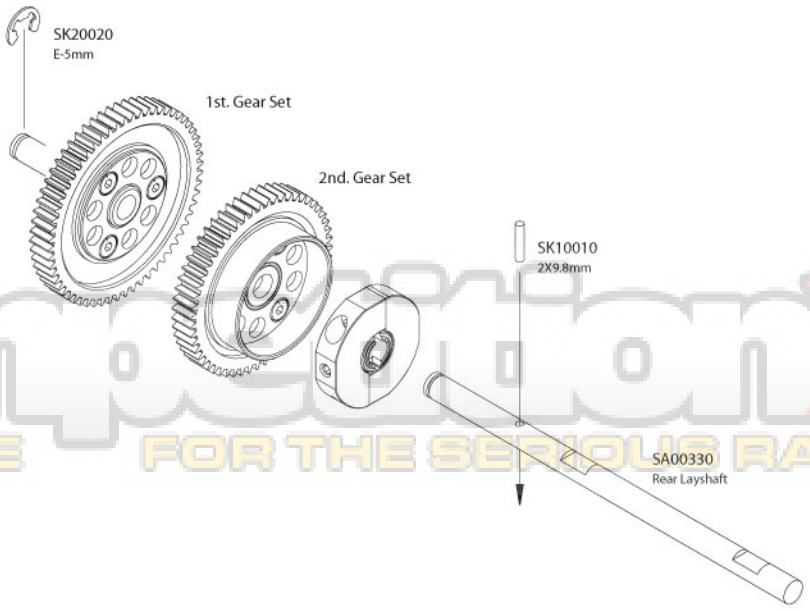

CompetitionX
A WEB SITE FOR THE SERIOUS RACER

Parts Bag 14

27 《Rear Bulkhead》

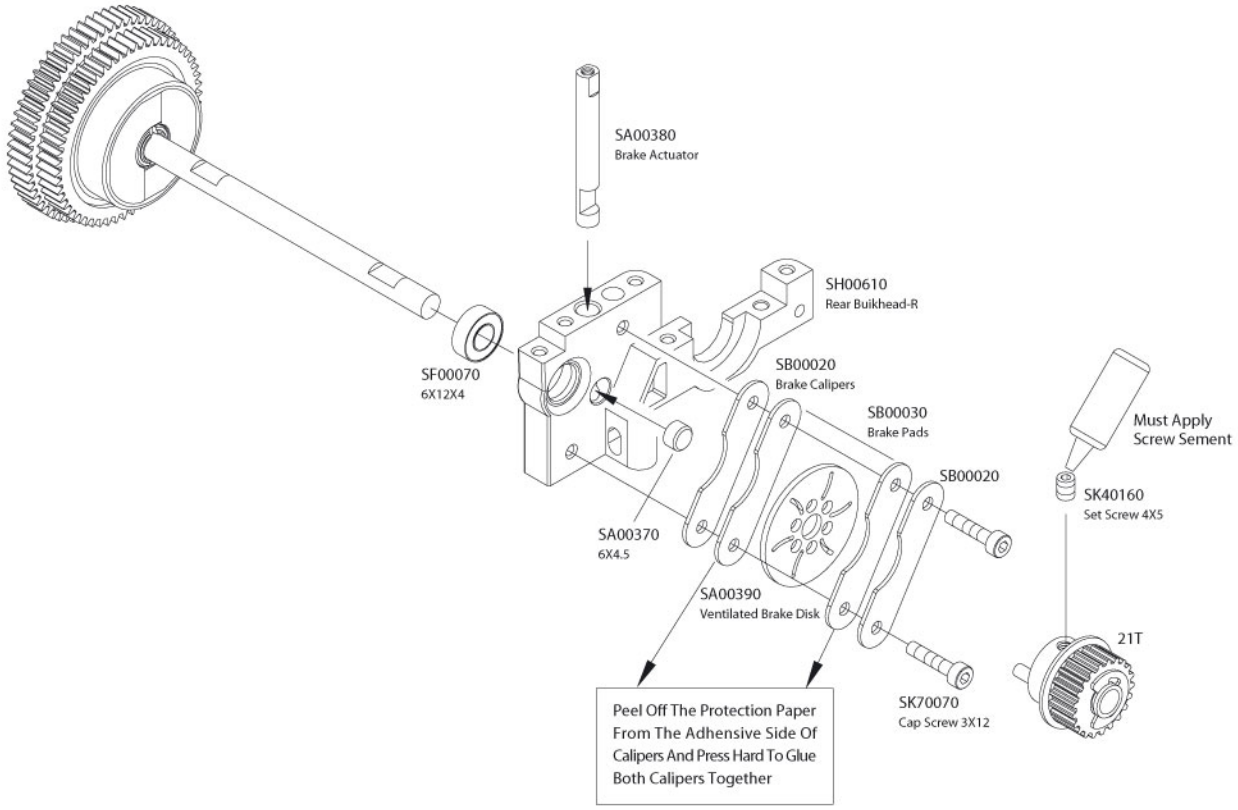

28 《Rear Bulkhead》

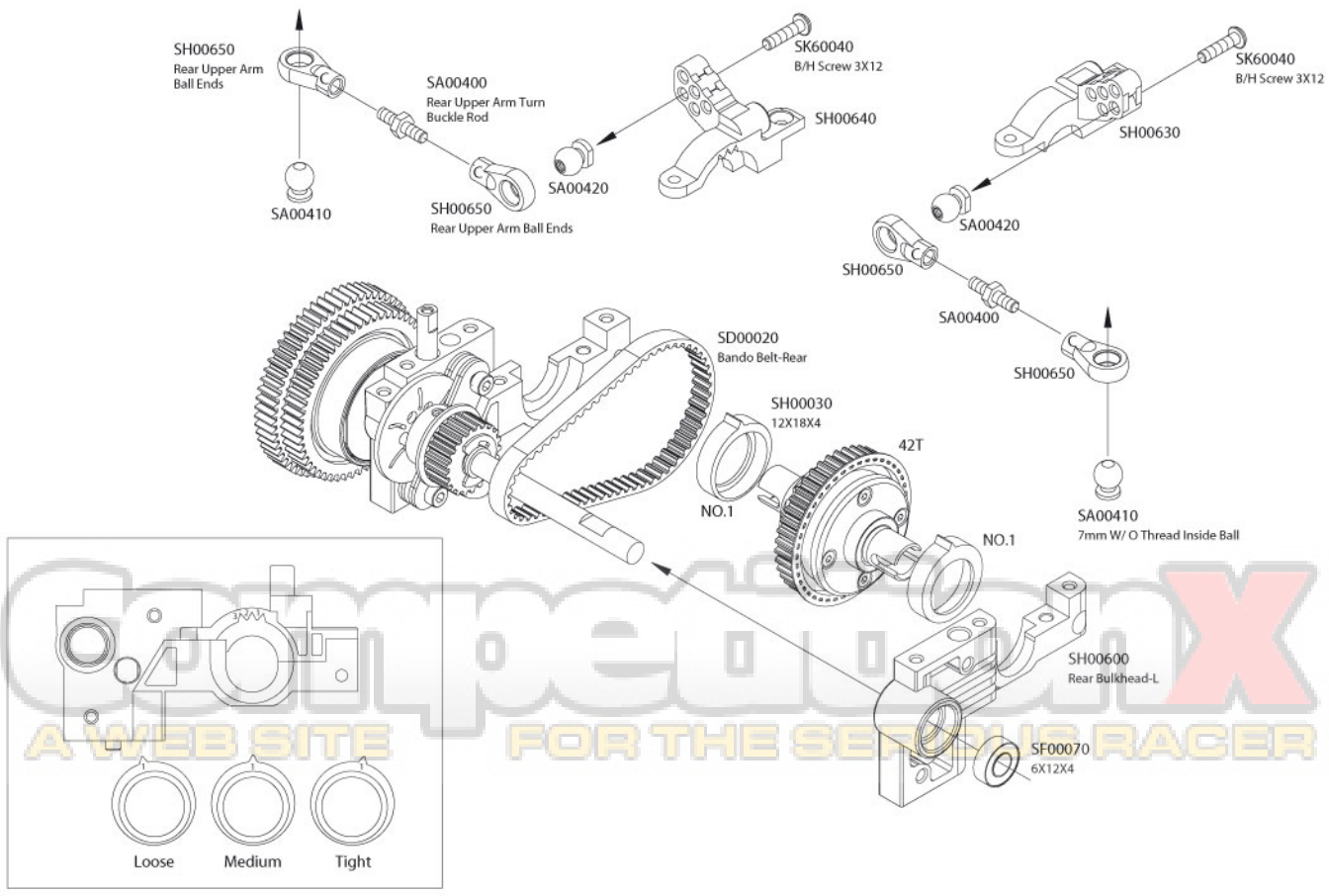

Competition X
A WEB SITE FOR THE SERIOUS RACER

Spirit
1/10 SCALE ON ROAD CAR

29 《Rear Bulkhead》

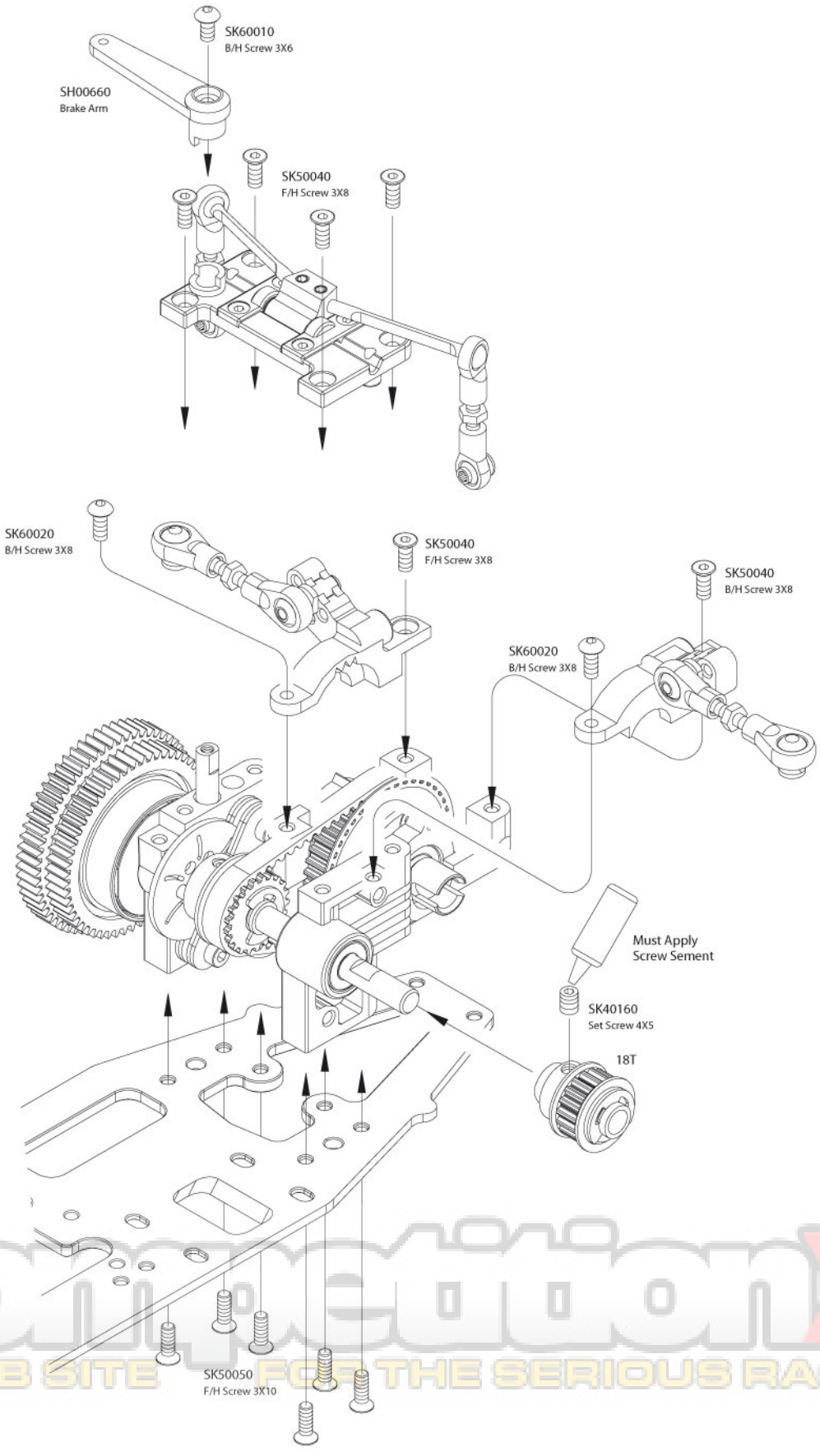

CompetitionX
A WEB SITE FOR THE SERIOUS RACER

Parts Bag 15

30 《Rear Suspension》

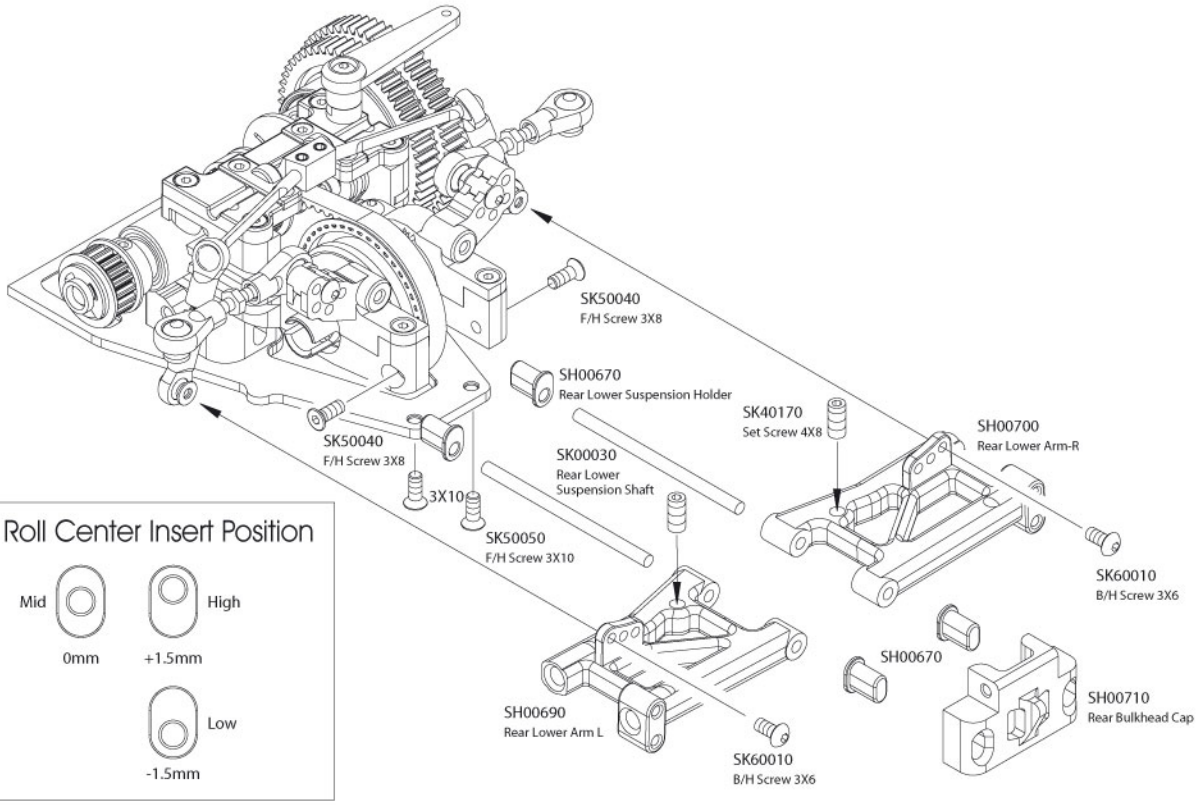

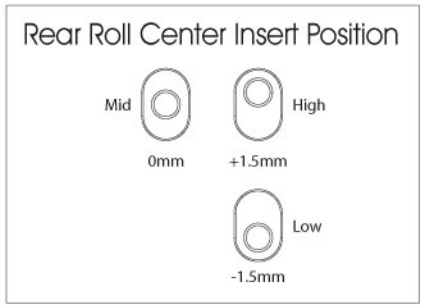

31 《Rear Suspension》

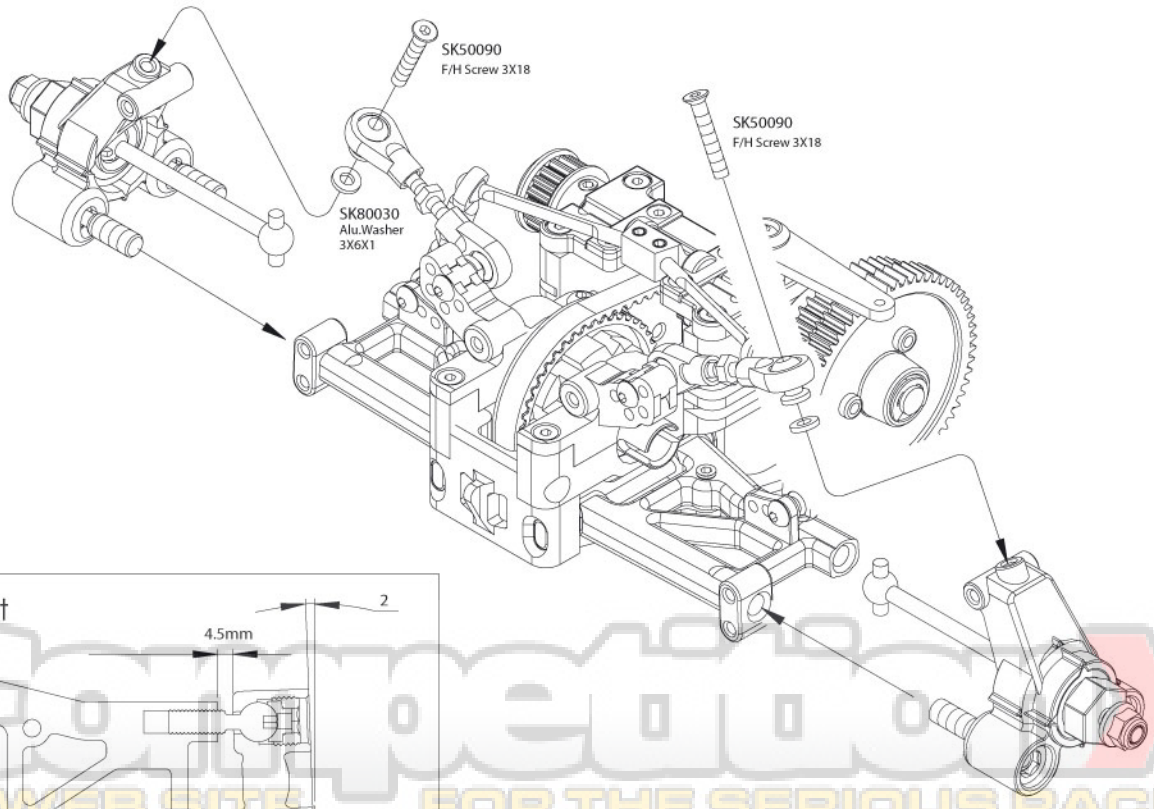

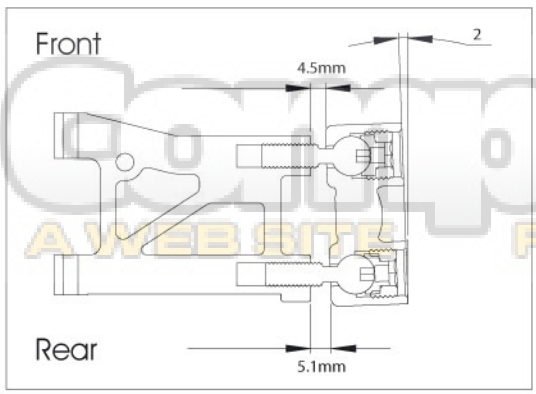

Competitex
A WEB SITE FOR THE SERIOUS RACER

32 《Rear Shock》

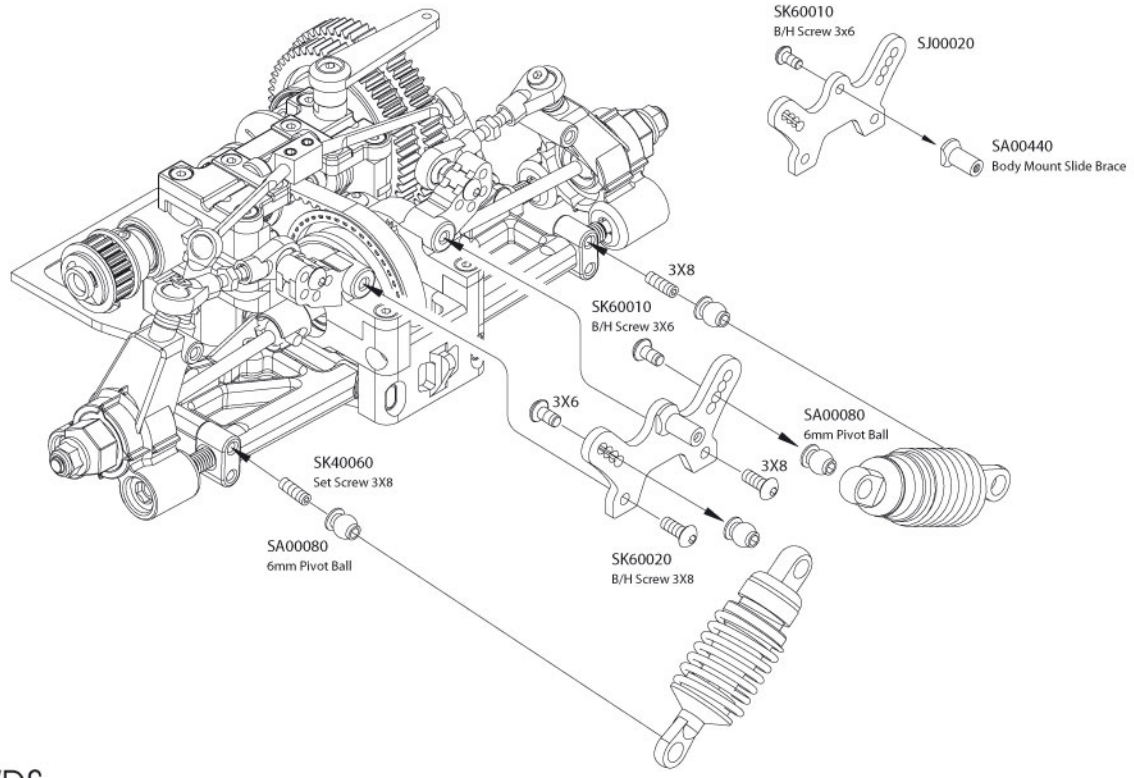

For VDS

33 《Rear Body Mount》

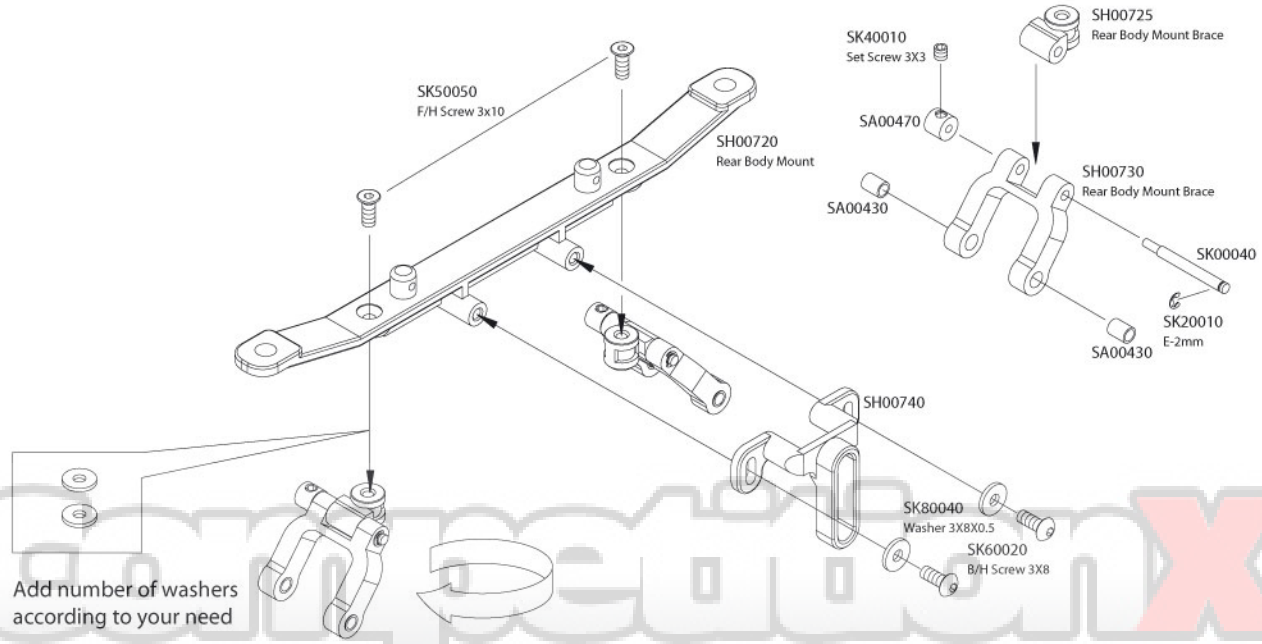

competitionX
A WEB SITE FOR THE SERIOUS RACER

For VDS

Parts Bag 17

34 《Rear Shock》

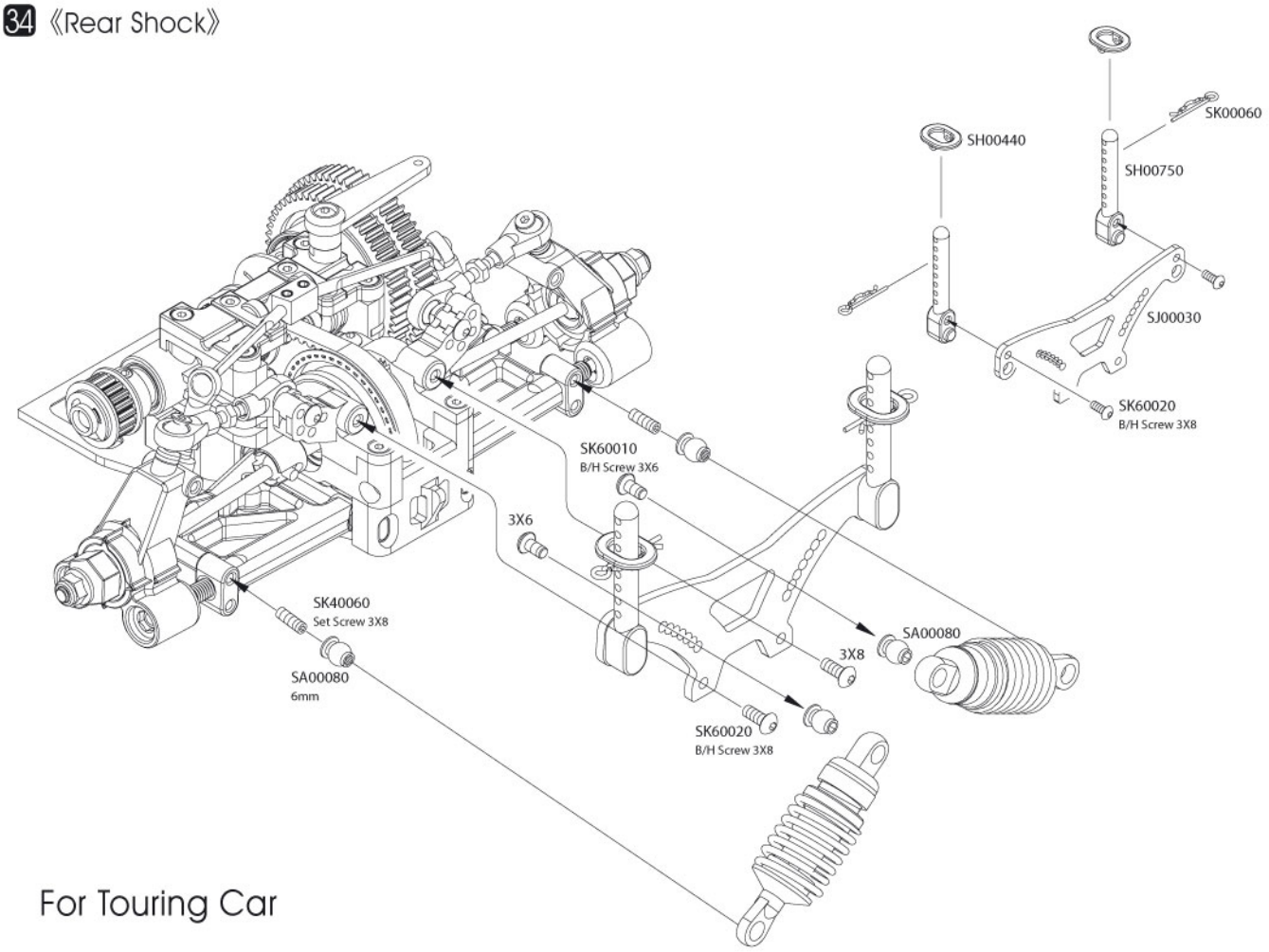

For Touring Car

Parts Bag 18

35 《Center Bulk》

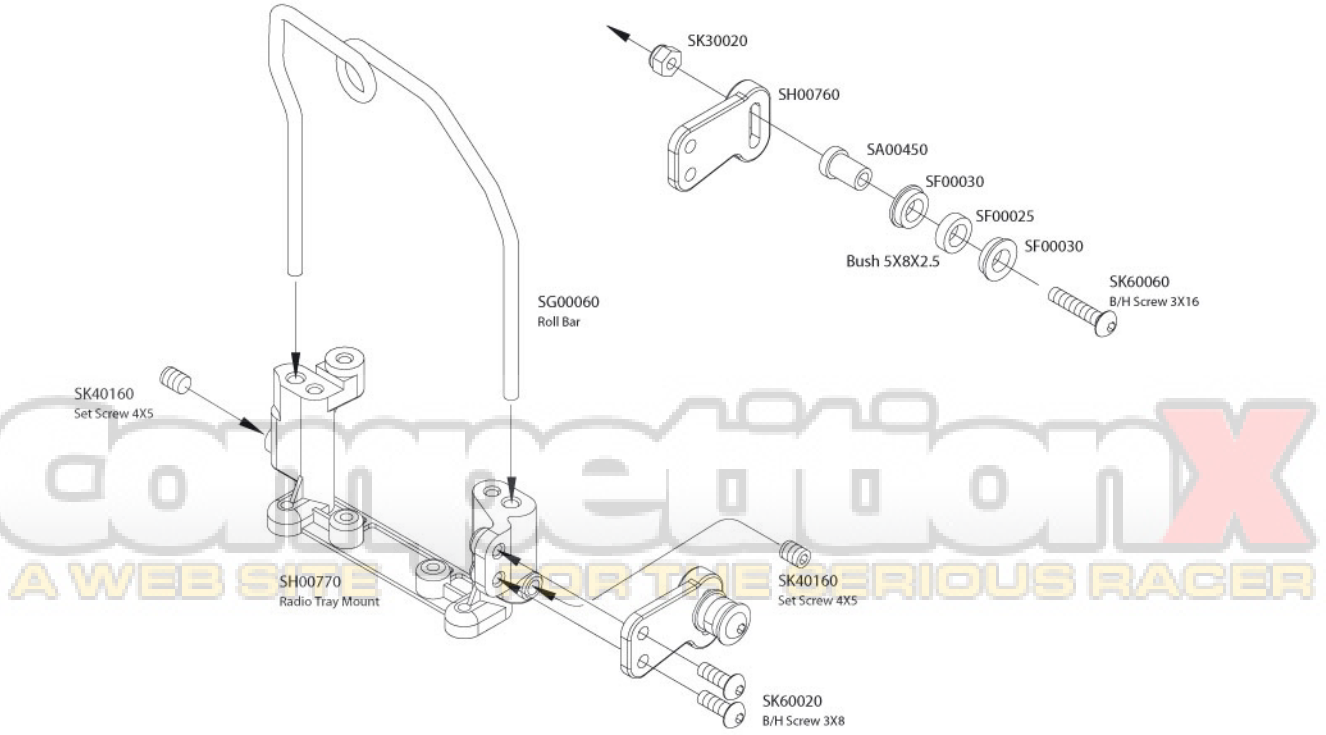

competitionX
A WEB SITE FOR THE SERIOUS RACER

36 《Center Bulk》

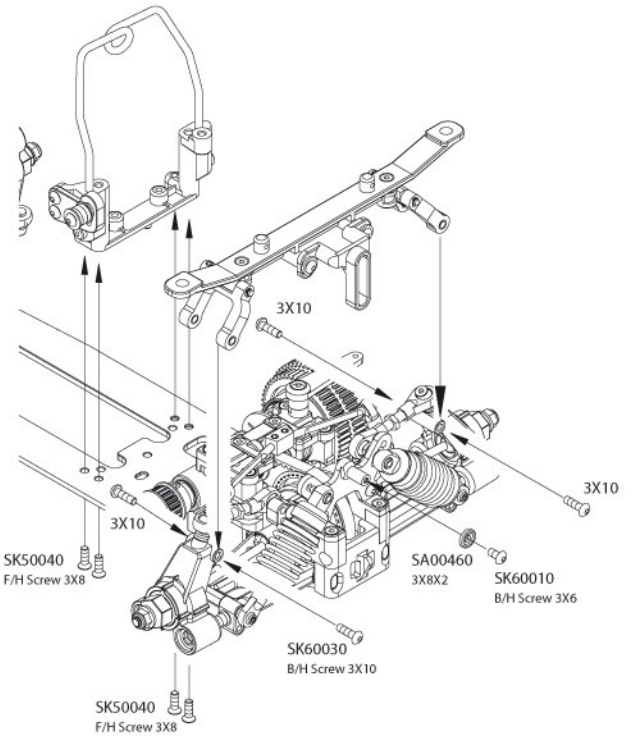

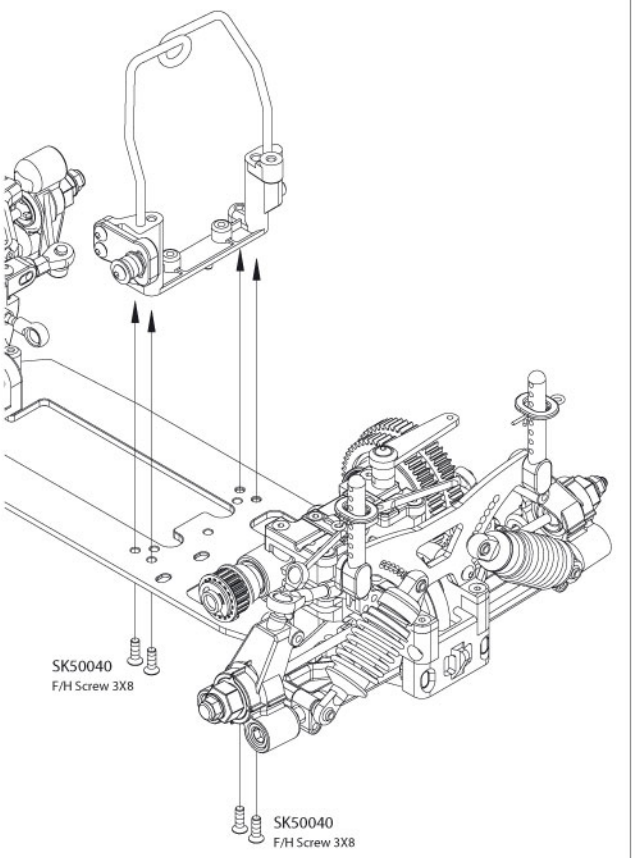

37 《Battery》

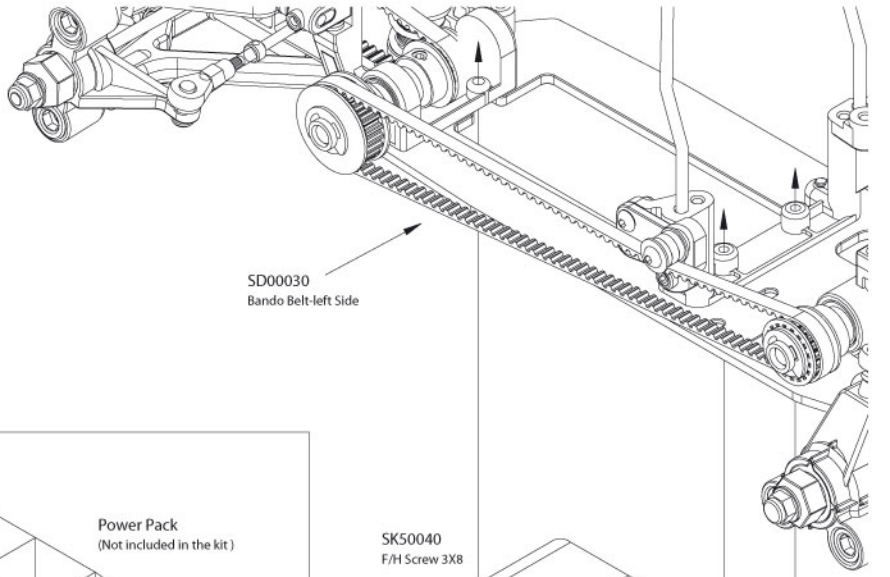

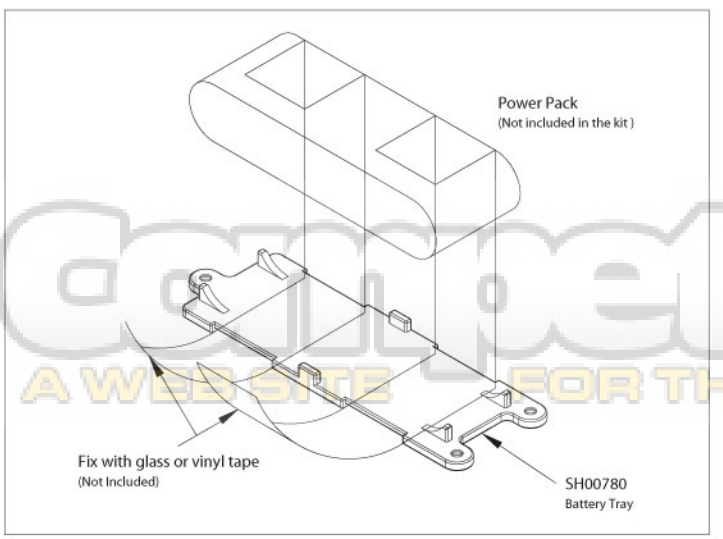

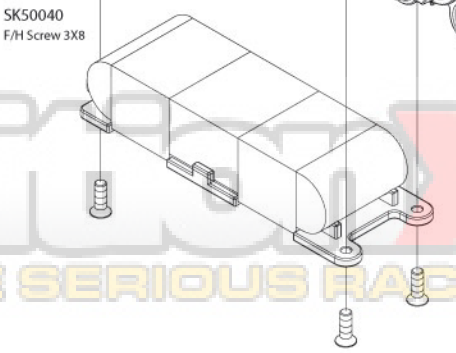

Competition X
A WEB SITE FOR THE SERIOUS RACER

Parts Bag 19

38 《Radio Plate》

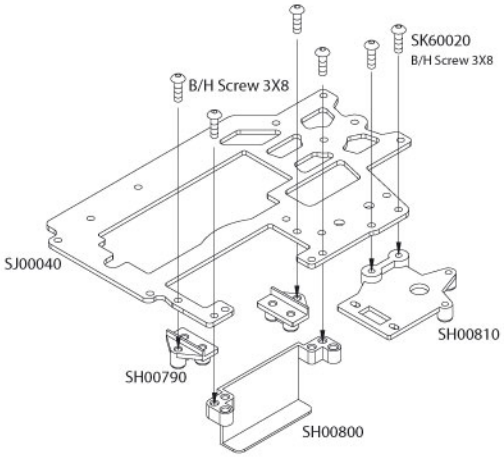

39 《Fuel Tank》

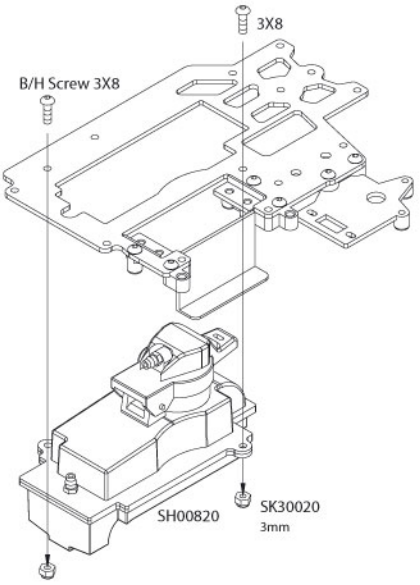

40 《Throttle Servo》

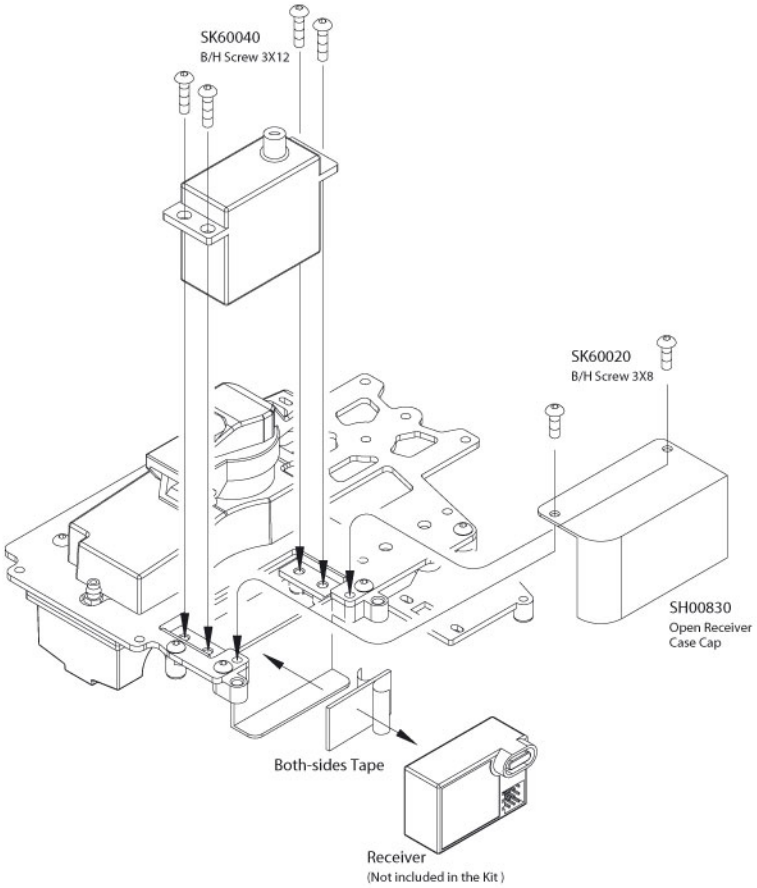

Parts Bag 19

41 《Steering Servo》

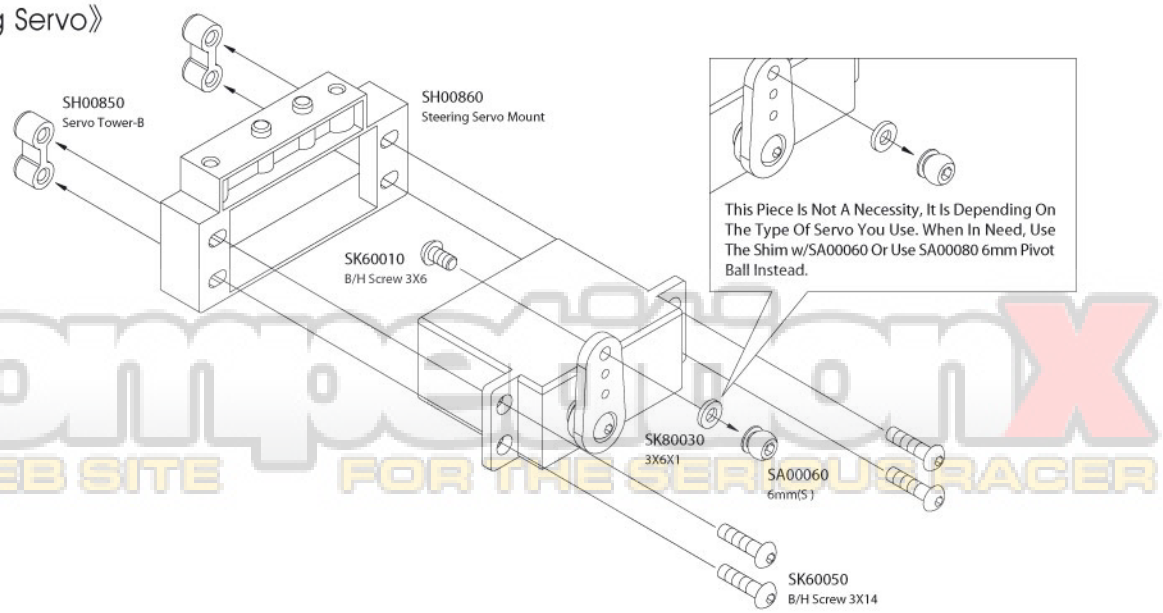

CompetitionX
A WEB SITE FOR THE SERIOUS RACER

42 《Steering Servo》

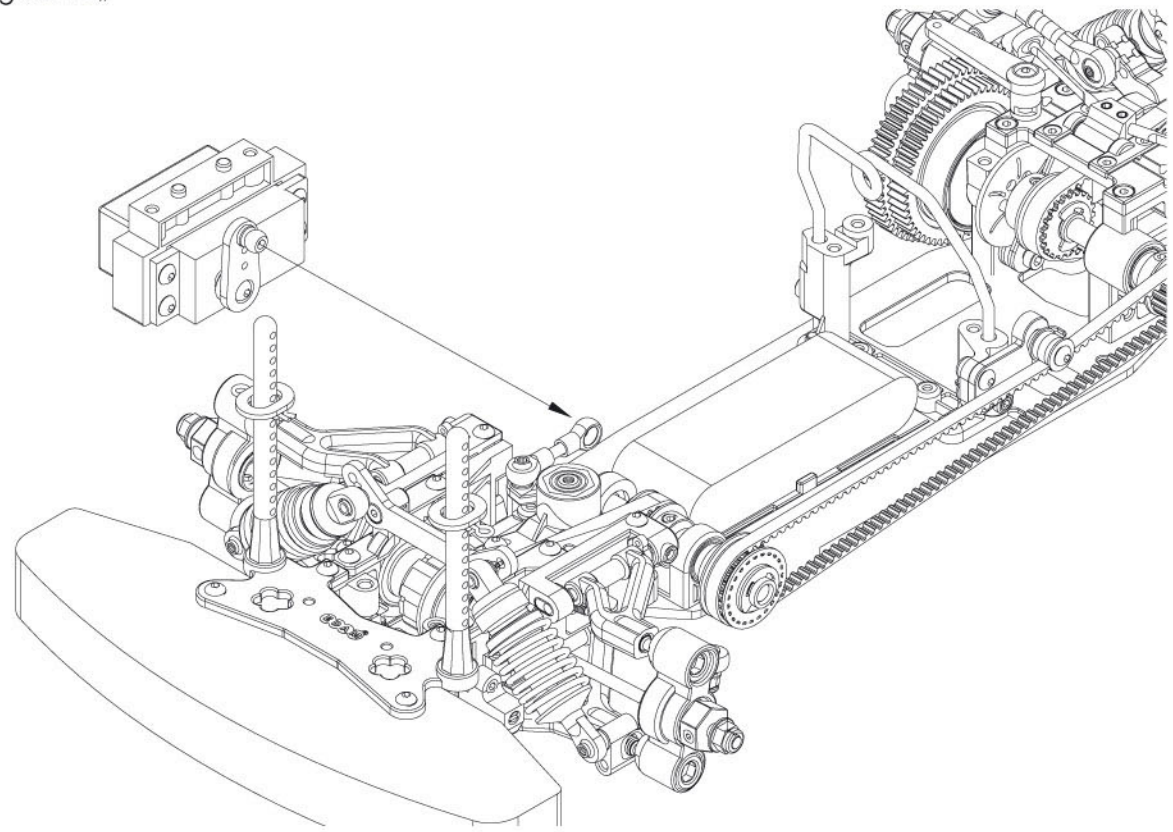

43 《Radio Plate》

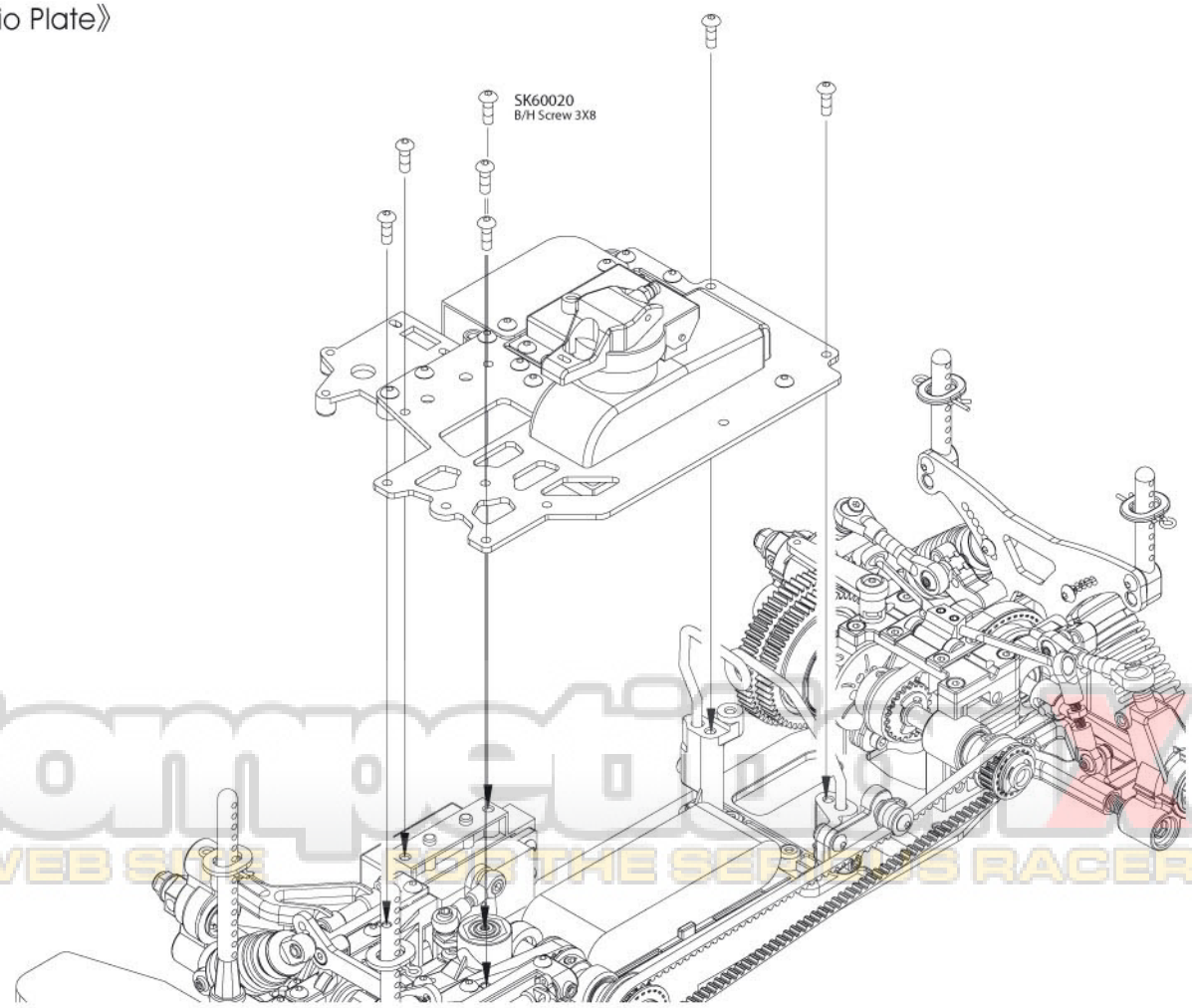

A WEB SITE FOR THE SERIOUS RACER

44 《Engine》

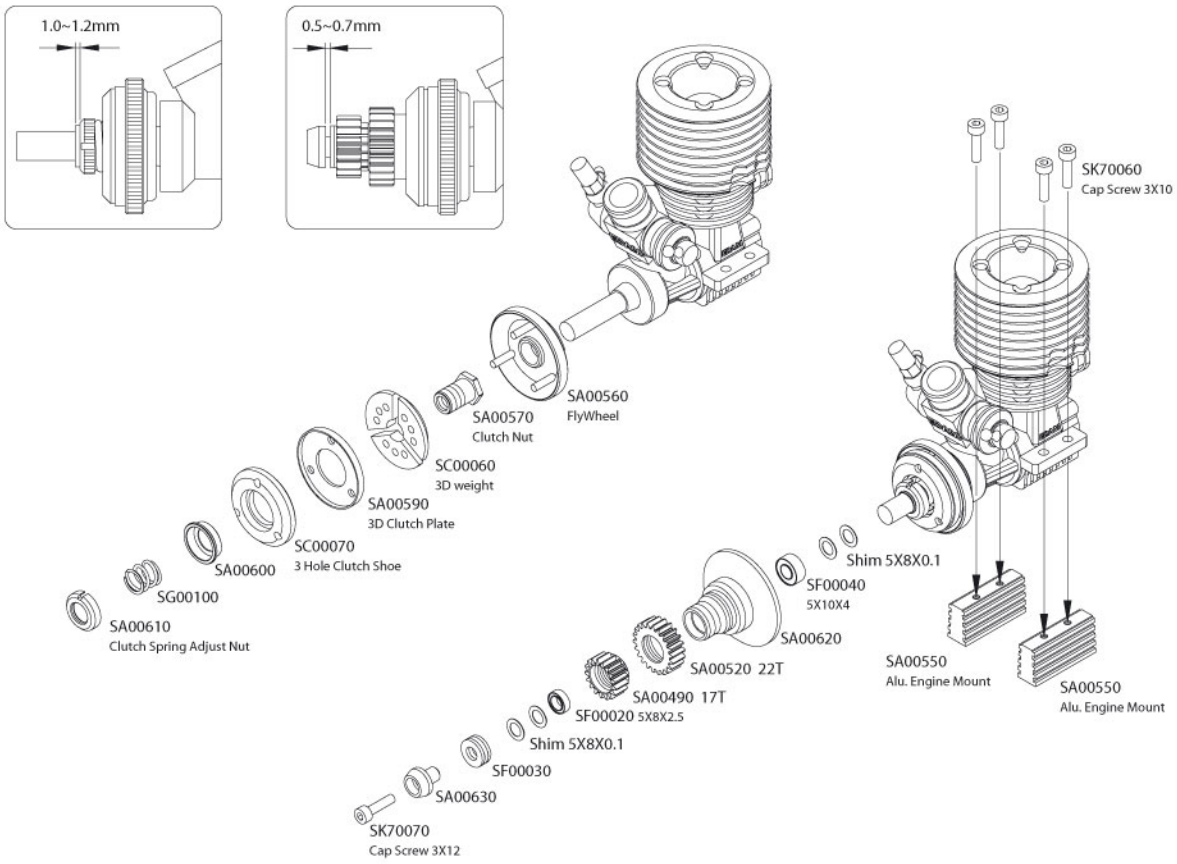

45 《Engine》

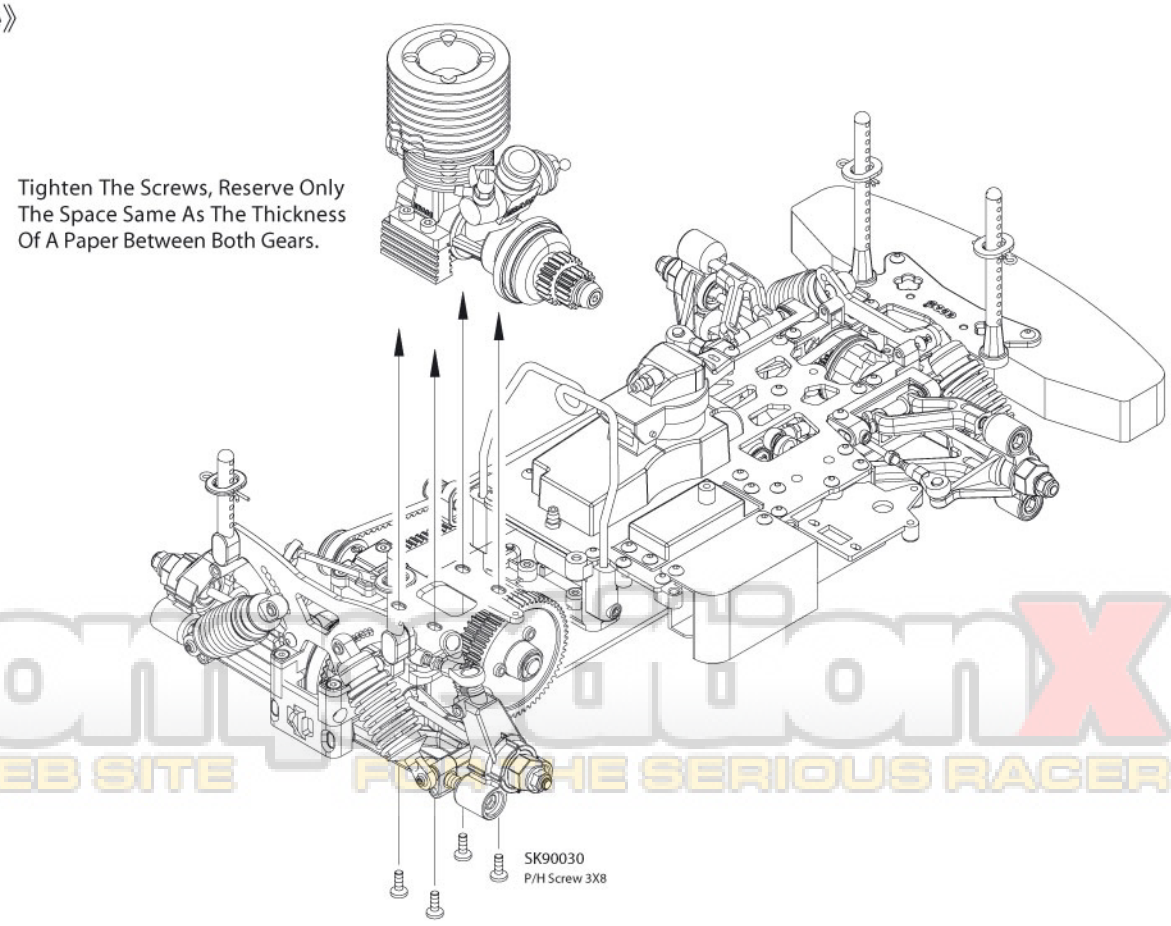

CompetitionX
A WEB SITE FOR THE SERIOUS RACER

Spirit 1/10 SCALE ON ROAD CAR

46 《Throttle Linkage》

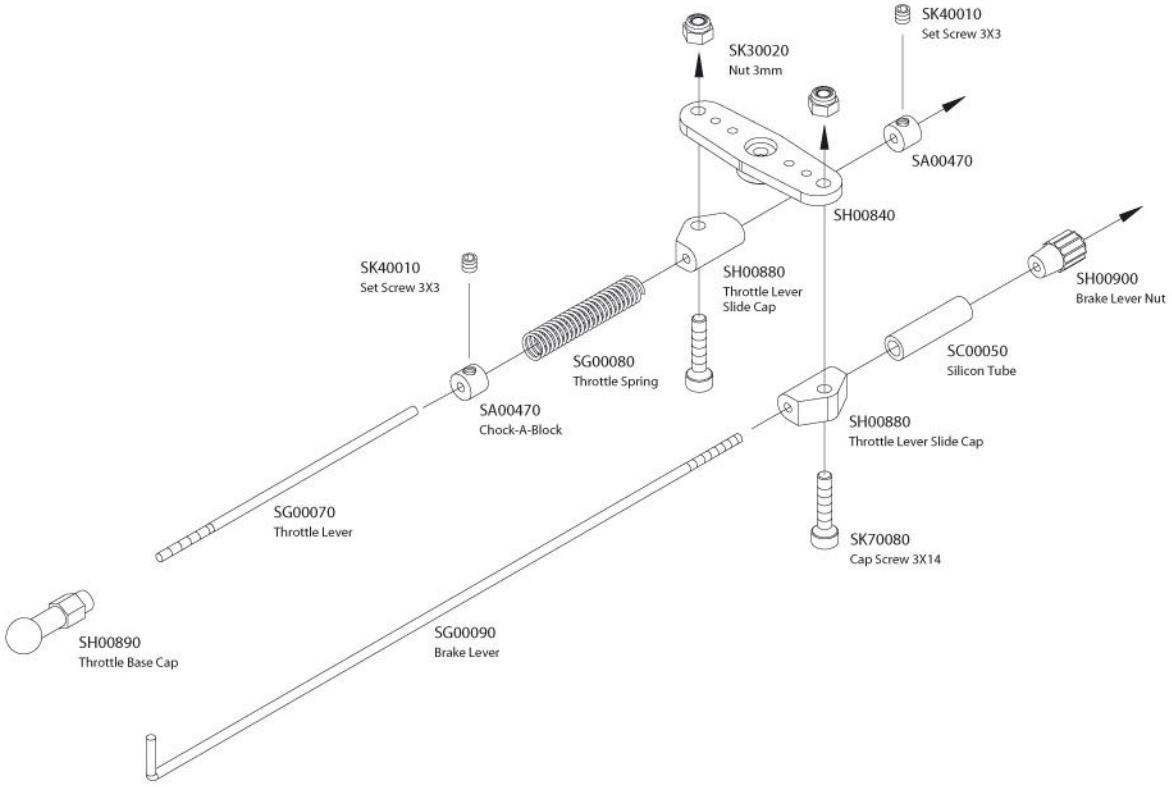

47 《Throttle Linkage》

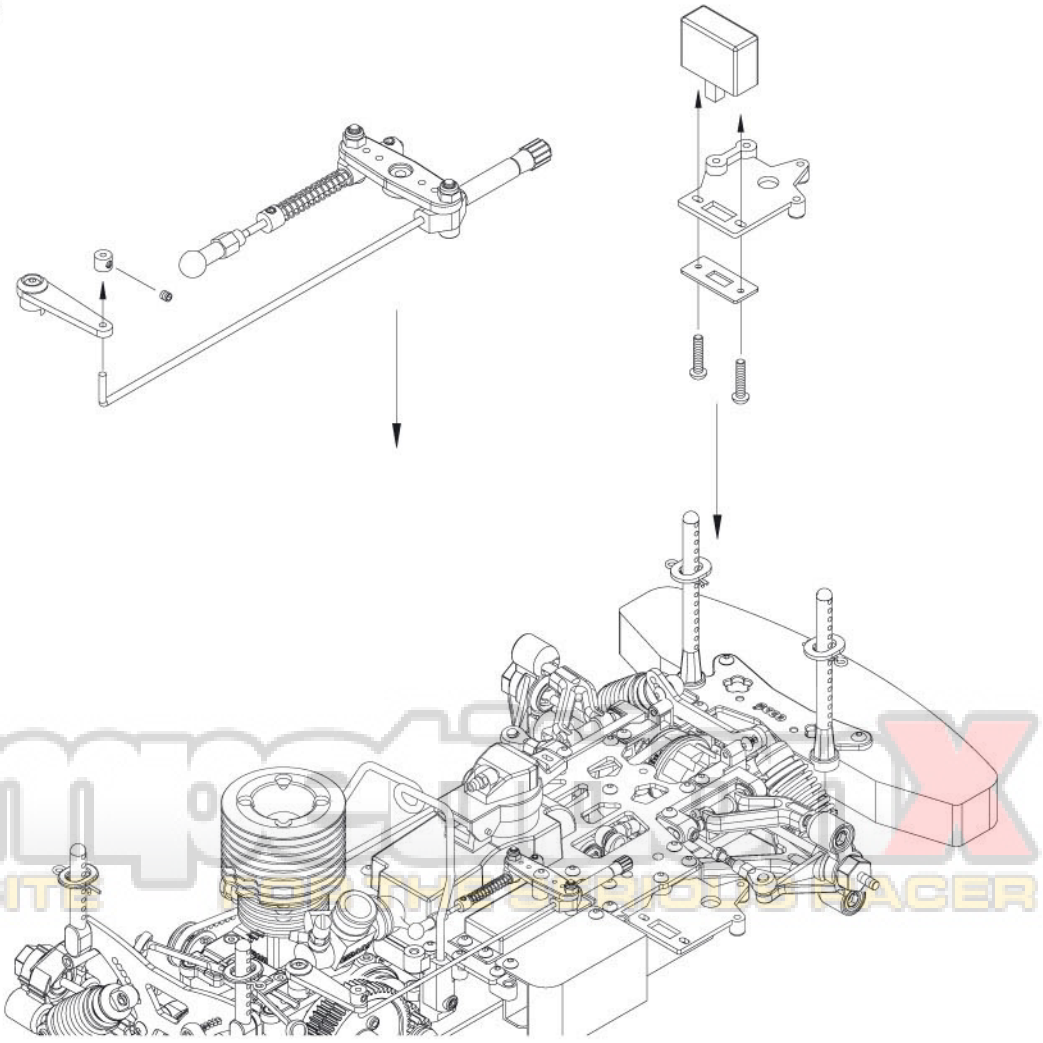

Competition X
A WEB SITE DEDICATED TO RC RACING

48 《Adjustable Buckle Belt》

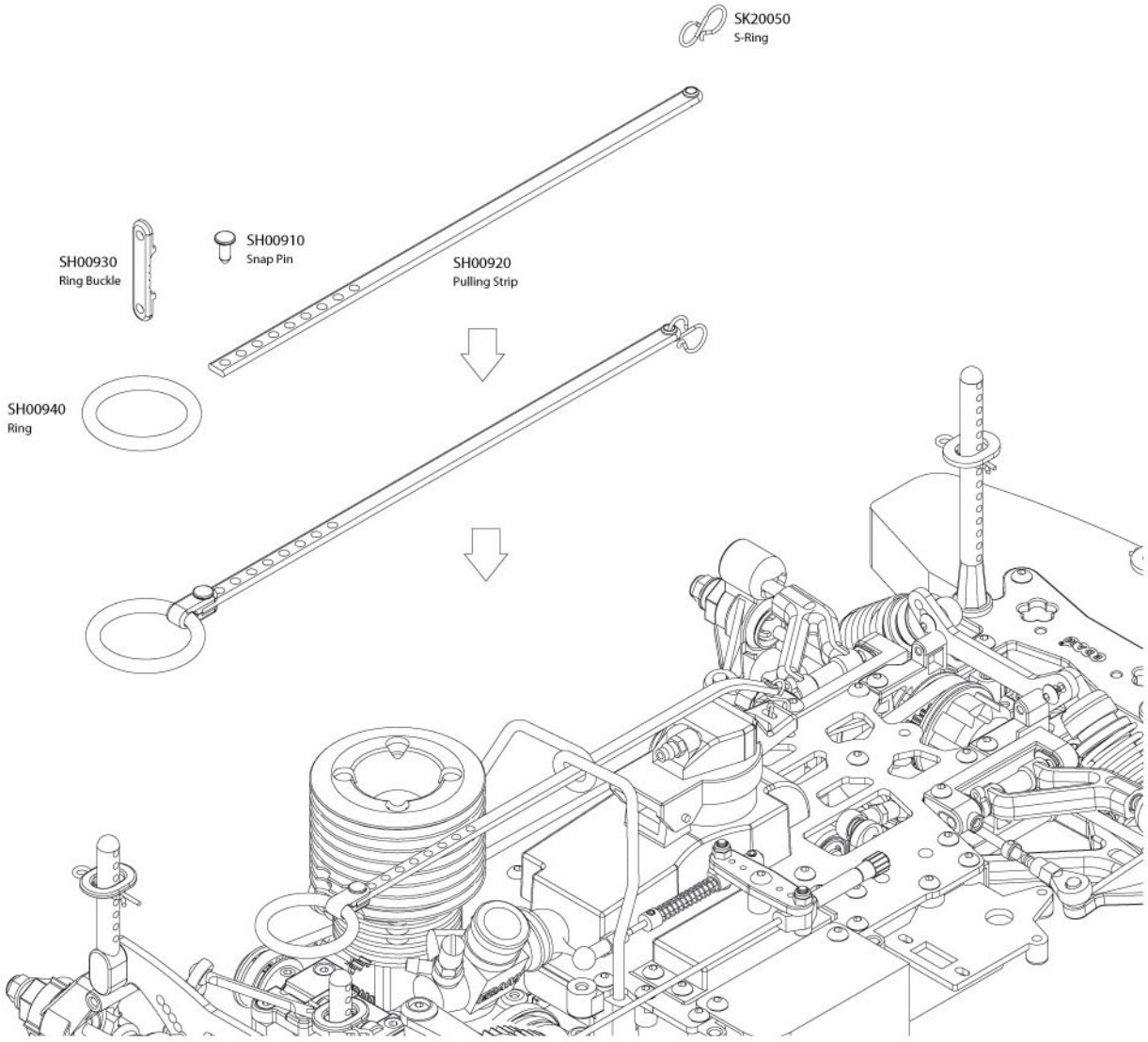

49 《Foam Tire》

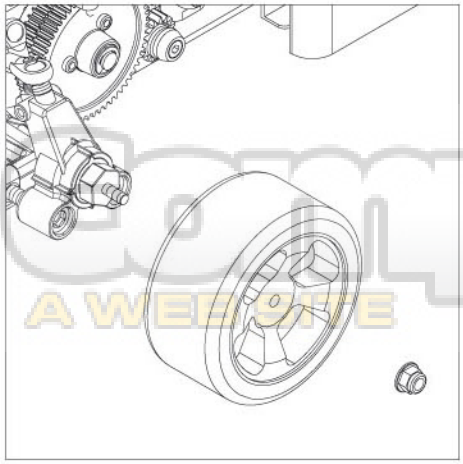

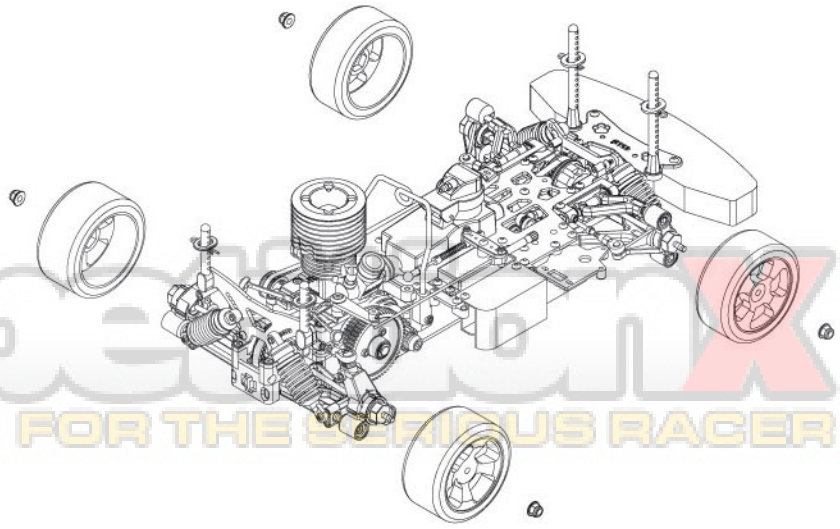

Tires Not Included, Unless Otherwise Noted

competitionX
A WEBSITE FOR THE SERIOUS RACER

Spirit
1/10 SCALE ON ROAD CAR

50 《Muffler》

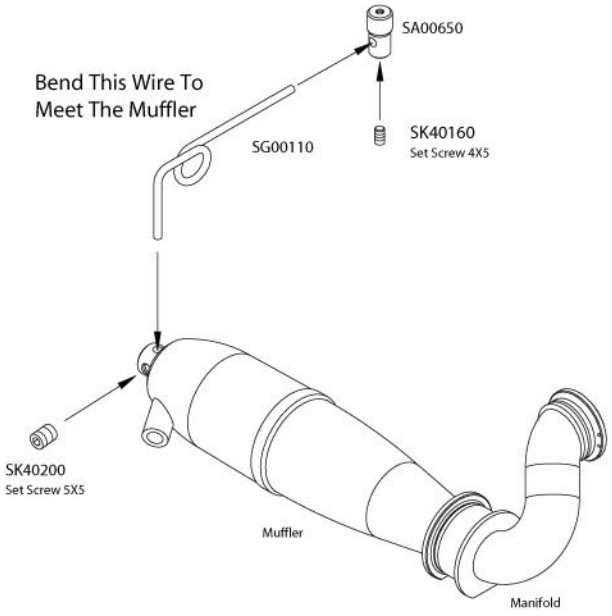

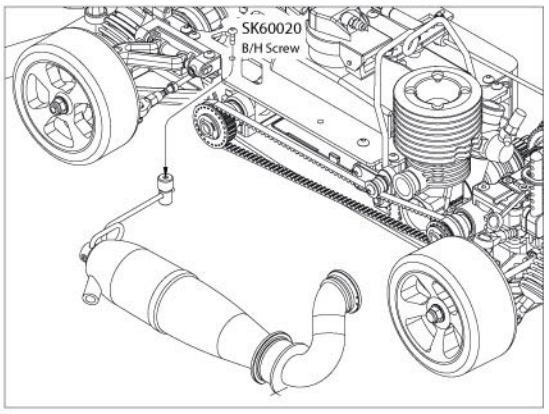

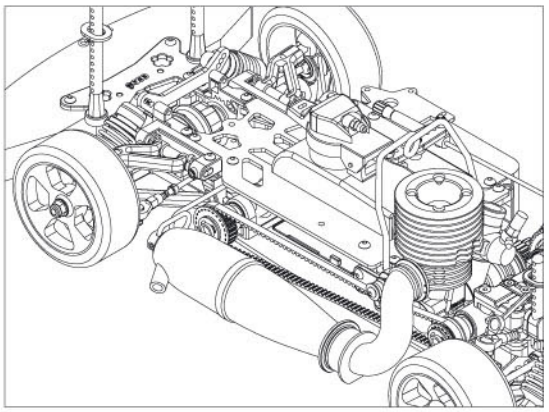

51 《Engine Control Linkage Adjustment》

Neutral

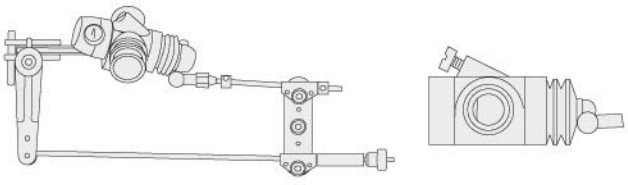

Throttle High

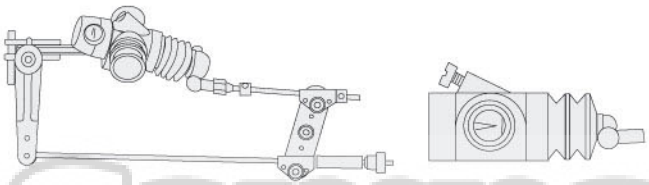

Brake

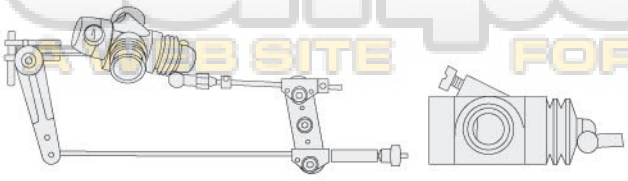

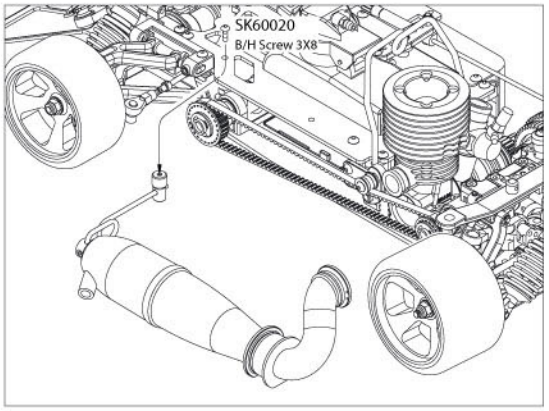

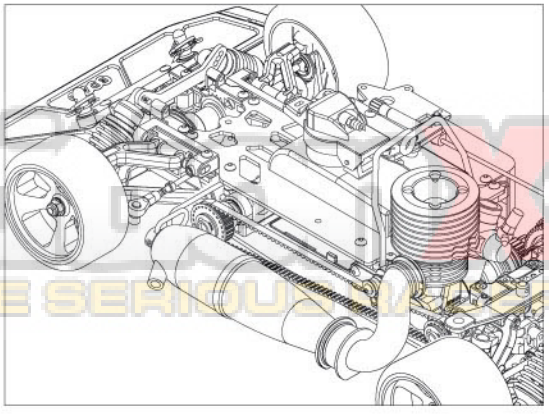

competitive
A WEB SITE FOR THE SERIOUS RACER

Parts Bag 21 |

52 《Fuel Tube》

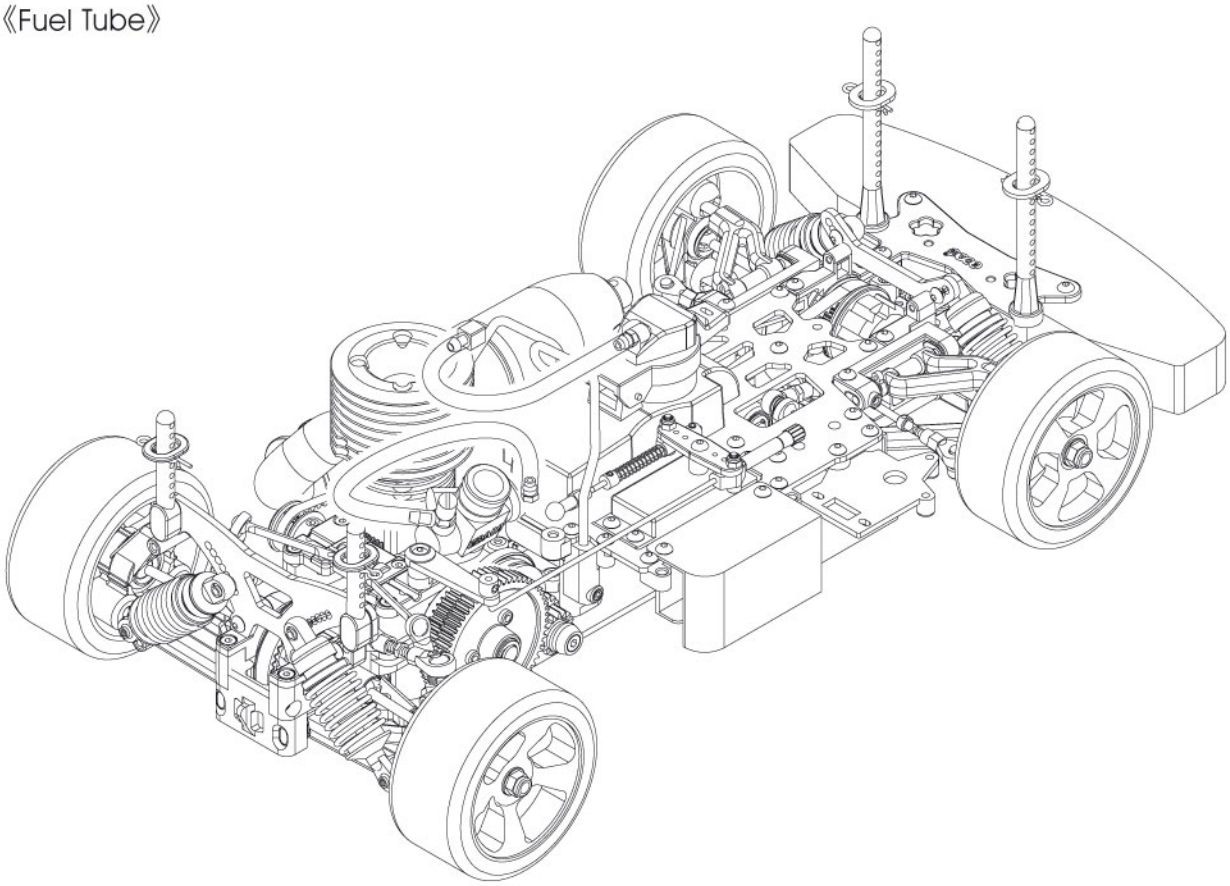

53 《Air Cleaner》

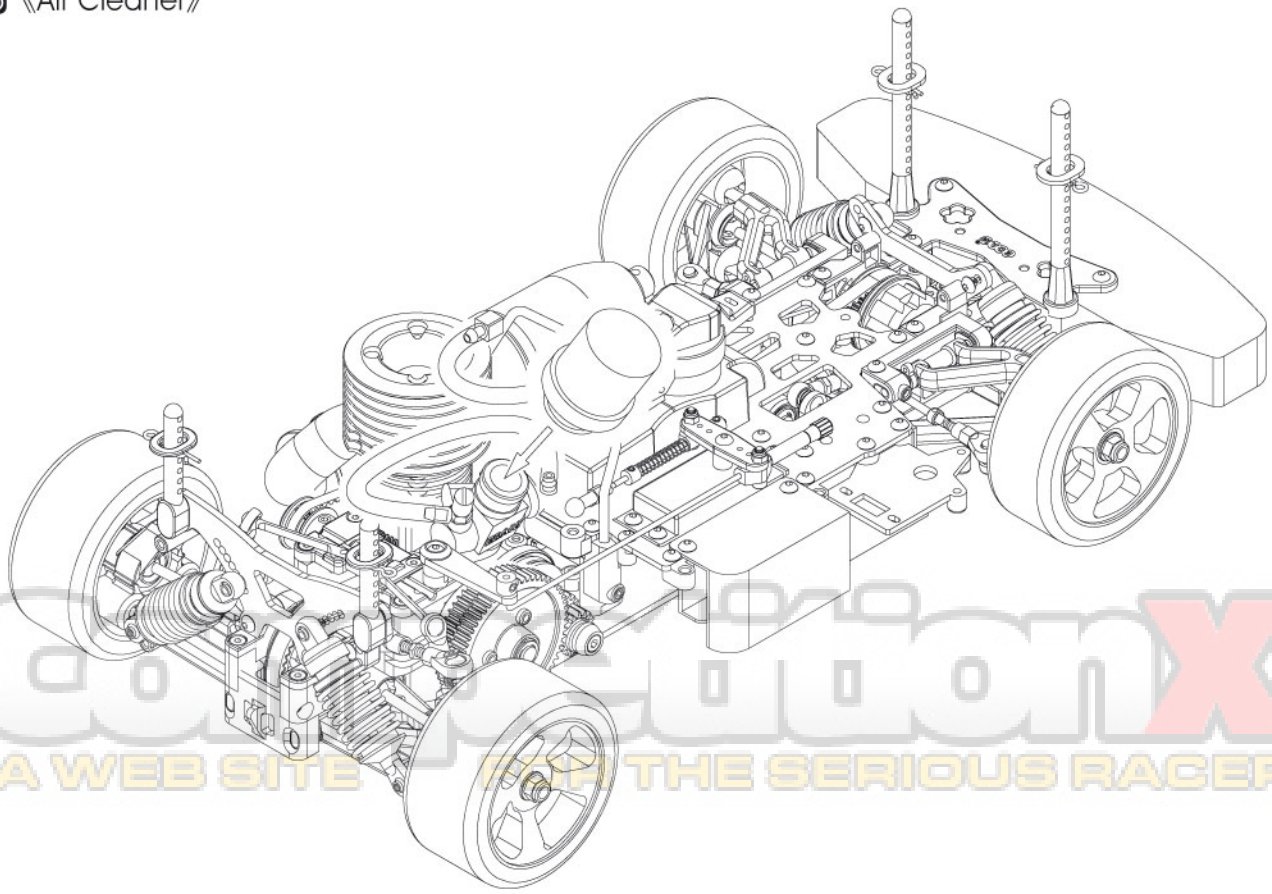

CompetitionX
A WEB SITE FOR THE SERIOUS RACER

54 《Painting Body》

STEP1

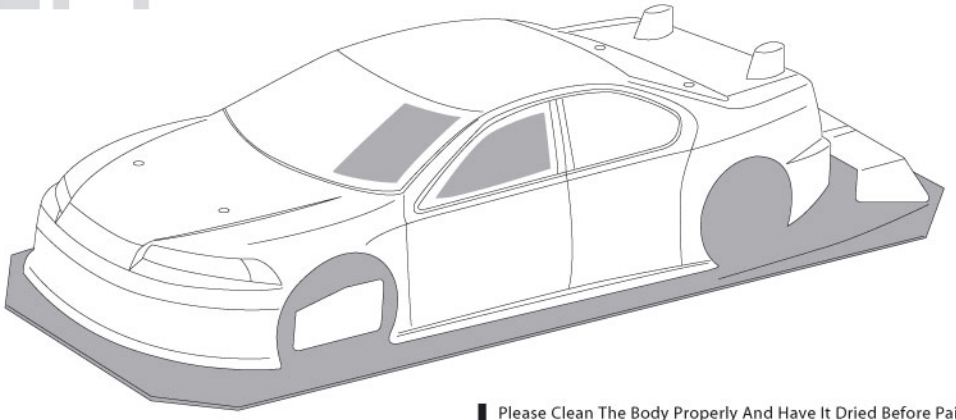

Please Clean The Body Properly And Have It Dried Before Painting. Try To Put The Body On The Car And Cut Holes / Opening Whenever Necessary Before You Proceed To Painting The Body.

STEP2

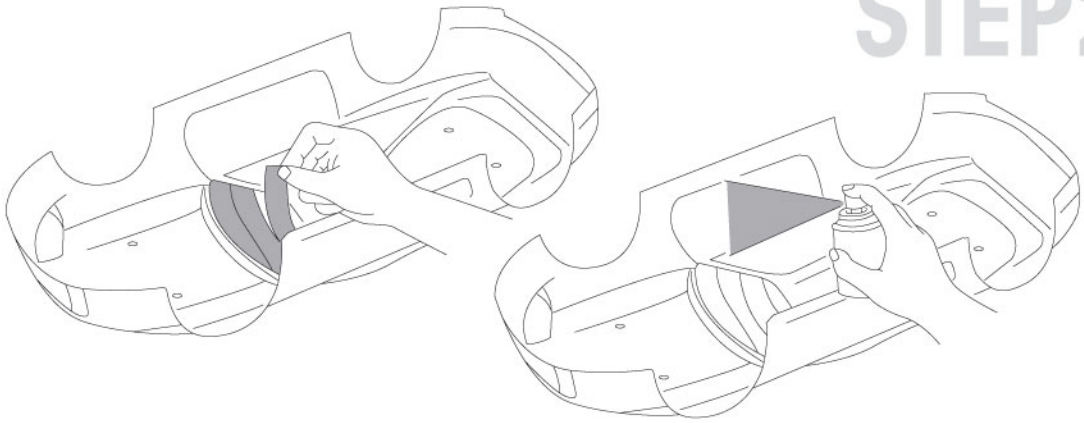

Masking The Spot You Do Not Want The Paint On, Then Use Polycarbonate Paint To Paint The Body According To Your Design. Peel Off Masking And Protective Films After The Painting Is Dried.

STEP3

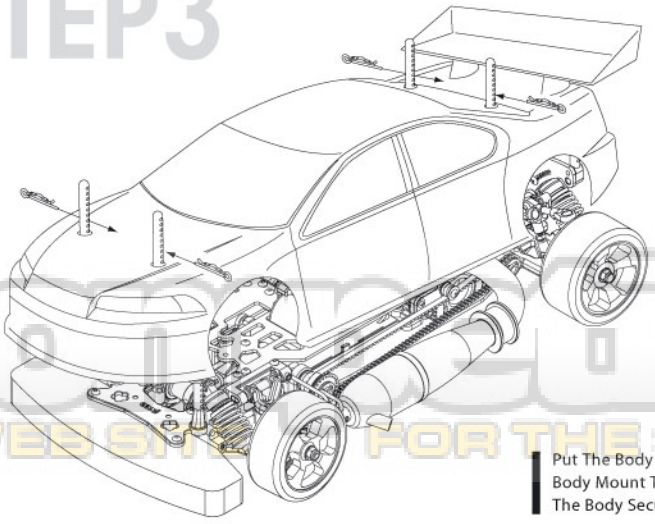

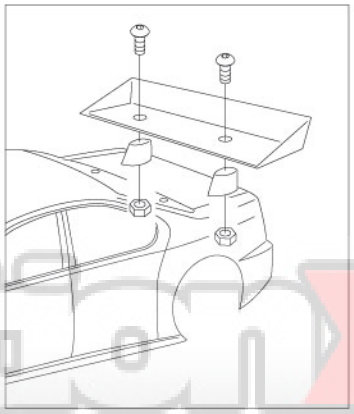

Put The Body On The Car And See If All Positions Fit. Cut Off The Body Mount That Protruded From The Body. Use Body Pin To Clip The Body Securely On The Assembled Car.

Competitionx
A WEB SITE FOR THE SERIOUS RACER

Parts Bag Detail

Parts Bag 01

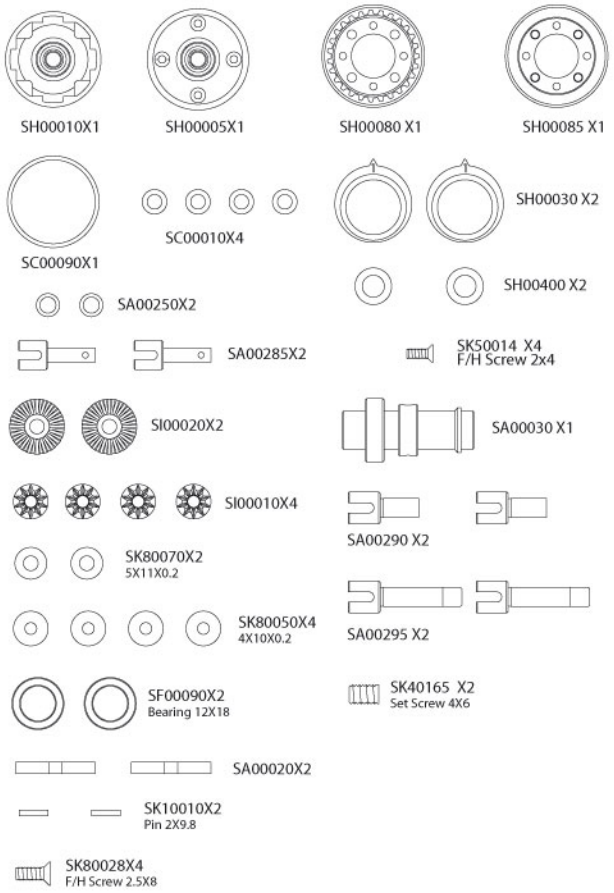

Parts Bag 02

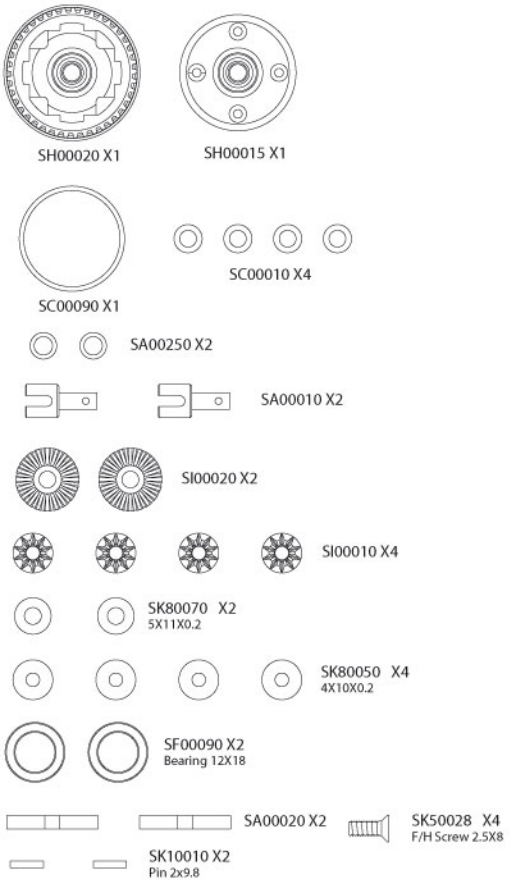

Parts Bag 03

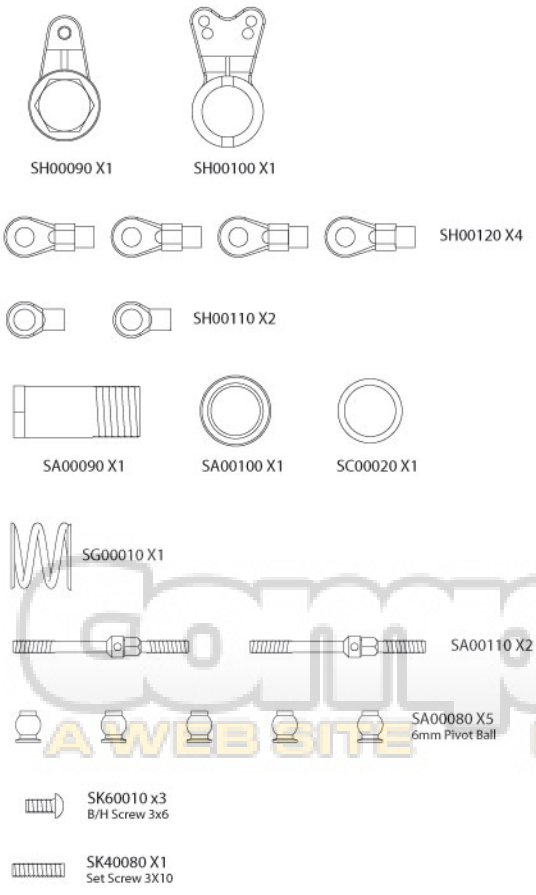

Parts Bag 04

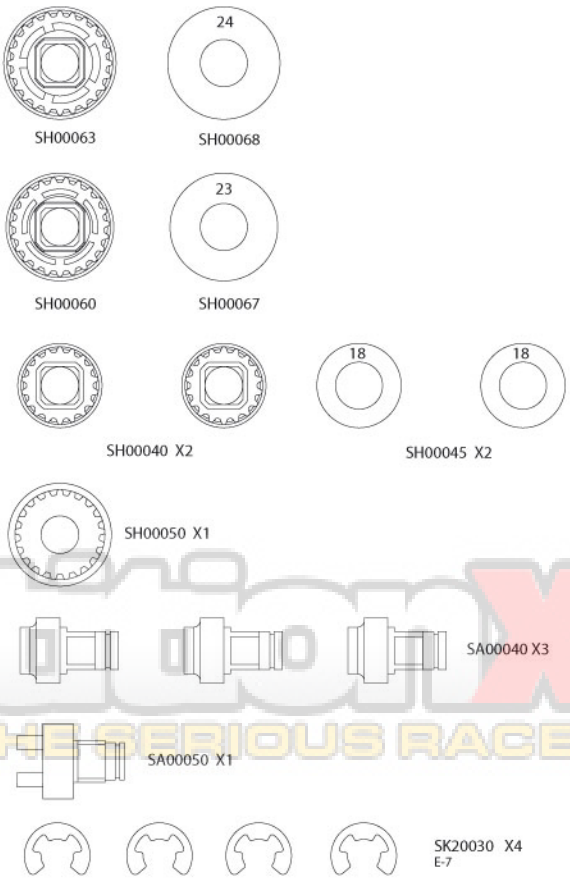

competitionX
A WEB SITE FOR THE SERIOUS RACER

Parts Bag Detail

Parts Bag 05

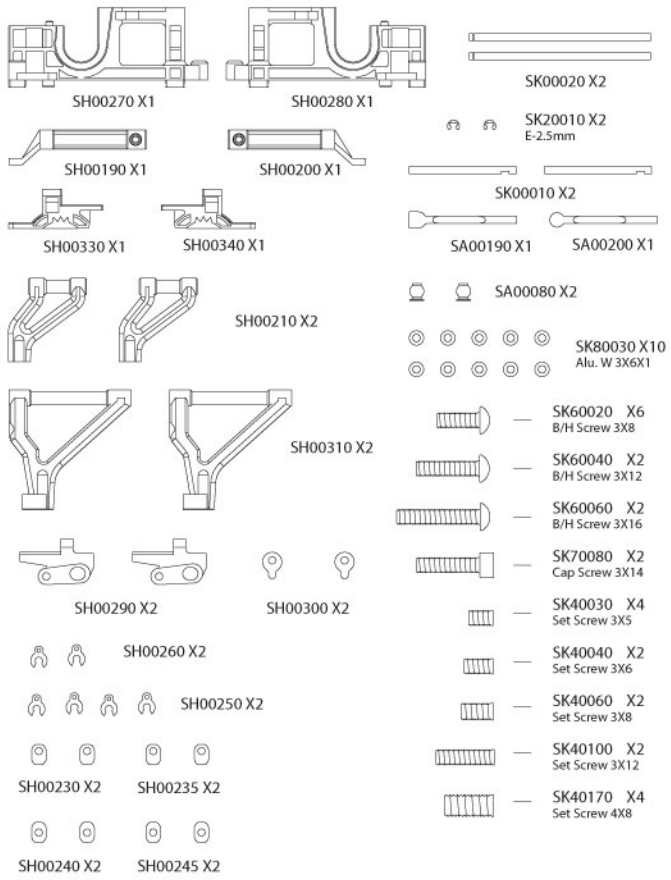

Parts Bag 06

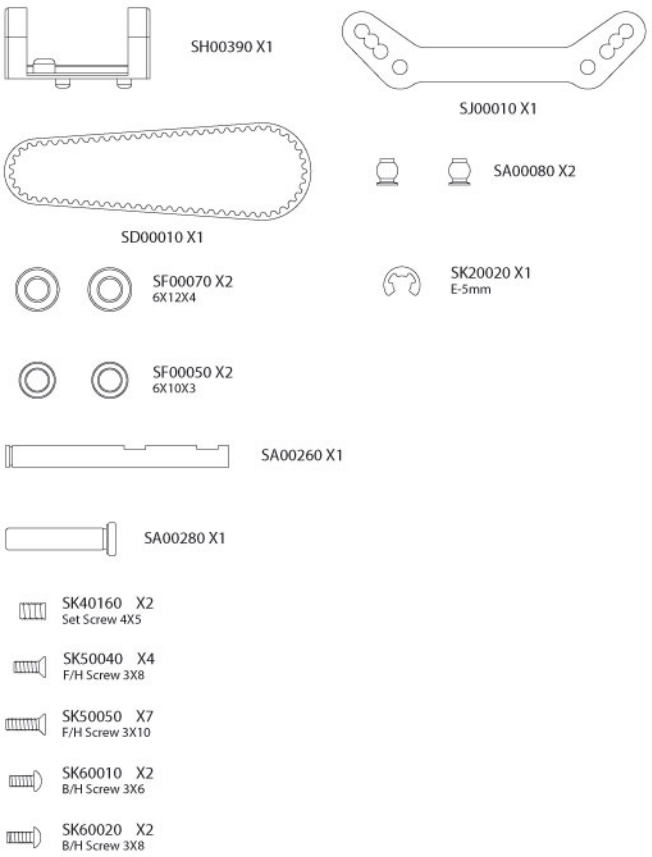

Parts Bag 07

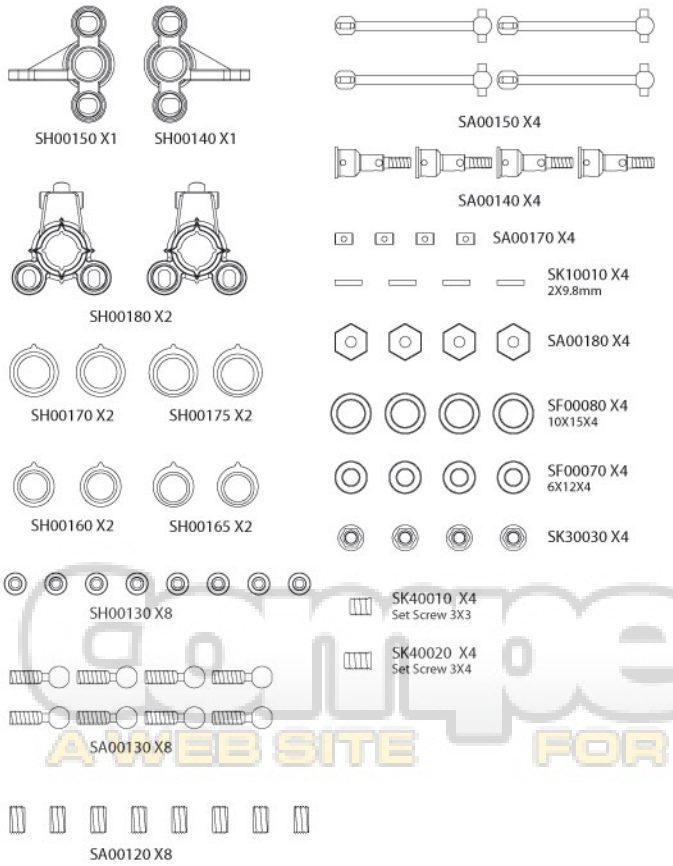

Parts Bag 08

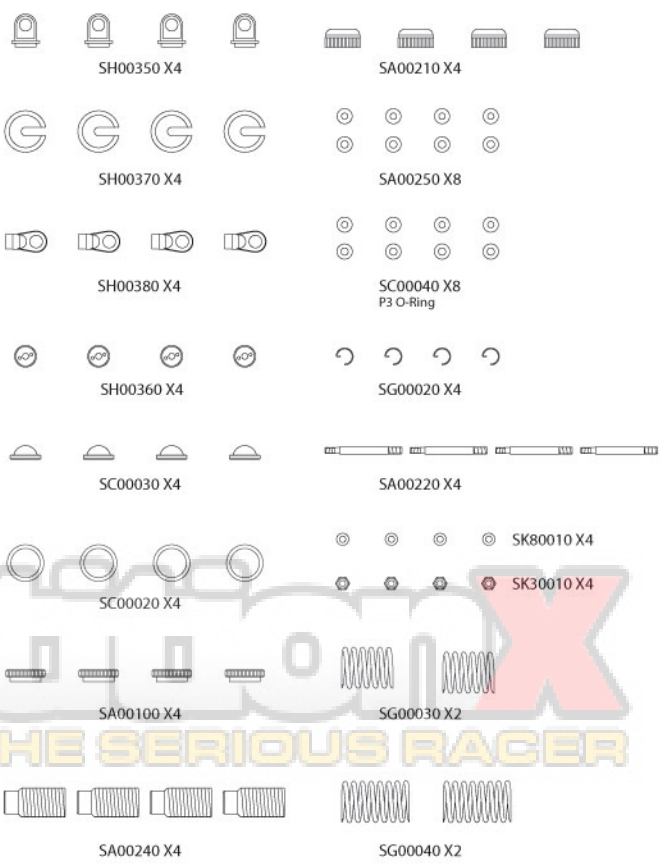

AMEB SITE FOR THE SERIOUS RACER

Parts Bag Detail

Parts Bag 09 / For VDS

SH00420 X1

SH00430 X2

SH00410 X2

SH00440 X2

SK00060 X2

SK30020 X3

SK60020 X6

SK50040 X2

SK50050 X3

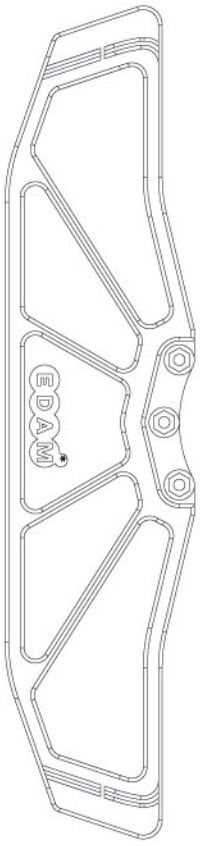

SH00450 X1

Parts Bag 10

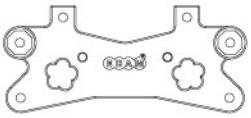

SH00480 X1

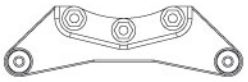
SH00470 X1

SH00460 X2

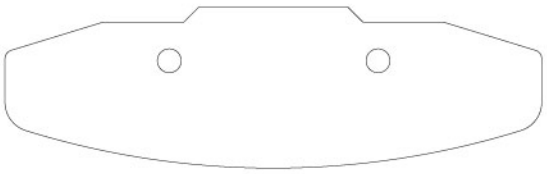
SP00010 X1

SH00440 X2

SK00060 X2

SK30020 X3

SK60020 X6
B/H Screw 3X8

SK50050 X3
F/H Screw 3X10

Parts Bag 11

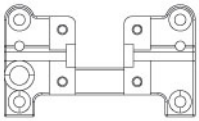
SH00580 X1

SH00570 X1

SH00560 X1

SH00590 X4

SA00350 X1

SF00010 X2
3X6X2.5

SK80020 X2
W 3X4.9X0.5

SA00340 X2

SA00080 X2
6mm

SA00360 X2

SK50025 X4
F/H Screw 2.5X5

SK40010 X4
Set Screw 3X3

SA00640 X2

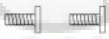
SK90030 X2
P/H Screw 3X8

SK00080 X1
Wire Type Rear Anti-Roll Bar

Parts Bag 12

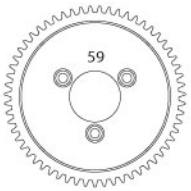

SH00490 X1

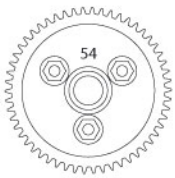

SH00520 X1

SA00300 X1

SA00310 X1

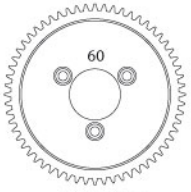

SH00500 X1

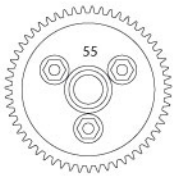

SH00530 X1

SF00040 X2
6X10X3

SK30020 X3
Nut 3mm

Sk50030 X3
F/H Screw 3X6

Sk50040 X3
F/H Screw 3X8

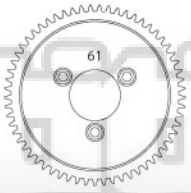

SH00510 X1

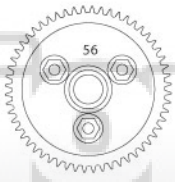

SH00540 X1

competitionX
A WEB SITE FOR THE SERIOUS RACER

Parts Bag Detail

Parts Bag 13

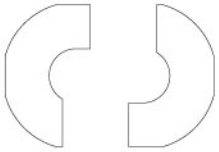
SH00550 X2

SA00320 X1

SK10030 X2
3mm Ball

SG00050 X2

Sk10010 X1
2X9.8mm

Sk20020 X1
E -5mm

SA00330 x1

SK70040
Cap Screw 2.6x10

SK40030 X2
Set Screw 3X5

Parts Bag 14

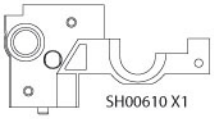
SH00610 X1 SH00600 X1

SH00650 X4 SH00660 X1

SH00640 X1 SH00630 X1 SH00030 X2

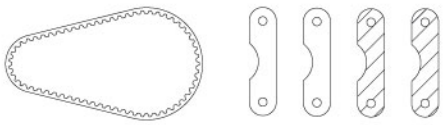
SD00020 X1 SB00020 X2 SB00030 X2

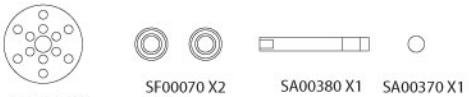
SA00390 X1 SF00070 X2 6X12X4 SA00380 X1 SA00370 X1

SA00410 X4 SA00400 X2

SK40160 X2 Set Screw 4X5
SK60040 X2 B/H Screw 3X12
SK70070 X2 Cap Screw 3X12
SK60010 X1 B/H Screw 3X6
SK50040 X6 F/H Screw 3X8
SK60020 X2 B/H Screw 3X8
SK50050 X6 F/H Screw 3X10

Parts Bag 15

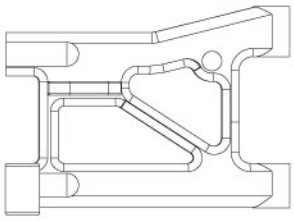
SH00690 X1

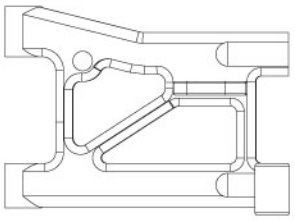
SH00700 X1

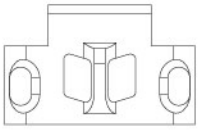
SH00710 X1

SH00670 X4

SH00680 X4

SK80030 X2
Alu. Washer 3X6X1

SK00030 X2

SK40170 X2 Set Screw 4X8
SK50040 X2 F/H Screw 3X8
SK50090 X2 F/H Screw 3X18
SK60010 X2 B/H Screw 3X6
SK50050 X2 F/H Screw 3X10

Parts Bag 16 For VDS

SH00720 X1

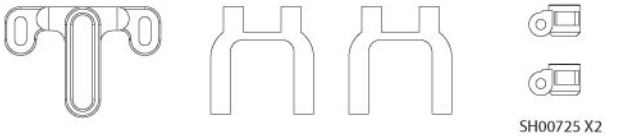
SH00740 X1 SH00730 X2 SH00725 X2

SK00040 X2 SA00470 X2 SK20010 X2 E- 2mm SA00430 X4

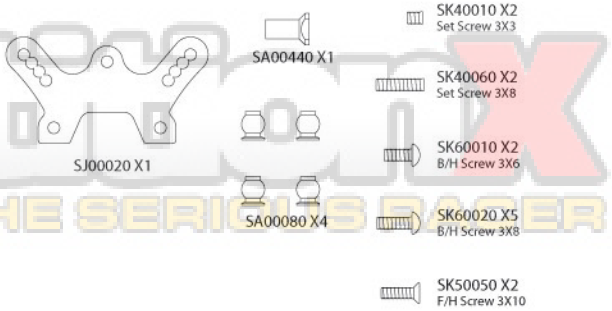
SJ00020 X1
SA00440 X1
SA00080 X4
SK40010 X2 Set Screw 3X3
SK40060 X2 Set Screw 3X8
SK60010 X2 B/H Screw 3X6
SK60020 X5 B/H Screw 3X8
SK50050 X2 F/H Screw 3X10

Competition
AWESOME FOR THE SERIOUS RACER

Parts Bag Detail

Parts Bag 17

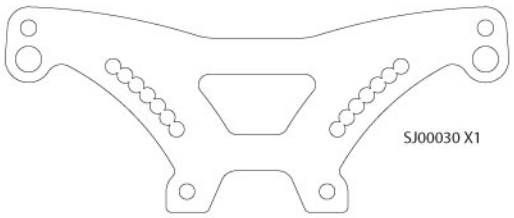
SJ00030 X1

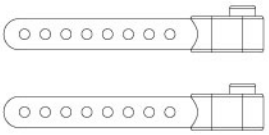
SH00750 X2

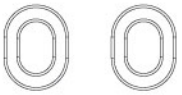
SH00440 X2

SH00060 X2

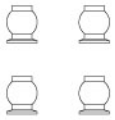
SA00080 X4

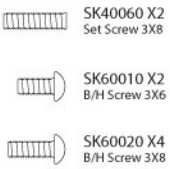
SK40060 X2
Set Screw 3X8

SK60010 X2
B/H Screw 3X6

SK60020 X4
B/H Screw 3X8

Parts Bag 18

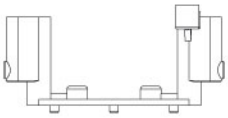
SH00770 X1

SH00760 X1

SF00030 X2
5X8X2.5

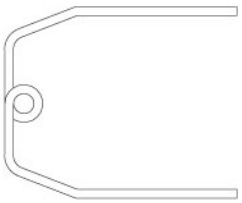
SG00060 X1

SF00020 X1
5X8X2.5

SA00450 X1

SK30020 X1
Nut 3mm

SK40160 X2
Set Screw 4X5

SK60020 X2
B/H Screw 3X8

SK60060 X1
B/H Screw 3X16

SK50040 X4
F/H Screw 3X8

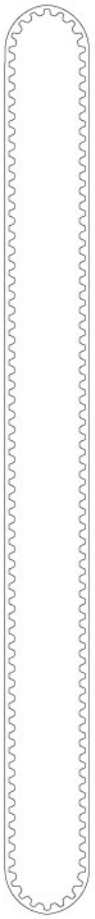
SD00030 X1

Parts Bag 19

SH00800 X1

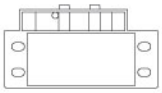
SH00860 X1

SH00830 X1

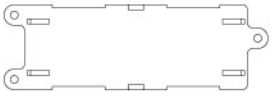
SH00780 X1

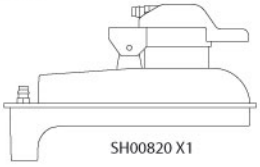
SH00820 X1

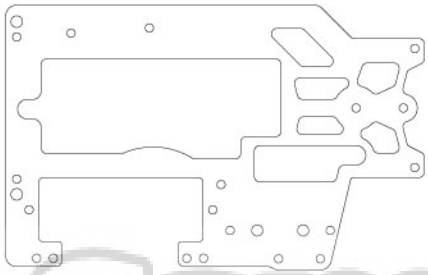
SJ00040 X1

SH00810 X1

SH00790 X2
Servo Tower A

SH00850 X2
Servo Tower B

SA00060 X1

SK80030 X1
3X6X1

SK30020 X2
3mm

SK50040 X3
F/H Screw 3X8

SK60010 X1
B/H Screw 3X6

SK60020 X14
B/H Screw 3X8

SK60040 X4
B/H Screw 3X12

SK60050 X4
B/H Screw 3X14

Parts Bag 20

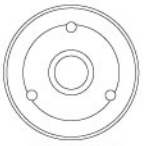
SA00560 X1

SA00570 X1

SC00060 X3

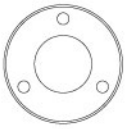
SA00590 X1

SC00070 X1

SA00600 X1

SG00100 X1

SA00610 X1

SF00040X1
5X10X4

SF00020X1
5X8X2.5

SA00620X1

SA00520X1
22T

SA00490X1
17T

SF00030X1

SA00630X1

SK70070X1
Cap Screw 3X12

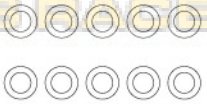
SK80060X10
W 5X8X0.1mm

Competitionx
A WEB SITE FOR THE SERIOUS RACER

Parts Bag Detail

Parts Bag 21

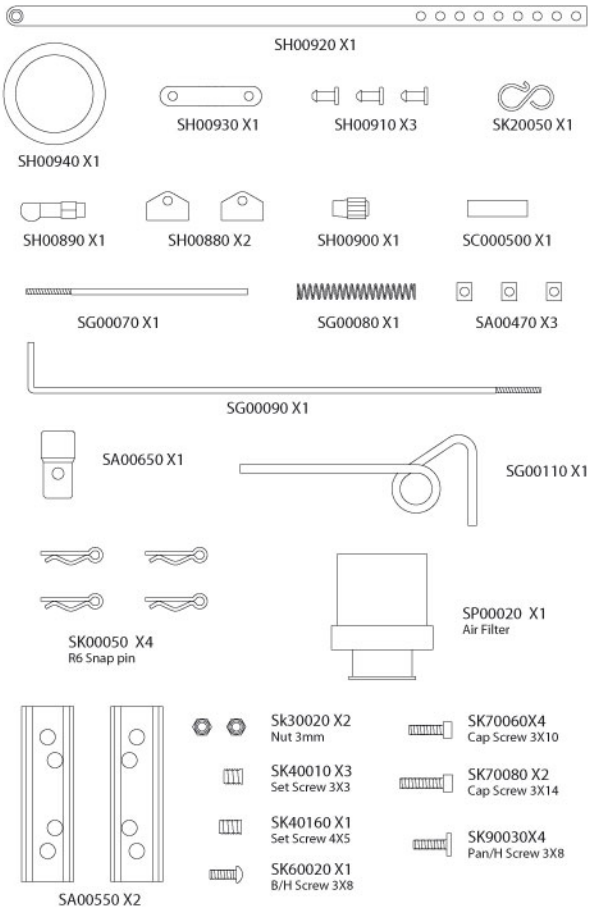

CompetitionX
A WEB SITE FOR THE SERIOUS RACER

Setup Sheet

Track

Date	
Temperature	
Humidity	

Track Condition

Width	☐ Roomy ☐ Mederate ☐ Narrow
Traction	☐ High ☐ Medium ☐ Low
Surface	☐ Smooth ☐ Regular ☐ Bumpy

Front Suspension

Front Width	_____ mm	Anti-Roll Bar	Soft ◉ ⊘ ⊘ ⊘ ◐ Hard
Chassis Height	_____ mm	Toe Angle	☐ In ☐ Out _____ °
Camber Angle	_____ °	Rebound Stop	_____ mm
Upper Suspension Holders	☐ Inside ☐ Middle ☐ Outside	Bump Stop	☐ None ☐ Use
Upper Arm Mount Position	(Add Shim) _____ pcs	Caster Angle	_____ mm

Rear Suspension

Rear Width	_____ mm	Anti-Roll Bar	Wire : Use _____ mm Soft ◉ ⊘ ⊘ ⊘ ◐ Hard
Chassis Height	_____ mm	Upper Arm Position	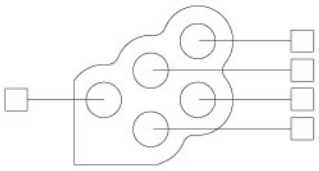
Camber Angle	_____ °		
Toe Angle	☐ In ☐ Out _____ °		
Rebound Stop	_____ mm		
Bump Stop	☐ None ☐ Use _____ mm		
Lower Arm Suspension	☐ Upper ☐ Middle ☐ Lower		

Front Shock

Oil	
Springs	
Shock Position	

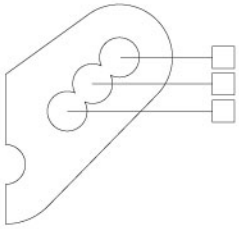

Rear Shock

Oil	
Springs	
Shock Position	

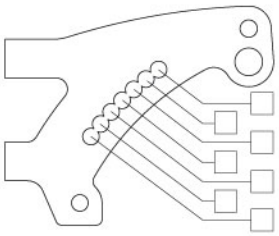

Engine

Type		Muffler	
Gasket		Manifold	
Plug		Fuel	

Clutch

Clutch Shoe		Spring Adjustable Nut Position	_____ mm
Centrifugal Shoe		Clutch Bell Clearance	_____ mm
Spring			

Tire

Front		Rear	
Type		Type	
Diameter		Diameter	
Hardness		Hardness	

Body

Type	
Thickness	
Length	
Width	

Drive Ratio

Pinion Gear	1st: 16. 17. 18 2nd: 21. 22. 23
Spur Gear	1st: 59. 60. 61 2nd: 54. 55. 56
Side Pulley	☐ 23T ☐ 24T

A WEB SITE FOR THE SERIOUS RACER

Setup Sheet

Spirit 1/10 SCALE ON ROAD CAR

Track

Date	
Temperature	
Humidity	

Track Condition

Width	☐ Roomy ☐ Mederate ☐ Narrow
Traction	☐ High ☐ Medium ☐ Low
Surface	☐ Smooth ☐ Regular ☐ Bumpy

Front Suspension

Front Width	_____ mm	Anti-Roll Bar	Soft ◉ ⊘ ⊘ ⊘ ◐ Hard
Chassis Height	_____ mm	Toe Angle	☐ In ☐ Out _____ °
Camber Angle	_____ °	Rebound Stop	_____ mm
Upper Suspension Holders	☐ Inside ☐ Middle ☐ Outside	Bump Stop	☐ None ☐ Use
Upper Arm Mount Position	(Add Shim) _____ pcs	Caster Angle	_____ mm

Rear Suspension

Rear Width	_____ mm	Anti-Roll Bar	Wire : Use _____ mm Soft ◉ ⊘ ⊘ ⊘ ◐ Hard
Chassis Height	_____ mm	Upper Arm Position	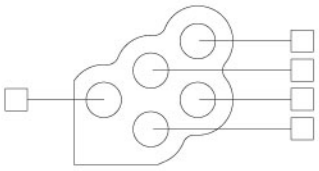
Camber Angle	_____ °		
Toe Angle	☐ In ☐ Out _____ °		
Rebound Stop	_____ mm		
Bump Stop	☐ None ☐ Use _____ mm		
Lower Arm Suspension	☐ Upper ☐ Middle ☐ Lower		

Front Shock

Oil	
Springs	
Shock Position	

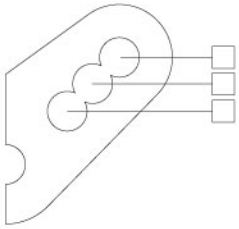

Rear Shock

Oil	
Springs	
Shock Position	

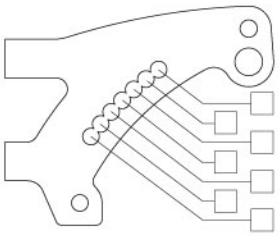

Engine

Type		Muffler	
Gasket		Manifold	
Plug		Fuel	

Clutch

Clutch Shoe		Spring Adjustable Nut Position	_____ mm
Centrifugal Shoe		Clutch Bell Clearance	_____ mm
Spring			

Tire

Front		Rear	
Type		Type	
Diameter		Diameter	
Hardness		Hardness	

A WEB SITE FOR THE SERIOUS RACER

Body

Type	
Thickness	
Length	
Width	

Drive Ratio

Pinion Gear	1st: 16. 17. 18 2nd: 21. 22. 23
Spur Gear	1st: 59. 60. 61 2nd: 54. 55. 56
Side Pulley	☐ 23T ☐ 24T

Item	Part No.	Description
01	SA00010	Differential Joint Cup
02	SA00020	Differential Shaft
03	SA00030	Front Oneway Axle
04	SA00035	Front Solid Axle
05	SA00040	(18T.23T.24T) Pulley Hub
06	SA00050	21T Brake Pulley Hub
07	SA00060	6mm Servo Steering Pivot Ball
08	SA00070	Left Extended Axle (RTR)
09	SA00080	6mm Pivot Ball
10	SA00090	Servo Saver Pipe
11	SA00100	Servo Saver Spring Retainer
12	SA00110	Steering Rod
13	SA00120	Pillow Ball Alu. Screw Cap
14	SA00130	Pillow Ball
15	SA00140	F/R Axle Shaft for CVD
16	SA00150	Front/Rear Drive Shaft for CVD
17	SA00170	Joint Shaft for CVD
18	SA00180	Alu. Wheel Hub
19	SA00190	Front Anti - Roll Bar - L
20	SA00200	Front Anti - Roll Bar - R
21	SA00210	Damper Alu. Caps
22	SA00220	Damper Shaft
23	SA00240	Damper Case
24	SA00250	Damper Black Shim
25	SA00260	Middle Shaft
26	SA00265	Middle Shaft (RTR)
27	SA00270	Chassis 7075 T6 3mm
28	SA00275	Chassis 6061 T6 3mm
29	SA00280	Servo Saver Post
30	SA00285	Front Differential Gear Joint Cup
31	SA00290	Front One-Way Joint Cup
32	SA00295	Front Straight Axle Joint Cup
33	SA00300	1st. Gear Housing With One-Way Bearing
34	SA00310	2nd. Gear Housing
35	SA00320	2 Speed Adapter
36	SA00330	Raer LayShaft
37	SA00335	Raer LayShaft (RTR)

Item	Part No.	Description
38	SA00340	Rear Anti- Roll Bar
39	SA00350	Rear Anti- Roll Bar Mount
40	SA00360	Turn Buckle Rod 3X15mm
41	SA00370	Alu. Pin 6X4.5mm
42	SA00380	Brake Actuator
43	SA00390	Ventilated Brake Disk
44	SA00400	Rear Upper Arm Turn Buckle Rod 4X22mm
45	SA00410	7mm W/O Threaded Inside Ball
46	SA00420	7mm Threaded Inside Ball
47	SA00430	Body Mount Alu. Cap
48	SA00440	Body Mount Slide Brace
49	SA00450	Belt Tensioner
50	SA00460	Body Mount Slide Brace Shim 3X8X2
51	SA00470	Chock-A-Block
52	SA00480	16T Pinion (op)
53	SA00490	17T Pinion (st)
54	SA00500	18T Pinion (op)
55	SA00510	21T Pinion (op)
56	SA00520	22T Pinion (st)
57	SA00530	23T Pinion (op)
58	SA00540	24T Pinion (op)
59	SA00550	Alu. Engine Mount
60	SA00555	Alu. Engine Mount (RTR)
61	SA00560	Flywheel
62	SA00565	Flywheel (RTR)
63	SA00570	Clutch Nut
64	SA00575	Clutch Nut (RTR)
65	SA00580	Tapered Collet
66	SA00590	3D Clutch Plate
67	SA00600	3D Clutch Spring Catch
68	SA00610	Clutch Spring Adjust Nut
69	SA00620	Clutch Bell
70	SA00625	Clutch Bell (RTR)
71	SA00630	Thrust Bearing Carrier
72	SA00640	Rear Anti-Roll Bar Pivot Ball
73	SA00650	Aluminum Pipe Mount
74	SA00660	Fuel Tank Cap Pin

A WEB SITE FOR THE SERIOUS RACER

Item	Part No.	Description
75	SB00010	Alu. Front Damper Tower
76	SB00020	Brake Calipers
77	SB00030	Brake Pads
78	SB00040	Alu. Rear Damper Tower for Touring Car
79	SB00050	Alu. Radio Tray
80	SC00010	O-Ring P5
81	SC00020	O-Ring S12.5
82	SC00030	Damper Diaphragm
83	SC00040	O-Ring P3
84	SC00050	Silicon Tube
85	SC00060	3D Weight
86	SC00070	3 Hole Clutch Shoe
87	SC00080	1/10 Air Filter
88	SC00090	Back-Up Ring
89	SC00100	Antenna Tube
90	SC00110	Fuel Tank O-Ring 17.8 * 2.5mm
91	SC00120	3D Clutch Shoe (RTR)
92	SD00010	Bando Belt - Front
93	SD00020	Bando Belt-Rear
94	SD00030	Bando Belt-Left Side
95	SF00010	Bearing 3X6X2.5
96	SF00020	Bearing 5X8X2.5
97	SF00025	Oil Bush 5X8X2.5
98	SF00030	Flanged Bearing 5X8X2.5
99	SF00035	Thrust Bearing 5X10X4
100	SF00040	Bearing 5X10X4
101	SF00050	Bearing 6X10X3
102	SF00060	One-Way Bearing 6X10X12
103	SF00070	Bearing 6X12X4
104	SF00080	Bearing 10X15X4
105	SF00090	Bearing 12x18x4
106	SG00010	Servo Saver Spring
107	SG00020	Damper G Type Spring
108	SG00030	Front Damper Spring 1.7mm (S)
109	SG00040	Rear Damper Spring 1.7mm (L)
110	SG00050	2 Speed Shoe Spring
111	SG00060	Roll Bar

Item	Part No.	Description
112	SG00070	Throttle Lever
113	SG00080	Throttle Spring
114	SG00090	Brake Lever
115	SG00100	Clutch Spring 1.9X1.5
116	SG00105	3D Clutch Shoe Spring (RTR)
117	SG00110	Pipe Spring Wire
118	SG00120	Fuel Tank Cap Spring
119	SG00130	Filter M4 * P0.7
120	SG00140	Egine Spring
121	SH00005	Composite Front DIFF. Case & Upper Cover
122	SH00010	Composite Front DIFF. Case & Lower Cover
123	SH00015	Composite Rear DIFF. Case & Upper Cover
124	SH00020	Composite Rear DIFF. Case & Lower Cover
125	SH00030	Front Oneway Axle No.1 Eccentric Hub
126	SH00040	18T Pulley
127	SH00045	18T Pulley Side
128	SH00050	21T Pulley
129	SH00060	23T Pulley
130	SH00063	24T Pulley
131	SH00067	23T Pulley Side
132	SH00068	24T Pulley Side
133	SH00080	27T Pulley
134	SH00085	27T Pulley Side
135	SH00090	Servo Saver Arm - A
136	SH00100	Servo Saver Arm - B
137	SH00110	6mm Servo Steering Ball Ends (A)
138	SH00120	6mm Ball Ends
139	SH00130	Pillow Ball Plastic Cup
140	SH00140	Front Hub - L
141	SH00150	Front Hub - R
142	SH00160	Bearing No.4 Eccentric Hub
143	SH00165	Bearing No.5 Eccentric Hub
144	SH00170	Bearing No.2 Eccentric Hub
145	SH00175	Bearing No.3 Eccentric Hub
146	SH00180	Rear Hub
147	SH00190	Front Upper Arm Mount - L
148	SH00200	Front Upper Arm Mount - R

A WEB SITE FOR THE SERIOUS RACER

Item	Part No.	Description
149	SH00210	Front Upper Arm
150	SH00230	Front Upper Suspension Holders - A(Left/Right, F)
151	SH00235	Front Upper Suspension Holders - C(Left/Right, R)
152	SH00240	Front Upper Suspension Holders - B(Middle, F)
153	SH00245	Front Upper Suspension Holders - D(Middle, R)
154	SH00250	1mm Caster Clips Shim
155	SH00260	2mm Caster Clips Shim
156	SH00270	Front Bulk Head - L
157	SH00280	Front Bulk Head - R
158	SH00290	Front Anti - Roll Bar Holder
159	SH00300	Front Anti - Roll Bar Adjustable Arm
160	SH00310	Front Lower Arm
161	SH00330	Front Bulk Head Brace - L
162	SH00340	Front Bulk Head Brace - R
163	SH00350	Damper Upper Ball Ends
164	SH00360	Damper Piston 2 Hole
165	SH00370	Damper Spring Hold
166	SH00380	Damper Lower Ball Ends
167	SH00390	Middle Shaft Bracket
168	SH00400	Front One-Way Joint Cup -Shim 2mm
169	SH00410	Front Body Mount Bracket for VDS
170	SH00420	Front Body Mount for VDS
171	SH00430	Front Body Brace for VDS
172	SH00440	Body Brace Seesaw
173	SH00450	200/220mm Bumper for VDS
174	SH00460	Front Body Brace for Touring Car
175	SH00470	Support Bumper for Touring Car
176	SH00480	Body Mount for Touring Car
177	SH00490	2-Speed Gear 59T 1st. (op)
178	SH00500	2-Speed Gear 60T 1st. (st)
179	SH00510	2-Speed Gear 61T 1st. (op)
180	SH00520	2-Speed Gear 54T 2nd. (op)
181	SH00530	2-Speed Gear 55T 2nd. (st)
182	SH00540	2-Speed Gear 56T 2nd. (op)
183	SH00550	2 Speed Gear Box Shoe
184	SH00560	Rear Anti-Roll Bar Bearing Cap - L
185	SH00570	Rear Anti-Roll Bar Bearing Cap - R

Item	Part No.	Description
186	SH00580	Brake Bracket
187	SH00590	6mm Rear Anti-Roll Bar Ball Ends (B)
188	SH00600	Rear Bulkhead - L
189	SH00610	Rear Bulkhead - R
190	SH00630	Rear Bulkhead Bracket - L
191	SH00640	Rear Bulkhead Bracket - R
192	SH00650	Rear Upper Arm Ball Ends (C)
193	SH00660	Brake Arm
194	SH00670	Rear Lower Suspension Holders (Upper/Lower Opening)
195	SH00680	Rear Lower Suspension Holders (Middle Opening)
196	SH00690	Rear Lower Arm - L
197	SH00700	Rear Lower Arm - R
198	SH00710	Rear Bulkhead Cap
199	SH00720	Rear Body Mount for VDS
200	SH00725	Rear Body Mount Brace for VDS
201	SH00730	Rear Body Mount Support for VDS
202	SH00740	Rear Body Mount Centering Plate for VDS
203	SH00750	Rear Body Brace for Touring Car
204	SH00760	Left Side Brace
205	SH00770	Radio Tray Mount
206	SH00780	Battery Tray
207	SH00790	Servo Tower - A
208	SH00800	Open Receiver Case
209	SH00810	Switch Mount
210	SH00820	Fuel Tank
211	SH00830	Open Receiver Case Cap
212	SH00840	Servo Home - K (L)
213	SH00850	Servo Tower - B
214	SH00860	Steering Servo Mount
215	SH00870	Servo Horn - K (S)
216	SH00880	Throttle Lever Slide Cap
217	SH00890	Throttle Balls Cap
218	SH00900	Brake Lever Nuts
219	SH00910	Ring Pin
220	SH00920	Pulling Strip
221	SH00930	Ring Buckle
222	SH00940	Pulling Ring

A WEBSITE FOR THE SERIOUS RACER

Item	Part No.	Description
223	SH00950	Fuel Tank Cap
224	SH00960	Fuel Tank Cap underlay
225	SH00970	Belt Mount Plate Brace
226	SI00010	10T Differential Gear
227	SI00020	20T Differential Gear
228	SJ00010	Carbon Front Damper Tower
229	SJ00020	Carbon Rear Damper Tower for VDS
230	SJ00030	Carbon Rear Damper Tower for Touring Car
231	SJ00040	Carbon Radio Tray
232	SK00010	Front Upper Suspension Shaft
233	SK00020	Front Lower Suspension Shaft
234	SK00030	Rear Lower Suspension Shaft
235	SK00040	Rear Body Mount Hardware
236	SK00050	R6 Snap pin
237	SK00060	Body Brace Snap Pin
238	SK00080	2.5mm Wire type Rear Anti-Roll Bar
239	SK10010	Pin 2 x 9.8mm
240	SK10020	Pin 2.5X12.8
241	SK10025	Pin 2.5X14.8
242	SK10030	3mm Ball
243	SK10040	Pin 3X11.6
244	SK10060	Pin 3X18.8mm
245	SK20010	E-Ring 2.5mm
246	SK20020	E-Ring 5mm
247	SK20030	E-Ring 7mm
248	SK20040	E-Ring 8mm
249	SK20050	S-Ring
250	SK30010	Nylon Nut 2.5mm
251	SK30020	Nylon Nut 3mm
252	SK30030	M4 Flanged Nylon Nut 5.7mm(st)
253	SK30035	M4 Flanged Nylon Nut 4.5mm(op)
254	SK40010	Set Screw 3X3
255	SK40020	Set Screw 3X4
256	SK40030	Set Screw 3X5
257	SK40040	Set Screw 3X6
258	SK40060	Set Screw 3X8
259	SK40080	Set Screw 3X10

Item	Part No.	Description
260	SK40100	Set Screw 3X12
261	SK40160	Set Screw 4X5
262	SK40165	Set Screw 4X6
263	SK40170	Set Screw 4X8
264	SK40200	Set Screw 5X5
265	SK50014	F/H (Flat Head) Screw 2X4
266	SK50025	F/H Screw 2.5X5
267	SK50028	F/H Screw 2.5x5
268	SK50030	F/H Screw 3X6
269	SK50040	F/H Screw 3X8
270	SK50050	F/H Screw 3X10
271	SK50090	F/H Screw 3X18
272	SK60010	B/H (Button Head) Screw 3X6
273	SK60020	B/H Screw 3X8
274	SK60030	B/H Screw 3X10
275	SK60040	B/H Screw 3X12
276	SK60050	B/H Screw 3X14
277	SK60060	B/H Screw 3X16
278	SK60070	B/H Screw 3X18
279	SK70040	Cap Screw 2.6X10
280	SK70070	Cap Screw 3X12
281	SK70080	Cap Screw 3X14
282	SK80010	Washer 2.6X5X0.5
283	SK80020	Washer 3X4.9X0.5
284	SK80030	Alu. Washer 3X6X1
285	SK80040	Washer 3X7X0.5
286	SK80050	Washer 4X10X0.2
287	SK80060	Washer 5x8x0.1
288	SK80070	Washer 5x11x0.2
289	SK90030	Pan Head Screw 3X8
290	SL10010	1/10 Semi - Clear Shell
291	SL10020	1/10 Fully Transparent Shell
292	SL10030	1/10 Multi - Color Shell
293	SL20010	1/10 Clear VDS Shell
294	SL20020	1/10 Multi - Color VDS Shell
295	SP00010	Foam Bumper
296	ST09800	1/10 Spirit 980 Standard Kit

A WEB SITE FOR THE SERIOUS RACER

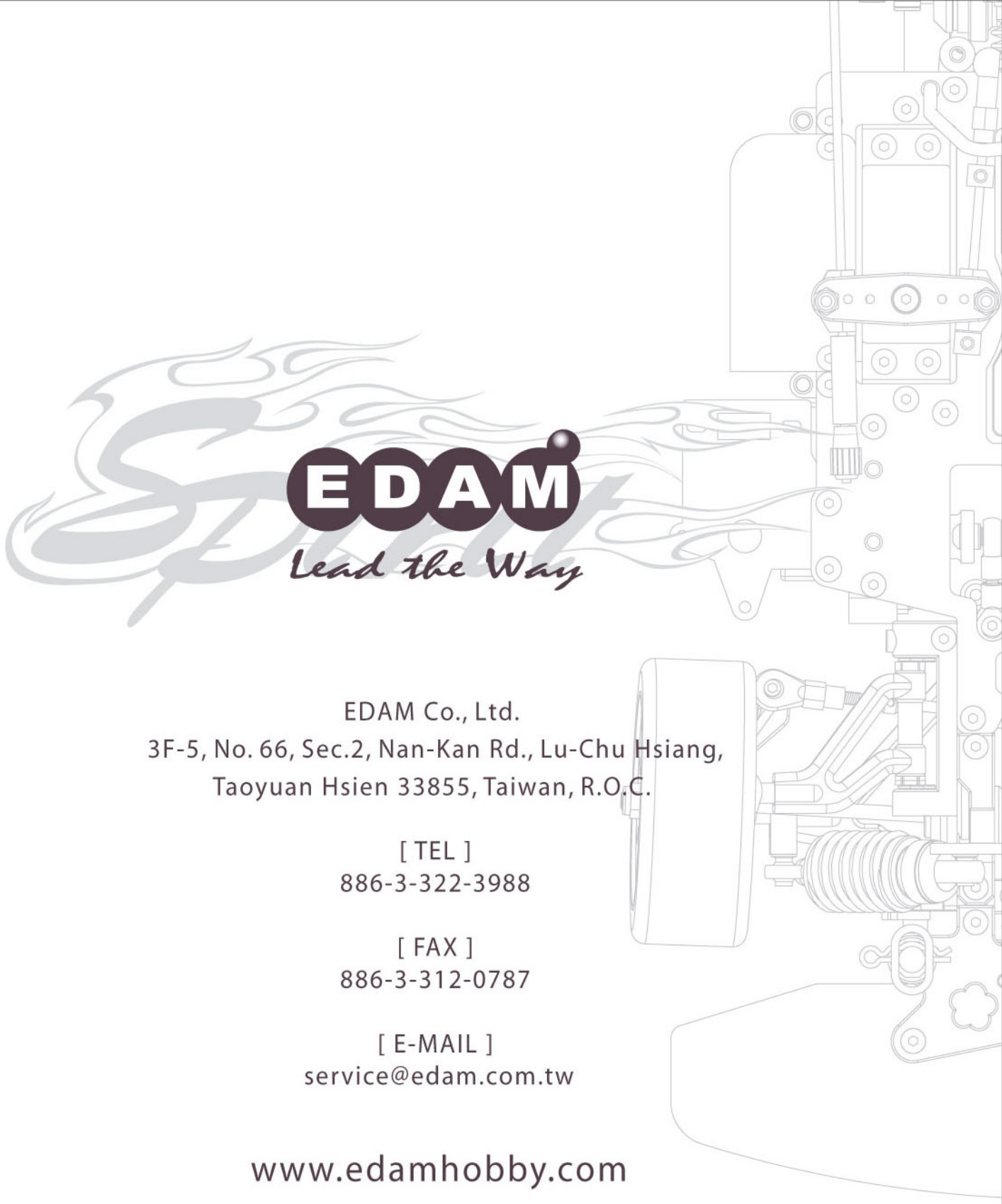

EDAM

Lead the Way

EDAM Co., Ltd.
3F-5, No. 66, Sec.2, Nan-Kan Rd., Lu-Chu Hsiang,
Taoyuan Hsien 33855, Taiwan, R.O.C.

[TEL]
886-3-322-3988

[FAX]
886-3-312-0787

[E-MAIL]
service@edam.com.tw

www.edamhobby.com

A WEB SITE FOR THE SERIOUS RACER