Please keep this OPERATING INSTRUCTION MANUAL for reference

NRB-3 PRO

INSTRUCTION MANUAL

Nanda Racing

Zhenglong 2nd RD.Zengtian Industrial District Jiekou Chang'an Town. Dongguan City. Guangdong, China,
Http: //www.nandaracing.com
Tel: +86(769)85350570
+86(769)85387453
Fax: +(769)85376452
E-mail: info@nandaracing.com

BETTER CHOICE

- Monopoly of innovative C block for quick caster angle adjustment. Adjustable angles from 17 – 23 degrees.
- Monopoly of innovative high performance CVD, featuring lightweight, dust proof and more efficient transmission.
- Front / Rear shock towers are made with high quality, CNC made 5mm 7075 T6 aluminum.
- Graphite stiffener braces are used in all upper deck, which includes front, center and radio plate.
- Quick remove / install center differential block, change your center differential in less than 5min...
- Maximum suspension arm travel design for better handling on rough surface.
- Closed and Dust / Fuel proof radio box design.
- Centralize engine position, 50:50 front and rear weight balance makes NRB-3 drives like a dream.
- 15mm diameter shock body provides maximum traction right out of the box.
- Built-in Innovative Servo Power Saving Concept.

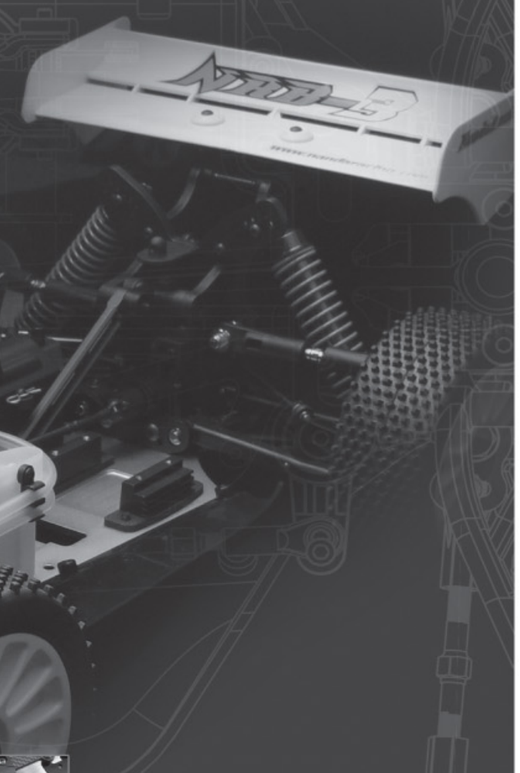

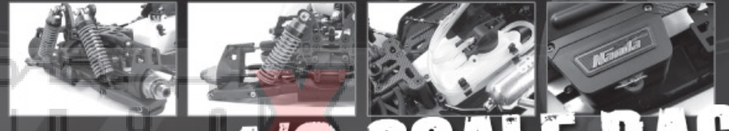

1/8 SCALE RACING BUGGY

Competition
A WEB SITE FOR THE SERIOUS RACER

www.nandaracing.com

Please read these instructions thoroughly before assembling

DEAR CUSTOMERS

Thanks for choosing Nanda products. Included in the kit is a high performance 1/8 scale radio control vehicle.Due to the massive power and high speed, please be careful when operating this vehicle. Read the instructions carefully before installation and operating.

Chassis Dimension:	
Track width:	308 mm
Wheelbase:	325 ± 2 mm
Length:	490 mm
Height:	175 mm
Full Weight:	3450 g

Chassis:	
Radio Plate:	Carbon Graphite
Front Upper Deck:	Carbon Graphite
Center Diff Upper Deck:	Carbon Graphite
Center Braces:	High quality CNC machined aluminum braces

Suspension:	
Front Suspension:	C hub suspension with monopoly of innovative caster block.
Front Sway Bar:	Included.
Rear Suspension:	Lower H arm with adjustable upper camber link.
Rear Sway Bar:	Included.
Shock Towers (F/R):	High quality 7075 T6/5mm CNC machined aluminum.
Damping:	CNC machined 15mm bore shock body, oil filled with 3.5mm shaft, dust proof rubber shaft covers.

Drivetrain:	
Drive shafts:	Monopoly of innovative CVD.
Bearings:	Rubber sealed bearings
Differentials:	6 gears, silicone-filled
Clutch:	3 Shoes

Gearing:	
Spur / Pinion:	46 / 13

Accessories and Others:	
Bodyshell:	Nanda NRB-3 Unpainted Bodyshell
Tires and Wheels:	Nanda Racing Tires

Improvements:	
	Monopoly of Innovative Caster Block
	Monopoly of Innovative CVD.
	Efficient Transmission (lightweight drive shafts)
	Built-in Innovative Servo Power Saving Concept
	Centralize Weight Balance.
	Low Center of Gravity Design Top to Bottom.

Adjustment Availability:	
Camber:	Fully Adjustable
Caster:	17 ~ 23
Front Toe-in:	Fully Adjustable
Rear Toe-in:	2, 2.5, 3, 3.5
Wheelbase:	323 – 327mm
Front Kick-up:	Adjustable
Rear Anti-Squat:	Adjustable
Front Roll Center:	Adjustable
Rear Roll Center:	Adjustable

Contents

Preface 0
Included items 1
Important-read this 2
Items in the box 4
Items require to run 4
Tools required for maintenance 5
Your 2 channel radio system 5
STEP 1 Plug in receiver batteries 6
STEP 2 Check. check 1...2...3... 6
STEP 3 Final preparations... 7
STEP 4 Showtime...almost! 7
STEP 5 Care and feeding 8
STEP 6 Trouble shooting 9
Assembly instructions 10
Kit bag details 33
Setup sheet 39
Exploded View 42

Included items

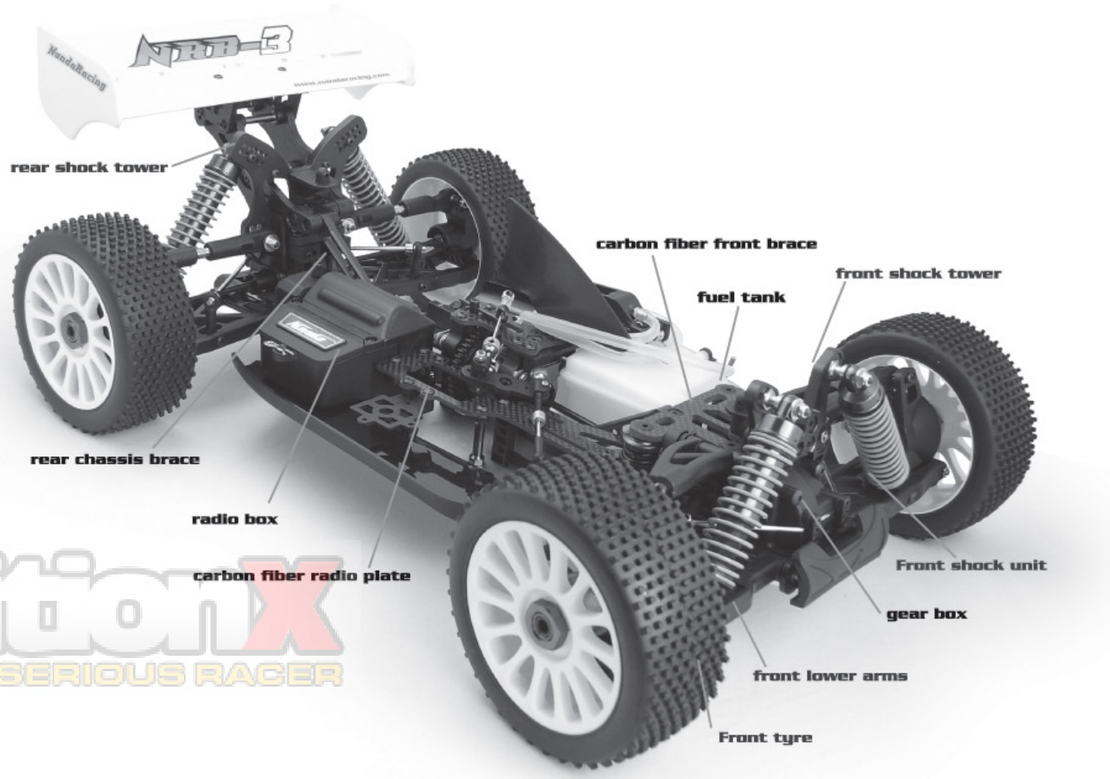

CompetitionX
A WEB SITE FOR THE SERIOUS RACER

IMPORTANT-PLEASE READ BEFORE START

1. Before You Begin

1). Read through the manual before you begin, so you will have an overall idea of what to do.

2). Check all parts. If you find any defective or missing parts, contact your local dealer or our Distributor.

3). How to read the instruction manual:

[Example]

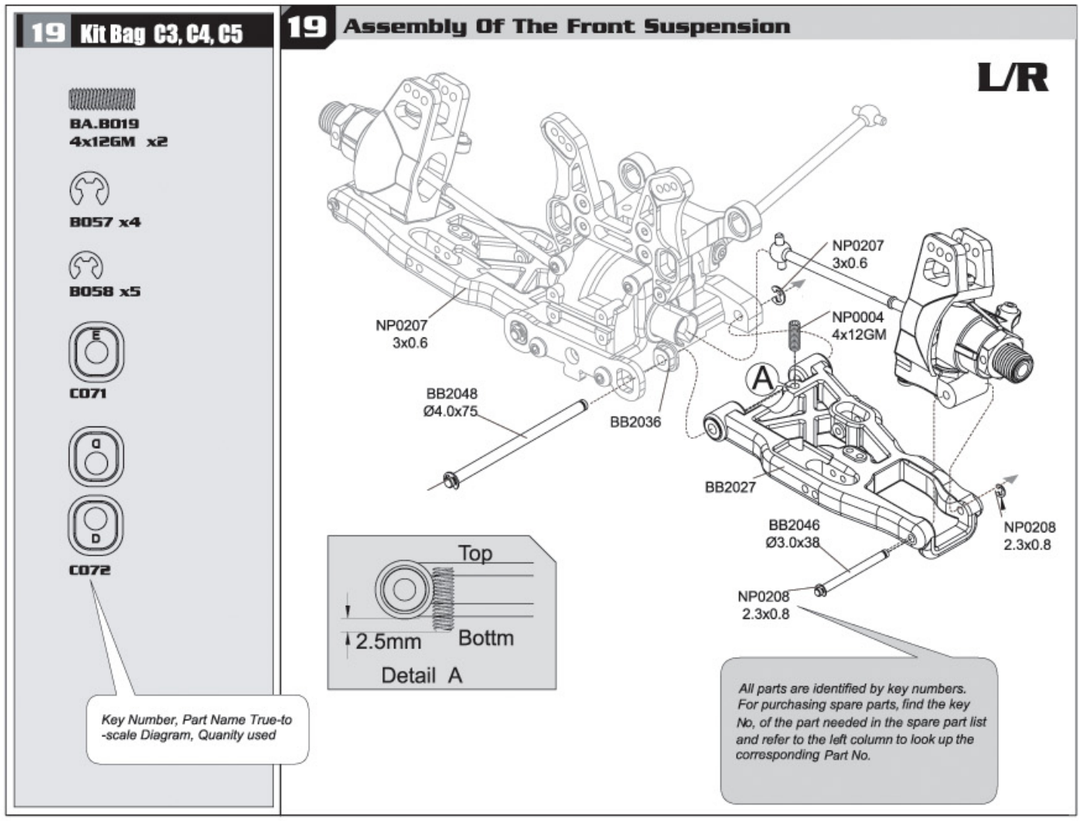

2. Where to run your car?

1). Any running area you choose must be dry. Do not run car near any water or wet dirt.

2). Do not run on streets or tight confined places.It is very easy to have the car run over or damaged by hitting the curb.

3). Do not run near people or animals in case of hitting someone.

4). Due to engine noise, you have to consider the surrounding area when operating the car.

5). Do not operate the car indoor. Engine exhaust is not healthy.

3. Nitro fuel

1). Nitro fuel is poisonous!

2). Nitro fuel is flammable!

3). Do not use any fuel other than nitro fuel in this engine.

4. First Time Starting the Engine Caution!

When starting your engine make sure the following is observed.

1). Set engine Master needle to 3 turns out (rich setting)

2). Do not do this alone, get an experienced friend to help at first.

3). Fill fuel tank, try not to spill fuel. Do not spill fuel on receiver.

4). Turn on the radio and check the linkage before starting engine.

5). Turn on the car receiver battery switch, before start engine.

6). Always have an air filter on the carburetor to keep the dirt out.

5. Emergency Stopping Engine When Running

Remove the air filter and cover carb. intake.

Enter squeeze fuel line and hold until engine stops.

With a rag, cover the exhaust outlet.

6. Storing Car After Running

1). Remove fuel from the fuel tank and fuel lines

2).Turn off radio in car

3). Put a few drops of after run oil in engine to keep it from rusting.

4). Clear oil and dirt from chassis with a degreaser.

7. Precautions

1). This kit is not a toy. Always run your car with a second person as a spotter and pitman.

2). Extreme cautious parts-The pipe, manifold, engine and heatsink are very hot and will cause burns.

3). Rotating Parts-Keep hands away from the drivetrain,wheels, and engine when engine is running.

4). Radio-Check battery life before running the car. If radio does not have full control of the car with steering and/or throttle/brake, change battery immediately. Failure to correct this will result in possible injury and damage to the car or property.

5). Nitro fuel-Do not leave the nitor fuel unattended with the lid off. Fuel contains Methanol and Nitro Methane and is flammable and poisonous.

6). Store fuel in cool ventilated location. Refer to the nitor fuel label for additional precautions.

7). Always turn off the car BEFORE turning off radio.

competitionX
A WEB SITE FOR THE SERIOUS RACER

NANDA NRB-3 INSTRUCTION MANUAL (BB1005F004)
12.20.2006 10:02:46 Uhr

This kit is not a toy! It will require periodic maintenance & work to keep it in top running condition. There are many extremely cautious moving parts, such as the engine heatsink, exhaust system, metal gears, and more. Touching these parts during operation of the car may cause injury! Always check your radio operation before starting the car. Always turn the car and engine off before turning off your radio.Damage caused by losing control of your car is not covered under warranty! Safe operation will ensure a fun time!

Items required to run the:

12"AA"batteries, Model car fuel (20% nitro recommended),

AA-size Batteries

Starter Box

Tools required for maintenance:

#1, #2, #3 Philips + Screwdrivers, #1 Flathead-Screwdriver, metric nut driver set, 17mm nut driver = glow plug wrench(included), wire cutters, needlenose pliers, standard pliers, blue Loctite 242.

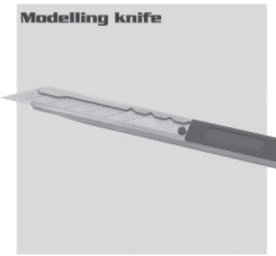

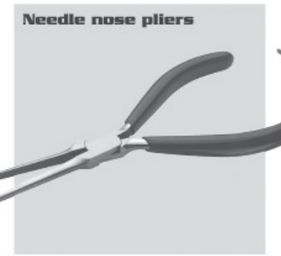

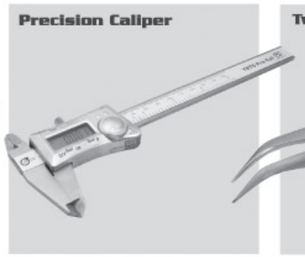

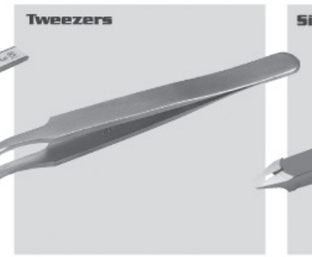

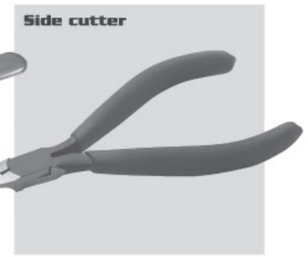

Your 2 Channel Radio Syatem

Please read the instructions provided with your radio system before using it.

The servos must be set at the centre position before installation. To set the servos at a neutral position, turn on the transmitter and receiver. Set the trim levers in the center position and turn off the receiver, and then the transmitter. The servos will be in proper neutral position for installation.

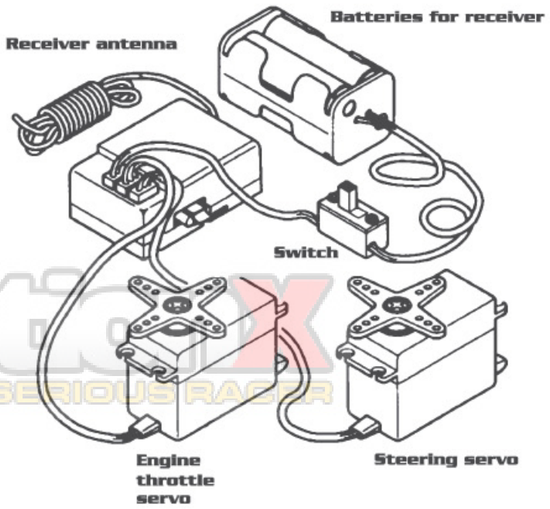

Competitionx
A WEB SITE FOR THE SERIOUS RACER

NANDA NRB-3 INSTRUCTION MANUAL (BB1005F004)
12.20.2006 10:02:46 Uhr

STEP 1 Piuy In Receiver Batteries

picture 1

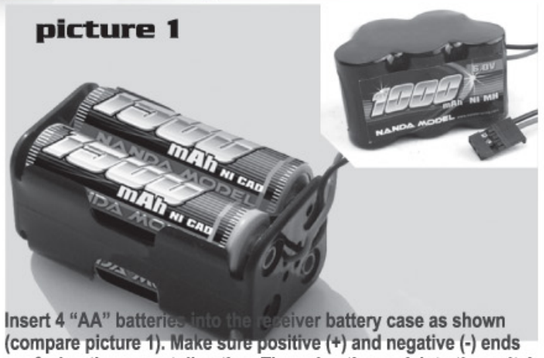

Insert 4 “AA” batteries into the receiver battery case as shown (compare picture 1). Make sure positive (+) and negative (-) ends are facing the correct direction. Then plug the pack into the switch harness, inside the radio case. Black goes to black and red goes to red. Replace the radio case cover.

picture 2

Insert 8 “AA” batteries into the transmitter as shown. Make sure positive (+) and negative (-) ends are facing the correct direction. Then replace the cover, and turn the radio on.

Racer Tip:
Use rechargeable batteries! They last longer in the long run.

STEP 2 CHECK, CHECK 1...2...3...

Now you can switch on your car using the on/off switch located on the radio box. Always turn the radio on before turning your car on. Note: Always check your radio settings before running your car!

picture 3

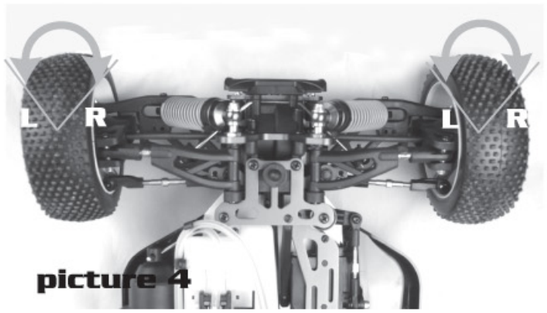

picture 4

Check to make sure your steering is centred. If it is not, use the ST-TRIM tab above the steering wheel. Turning left should make the car turn left, and right is right.

Now it's time to set the throttle neutral position. Remove the air cleaner from the carburetor. The opening on the carb slide should be open very little, from 1-1.5 mm to allow the engine to idle (picture 2). If it is open more than this, the engine may rev higher than normal until brakes are applied. This condition may wear out the brakes and/or clutch shoes prematurely making the car difficult to drive. Use the TH-TRIM tab (picture 3) to move the servo arm into the neutral position if necessary. While in neutral, the brakes should not be set to “drag”. Adjusting the collars with a 1.5 mm hexagonal wrench will change your drag brake settings. Replace the air cleaner when everything is adjusted to your satisfaction.

picture 5

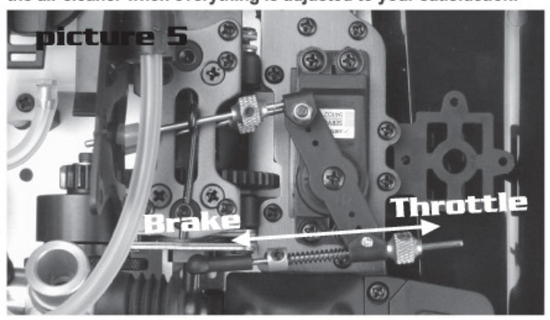

picture 6

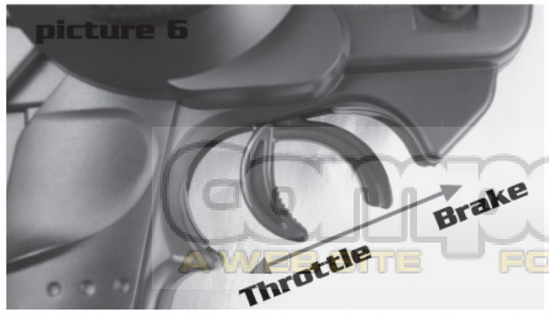

Racer Tip:
A cheap failsafe device to wrap rubberbands or soft hairbands aroung the carburetor body and throttle ball. Electronic failsafes are also available, at your LHS.

STEP 3 Final Preparations...

picture 7

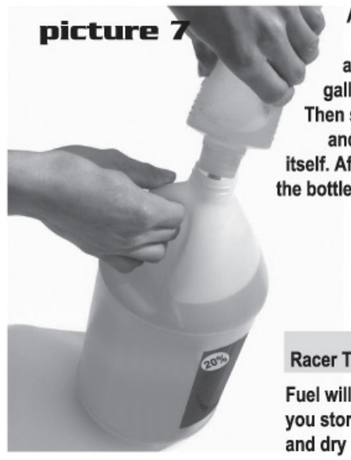

Assemble the 250cc fuel bottle. Then squeeze it, and insert the tip into the gallon of 20% Nitro car fuel. Then slowly release pressure, and the bottle will fill up by itself. Afterward, slowly squeeze the bottle to fill up your fuel tank.

Racer Tip:
Fuel will stay good longer if you store it in a cool, dark, and dry place

The glow igniter goes together with the negative end toward the top. Screw the cap on tighly.

picture 8

Racer Tip:
Never leave the glow igniter on your engine for more than 10 seconds. A longer time may cause the glow plug to burn out prematurely. Use rechargeable igniters for longer life.

STEP 4 SHOWTIME...Almost!

Engine break-in is the most important step to assuring that your engine is fast and reliable throughout its life. DON'T SKIP THIS PART!

picture 9

The SH 21 Racing Engine is pre-set from the factory for break-in. Find a wood block or platform and place the car so that the wheels are off the ground and free. Make sure the throttle is set at neutral with your radio. Place the glow igniter onto the glow plug and give a few short yanks than large ones. Within a few pulls, the engine will start with a good puff of smoke. If the engine has trouble idling at the rich setting, turn the idle screw clockwise 1/8th of a turn at a time. This will increase the idle allowing the car to break-in properly. Unburned in a well-ventilated area, such as your driveway. Unburned oil from the fuel will accumulate under the exhaust, so be prepared. Let the car idle like this for 3-4 tanks of fuel checking the engine temperature every 2 minutes. You should be able to touch the heatsink with your finger-tips and it will be hot, be very careful. If it seems very hot, richen (turn counter-clockwise) the high-end AND low-end needles 1/8th of a turn. Always use small increments when making these kinds of adjustments.

picture 10 High-End Mixture

picture 11

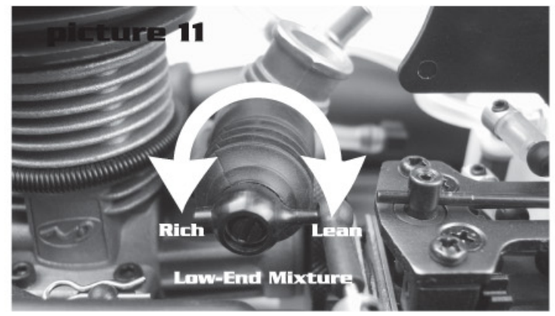

Racer Tip:
Drive your car slowly with the rich setting shortly after break-in period avoiding prolonged periods at full throttle. Gradually lean out the mixture 1/8 of a turn at a time. The idle will increase the more you lean the engine out.

STEP 5 Care And Feeding

Failure to follow break-in procedures and/or damage caused by improper tuning will void your engine warranty!

picture 12

picture 13

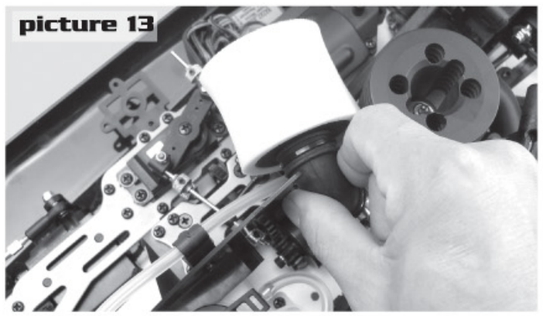

Racer Tip:
Wear gloves when working on your car!

There are two ways to “temp” your engine. One, purchase a temperature gauge. The second less accurate method is the “Spit test”. Wipe a little bit of saliva on the engine heatsink, and it should burn off within 3-4 seconds (the boiling point of water is, naturally, 212F). If it evaporates immediately, chances are the engine is running too hot.

The engine will perform the best and be easier to restart if you run around 220-250F. Depending on your weather conditions, air density, and humidity,your carburetor settings will be changing wherever you decide to run. Making adjustments in small increment is the best way to make sure your engine lasts a long time. Overheating is caused by running the enging too lean, or too much stress on the enginge created by the environment. Extreme overheating will result in internal failure of engine parts. There are many on-line resources that will help you with engine tuning.

When you are done running your car, there are two options to shut the engine down. The first method is to place your thumb over the exhaust outlet. Make sure your engine is at normal idle, preferably with the brake activated. The second method is to pinch off the air supply from the engine. Do not pinch the fuel line, as this may cause the engine to overheat! Try and let all the remaining fuel run through the engine, emptying the fuel tank. The engine will idle high while the tank is empty, so the above two steps may not be necessary.

Then apply after-run oil through the carburetor, and pull the pull-start a few timed to get it through the engine. This is recommended if you plan on storing the car for more than 1 day. Methanol evaporates into water, which is not good for internal engine parts.

It is always a good idea to check all the screws, nuts,and bolts before and after each period of racing, Keeping the car clean will also make it more fun to work on. This can be achieved with a large heavy-duty paintbrush, or compressed air.Always test the transmitter and receiver batteries before starting the engine. And always remember: have fun!

STEP 6 Trouble Shooting

Please read this if...

Engine Won’t Start.

Engine flooded. Too much fuel in engine	Remove glow plug. Pull the pull-start 6-8 times Beware of spraying fuel.
Dead glow plug heater	Remove glow plug. Place glow plug in heater. If the glow plug does not glow bright the plug maybe dead. See also glow heater. (Wear gloves)
Dead Glow heater battery	Place new glow plug in heater. If it glows dull or not at all, replace heater battery.

Empty fuel tank/ No fuel in engine:	Fill fuel tank. Prime fuel to the engine by pulling pull-start once while holding finger tip over muffler (Wear gloves).
Overheating:	Running at high temperatures may cause vapour lock. Let the car cool down for 10-15 minutes

Engine Stalls

Overheating	Check temperature. If over 130 celsius, richen carb mixture. Also check to make sure w heels spin freely.
Disconnected fuel pressure line:	Reattach pressure line from exhaust pipe to fuel tank lid.

Dirty air cleaner:	Wash with soap and water, then use air filter oil.
Carburettor loose:	Check carb-lock bolt and nut. Press carb onto engine block, tighten nut to prevent air leak.

Hard to control, “glitching”

Dead/Weak Batteries:	Batteries in transmitter should be fully charged. Slow servos mean dead receiver batteries.
Improper transmitter settings:	Refer to instructions on setting up your transmitter
Transmitter antenna not extended	Pull out transmitter antenna to full length.
Lost of control	R/C model using same band (frequency) is nearby

Car doesn´t move	Transmitter or chassis power switch is not “ON” Polarity or battery type is wrong Batteries have run down
Doesn´t run straight	Steering trim is not adjusted correctly Front and rear wheel nuts are too loose
Doesn´t stop	Throttle trim is not adjusted correctly
Running too slowly	Motor has lost power Rear wheel nuts are too loose Dust or pebbles are inside the gear

CompetitionX
A WEB SITE FOR THE SERIOUS RACER

NANDA NRB-3 INSTRUCTION MANUAL (BB1005F004)
12.20.2006 10:02:46 Uhr

01 Kit Bag A1, A, N,

x4 GD0008 8x16x5

x8 NP0163 3x12NKD

x2 NP0003 4x4GM

x8 BB2003 0.2x3.6x12

x4 BB2003 6.0x12x0.2

x4 BB2001 9.6x5.8x1.9 O-Ring

01 Assembly Of The Front And Rear Diff.

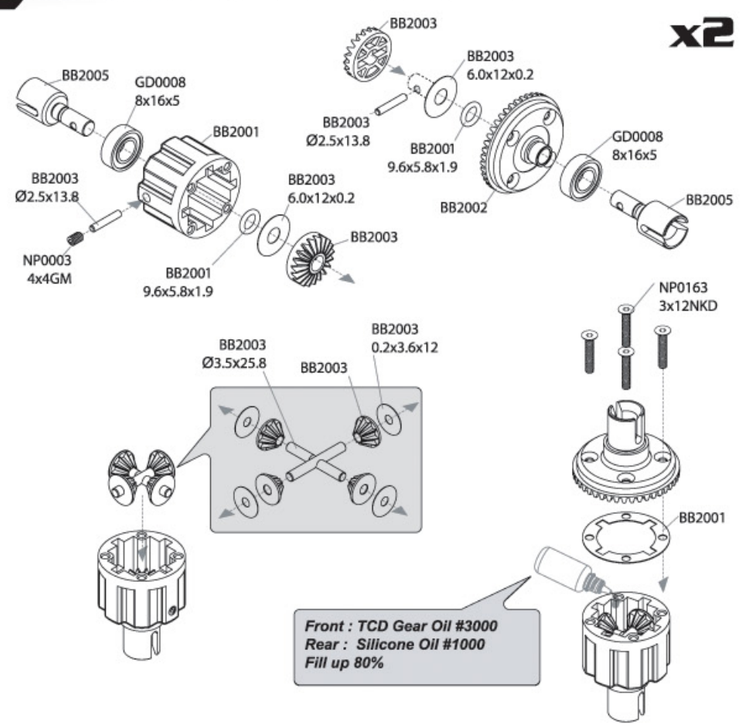

02 Kit Bag B, B1, N,

x2 GD0008 8x16x5

x4 NP0163 3x12NKD

x1 NP0003 4x4GM

x4 BB2003 0.2x3.6x12

x2 BB2003 6.0x12x0.2

x2 BB2001 9.6x5.8x1.9 O-Ring

02 Assembly Of The Center Diff.

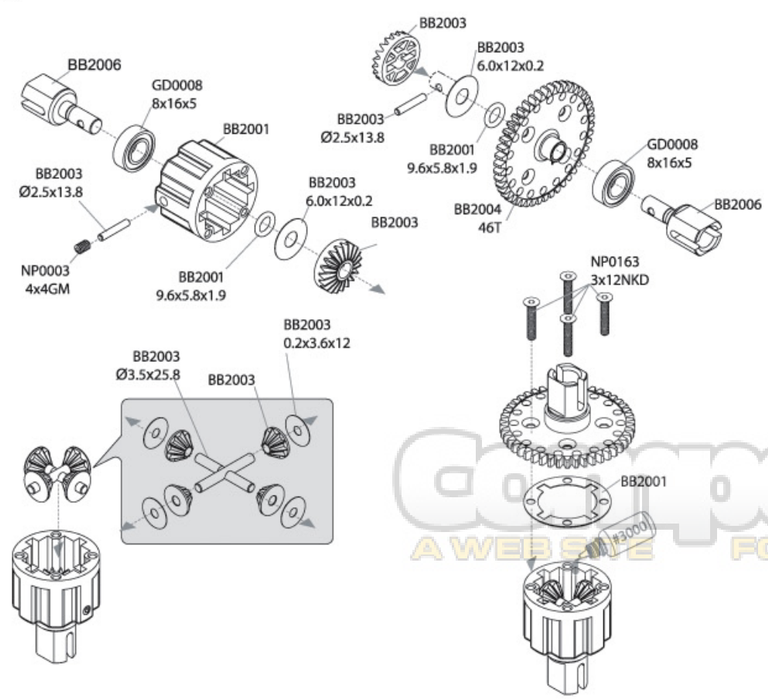

03 Kit Bag D,D3,D5,N

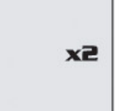

x2 GD0008 8x16x5

x2 NP0203 13x16x0.2

x1 NP0192 4x20NPD

x1 NP0160 4x25NPD

x2 NP0169 4x42NKD

04 Kit Bag D,D2,D5

x4 NP0158 4x12NPD

x1 NP0172 5x4GM

05 Kit Bag D,D4

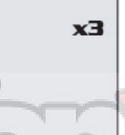

x3 NP0187 3x10NKD

x2 NP0182 4x10NKD

03 Assembly Of The Rear GearBox (1)

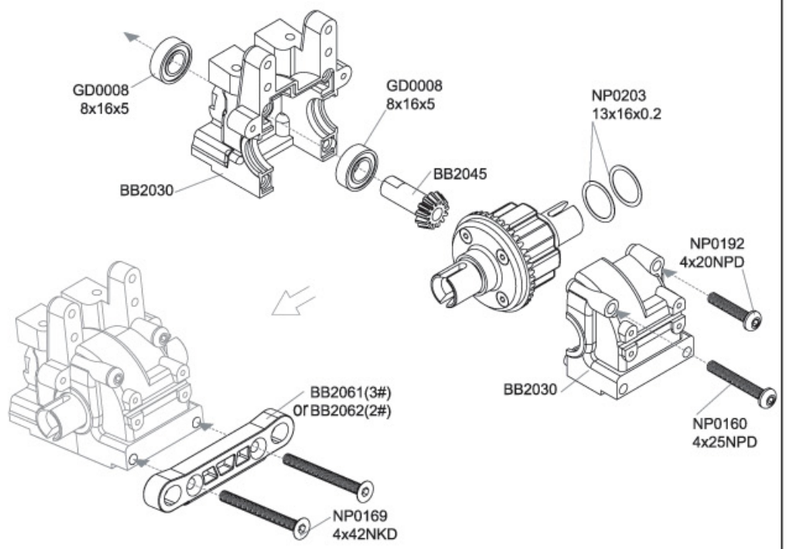

04 Assembly Of The Rear GearBox (2)

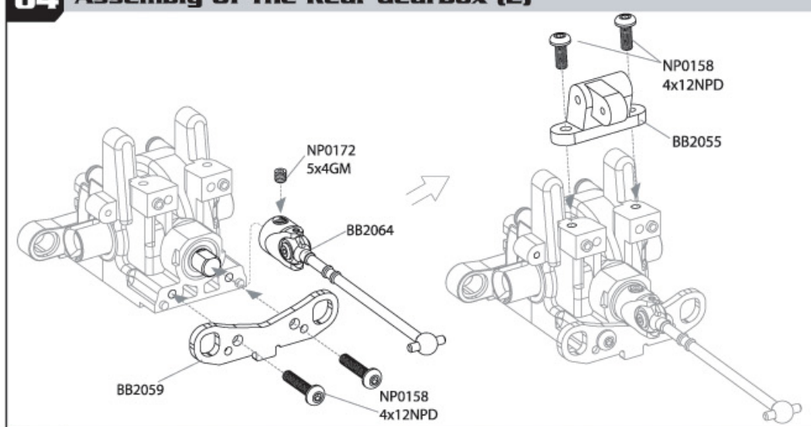

05 Assembly Of The Rear Shock Stay

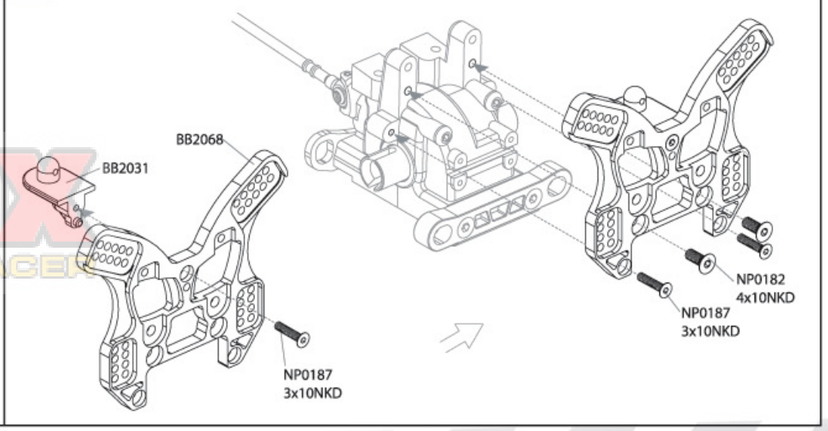

Competition
A WEB SITE FOR THE SERIOUS RACER

NANDA NRB-3 INSTRUCTION MANUAL (BB1005F004)
12.20.2006 10:02:46 Uhr

06 Kit Bag D1, D3, D5

NP0177 3x12NPD x4

NP0155 3x18NPD x4

NP0159 4x16NPD x2

NP0158 4x12NPD x2

NP0082 x2

06 Assembly Of The Wing Stay

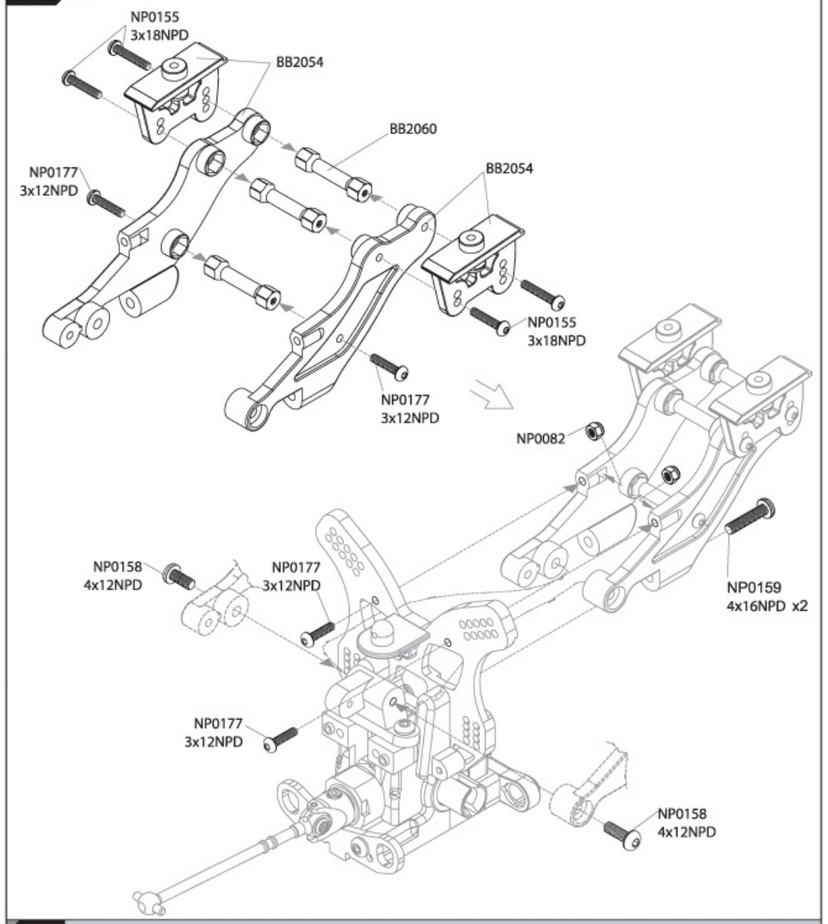

07 Kit Bag D1, D2, D3, D5

BB2042 Ø3.0x16.8 x2

NP0005 5x5GM x2

NP0004 4x12GM x2

GD0008 8x16x5 x4

NP0208 2.3x0.8 x4

07 Assembly Of The Rear Suspension

L/R

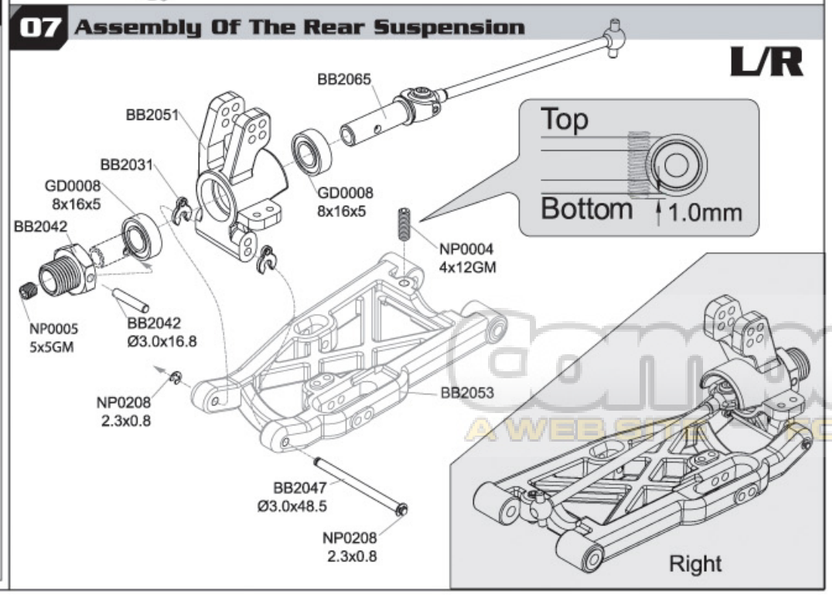

08 Kit Bag D, D3, D4, D5

NP0207 x4

08 Assembly Of The Rear Suspension

L/R

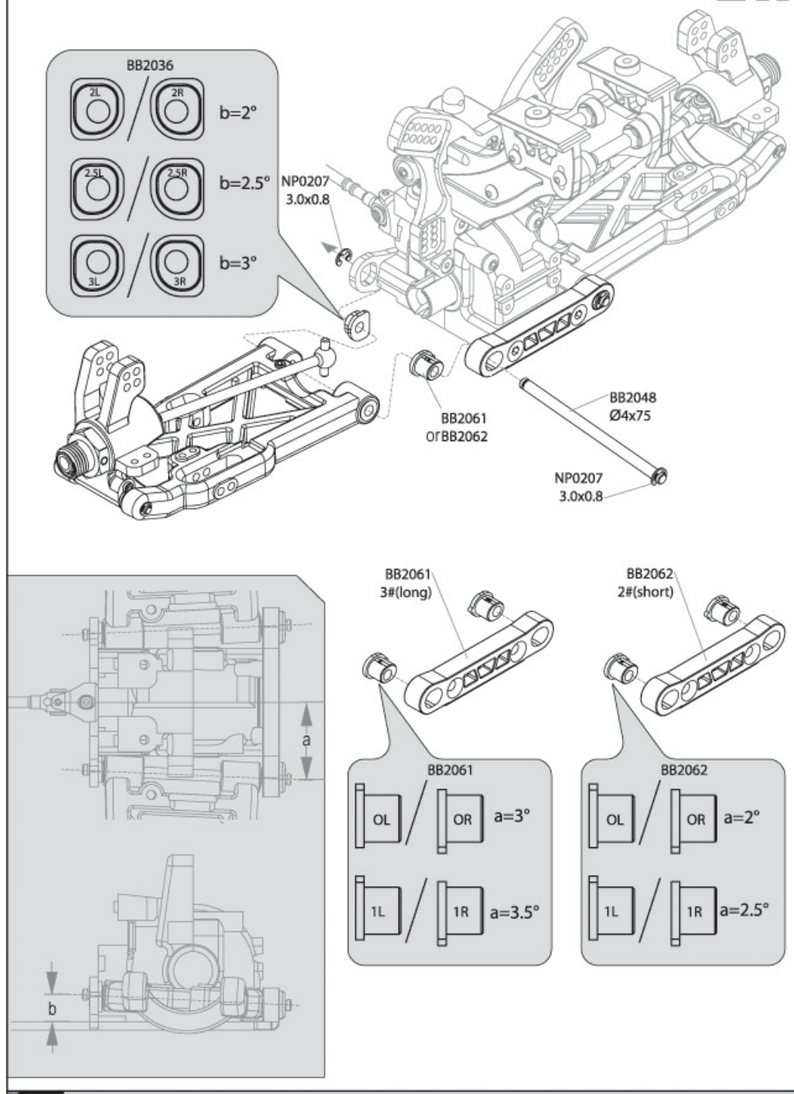

09 Kit Bag D, D3

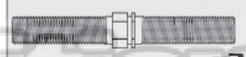
BB2066 x2

BB2069 x2

BB2069 x2

09 Assembly Of The Upper Arm

L/R

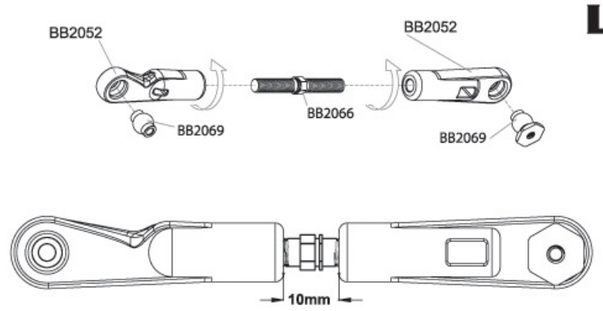

CompetitionX
A WEB SITE FOR THE SERIOUS RACER

NANDA NRB-3 INSTRUCTION MANUAL (BB1005F004)
12. 20. 2006 10:02:46 Uhr

10 Kit Bag D5

- NP0082 x4
- BB2069 x2
- NP0156 3x20NPD x2
- NP0157 3x25NPD x2

11 Kit Bag D3,D4,D5

- BB2063 x2
- BB2063 x2
- NP0002 3x12GM x2
- NP0053 3x16NPD x2

12 Kit Bag D4,D5

- NP0001 3x3GM x4
- NP0194 2.5x6NKD x4

10 Assembly Of The Rear Upper Arm

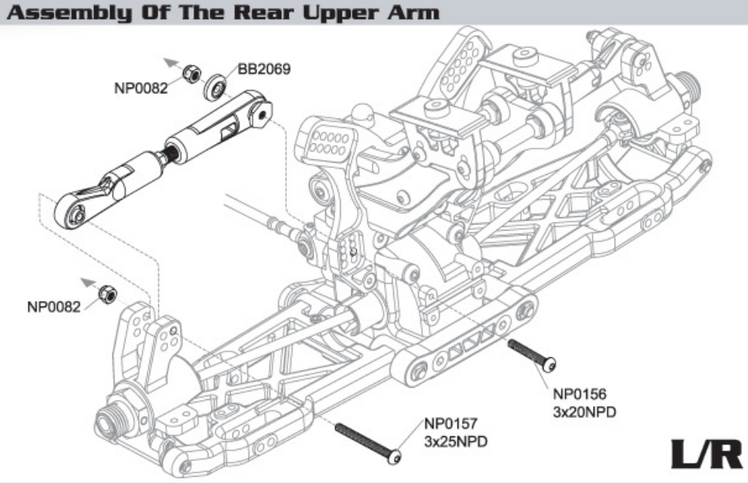

L/R

11 Assembly Of The Rear Anti-Roll Bar(1)

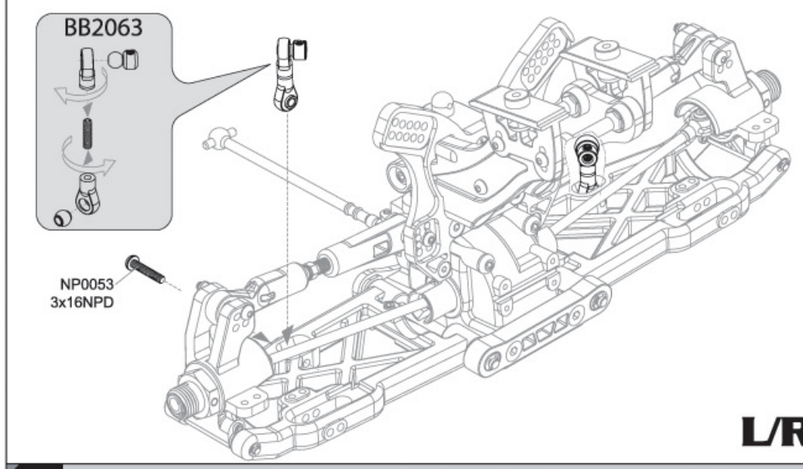

L/R

12 Assembly Of The Rear Anti-Roll Bar (2)

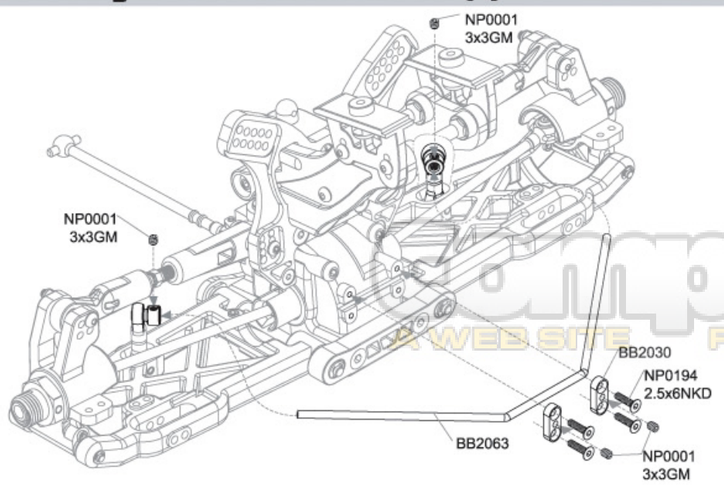

13 Kit Bag D5, H

- NP0182 4x10NKD x2
- NP0167 4x16NKD x2

14 Kit Bag D5, K

- NP0156 3x20NPD x1
- NP0082 x2
- NP0187 3x10NKD x2

13 Assembly Of The Rear End

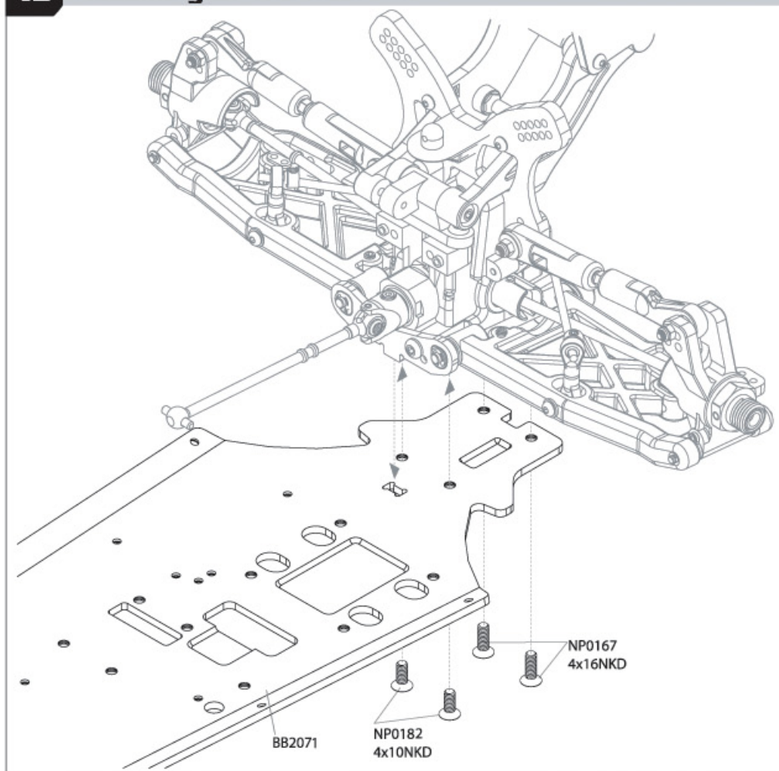

14 Assembly Of The Rear Stiffener Brace

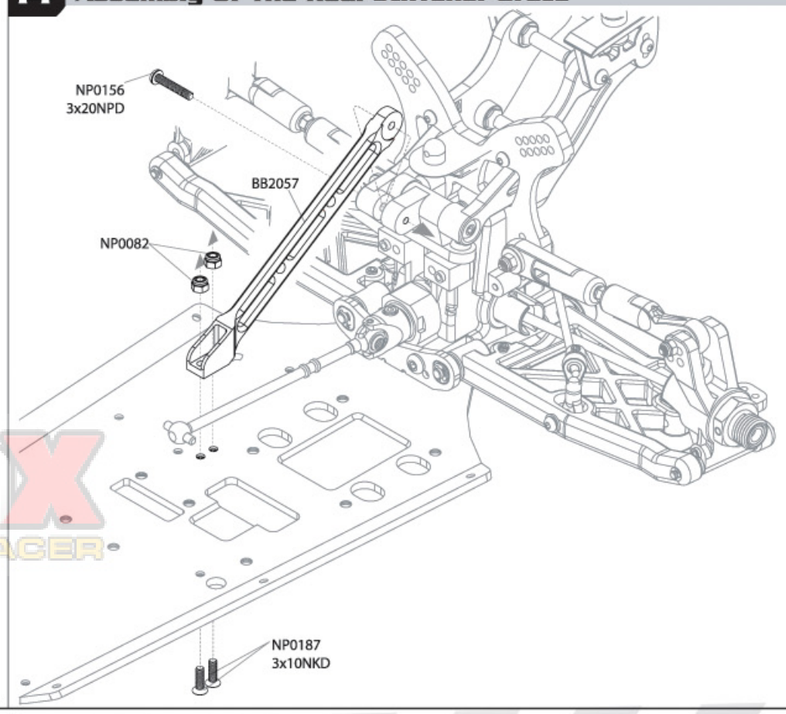

competitionX
A WEB SITE FOR THE SERIOUS RACER

15 Kit Bag C, C3, C5, N

- x2 — GD0008 8x16x5
- x2 — NP0203 13x16x0.2
- x1 — NP0192 4x20NPD
- x1 — NP0160 4x25NPD
- x2 — NP0190 4x40NPD

16 Kit Bag C, C2, C5

- x1 — NP0172 5x4GM
- x4 — NP0166 4x14NKD

17 Kit Bag C, C5

- x2 — NP0187 3x10NKD
- x4 — NP0182 4x10NKD

15 Assembly Of The Front GearBox (1)

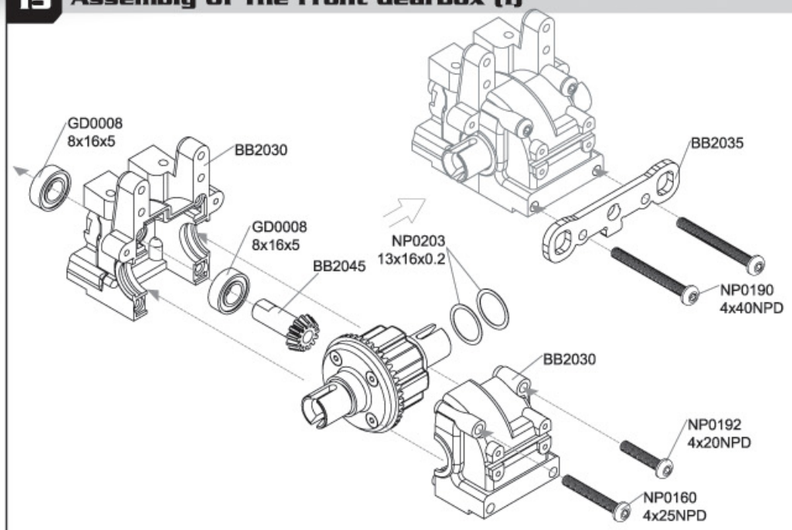

16 Assembly Of The Front GearBox (2)

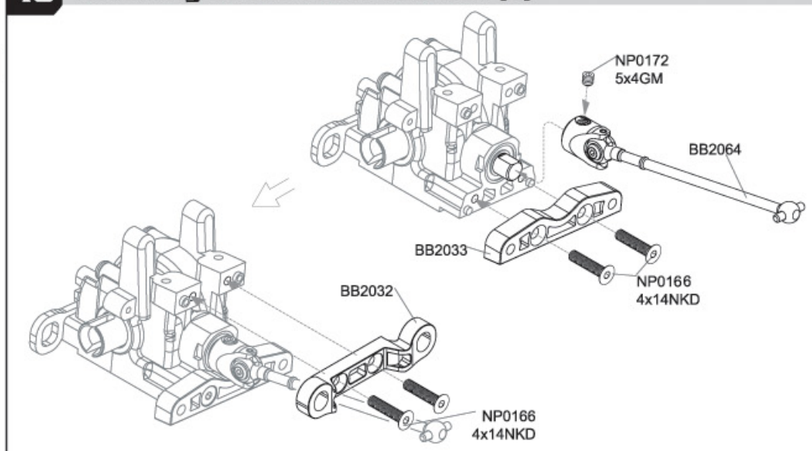

17 Assembly Of The Front Shock Stay

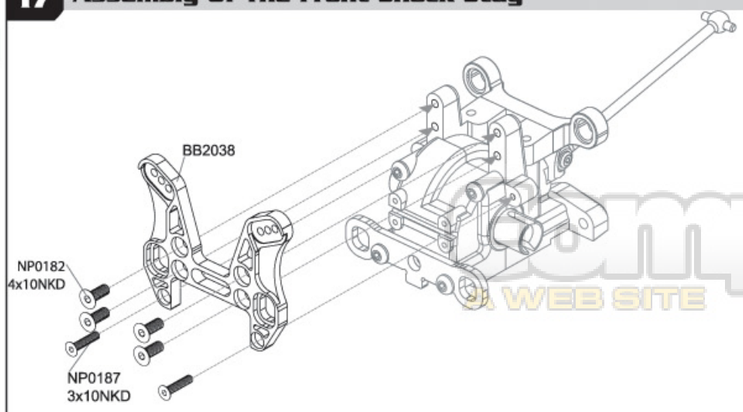

18 Kit Bag C1, C2, C3, C5

- x4 — GD0008 8x16x5
- x2 — NP0158 4x12NPD
- x2 — NP0109 0.8x4.1x8
- x4 — NP0177 3x12NPD
- x2 — NP0159 4x16NPD
- x2 — BB2050
- x2 — NP0005 5x5GM
- x2 — BB2042 3x16.8
- x2 — BB2050

19 Kit Bag C3, C4, C5

- x2 — NP0004 4x12GM
- x4 — NP0207
- x4 — NP0208
- x2 / x1 / x1 — BB2036

18 Assembly Of The Front Steering Knuckle

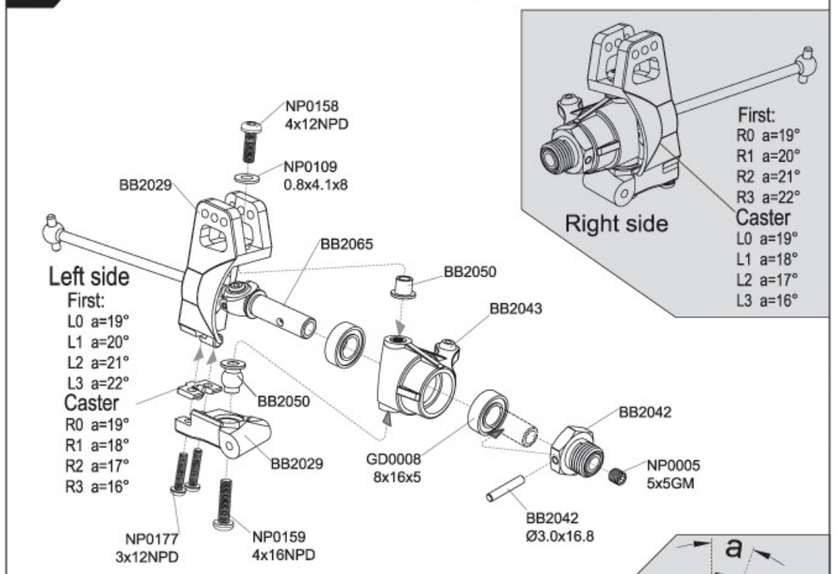

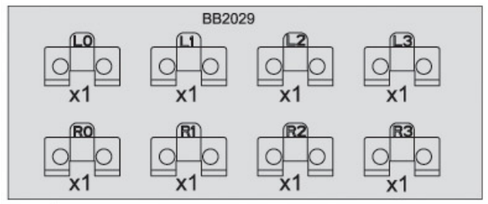

19 Assembly Of The Front Suspension

L/R

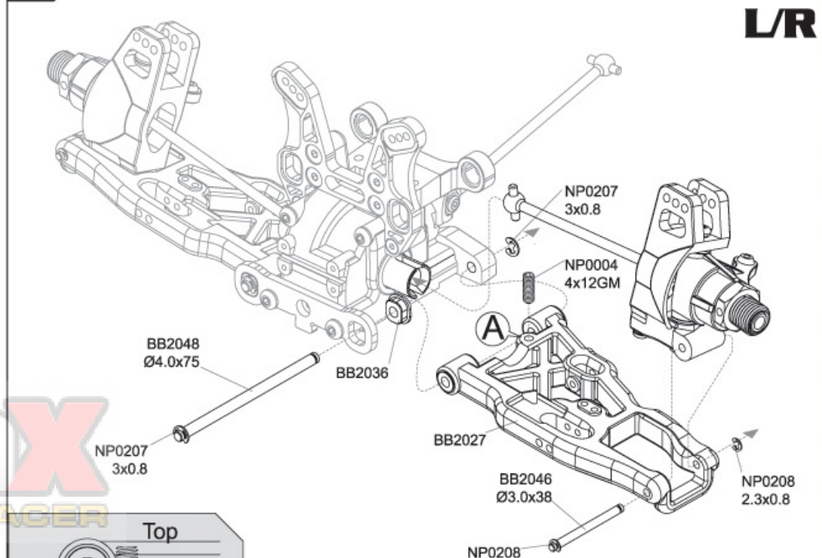

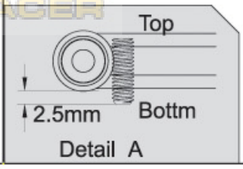

CompetitionX
THE WEB SITE FOR THE RC RACER

20 Kit Bag C,C3,C4,C5

20 Assembly Of The Front Upper Arm

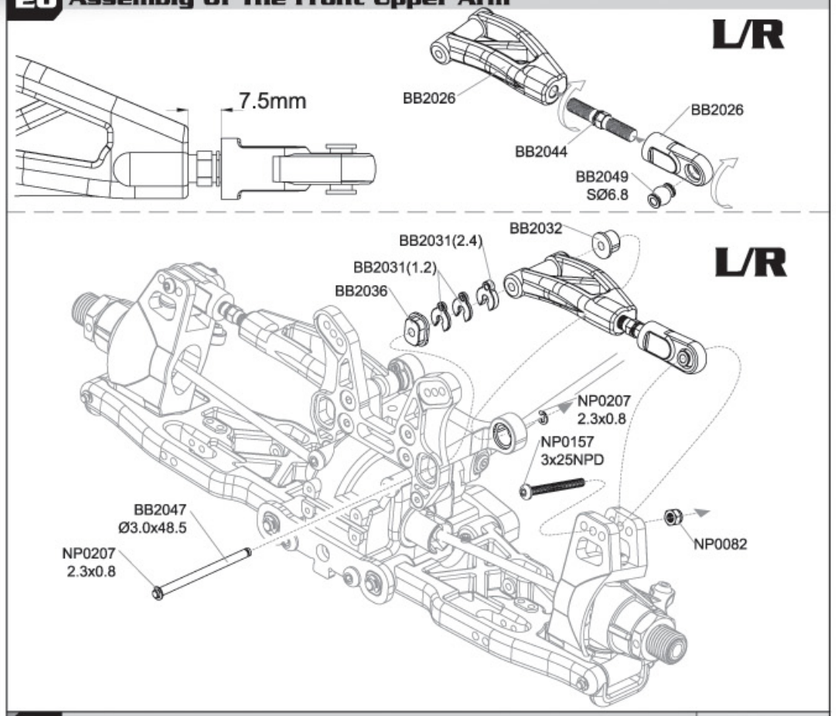

21 Kit Bag C3,C5

21 Assembly Of The Front Anti-Roll Bar

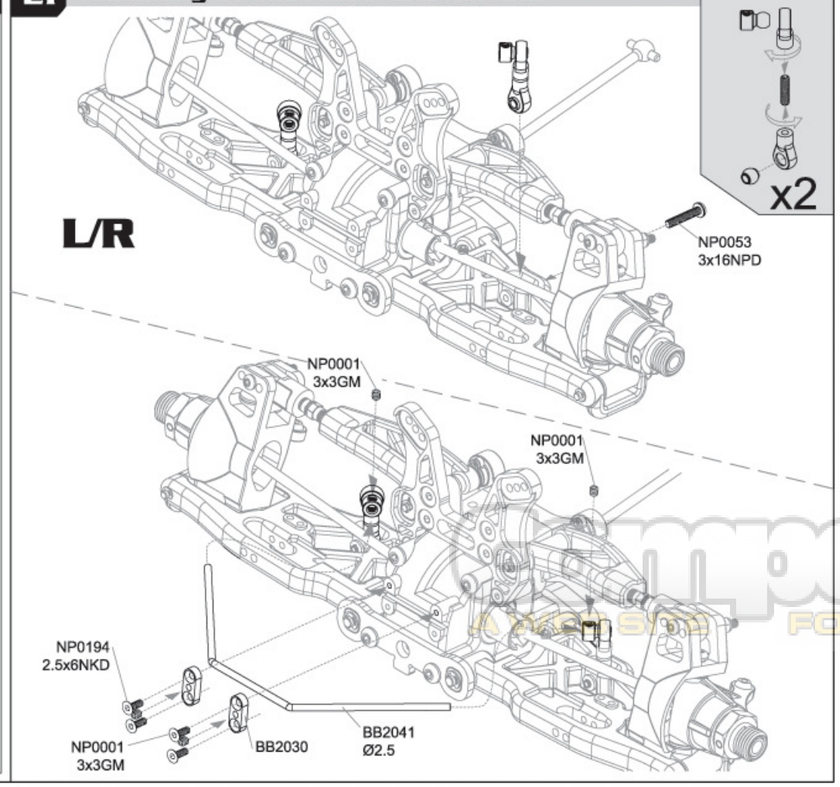

22 Kit Bag C,C5

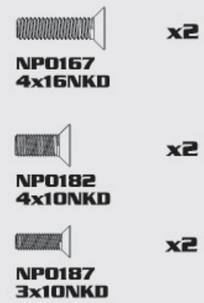

22 Assembly Of The Front End

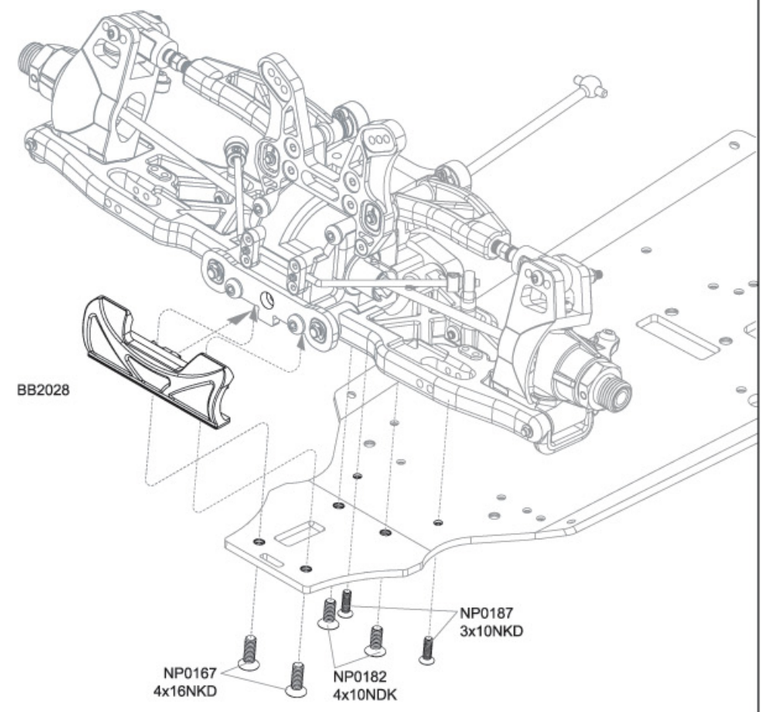

23 Kit Bag F,F1,F2

23 Assembly Of The Center GearBox

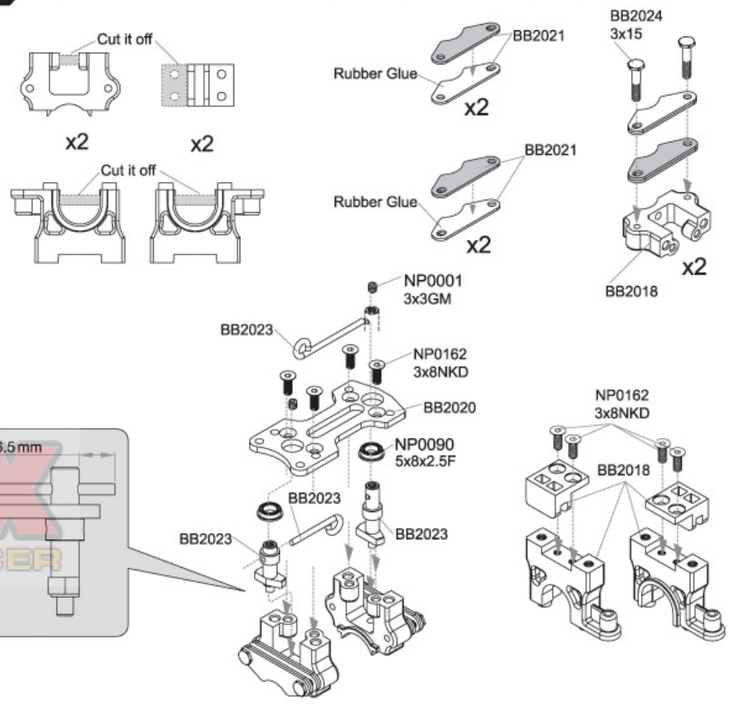

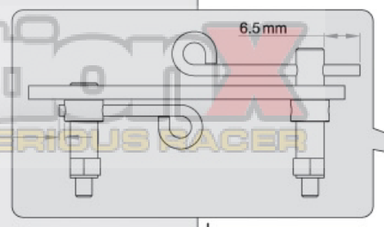

Competition X
A NEW SIDE FOR THE SERIOUS RACER

24 Kit Bag F,F1,F2

24 Assembly Of The Center GearBox

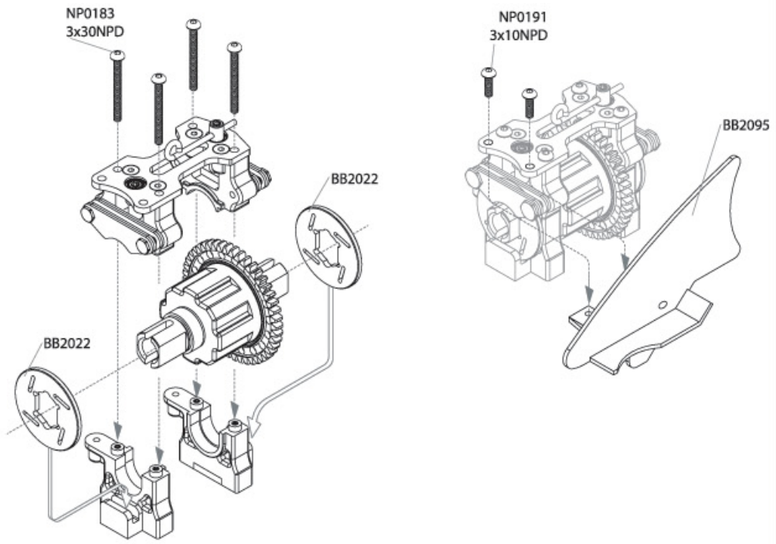

25 Kit Bag F2

25 Assembly Of The Center GearBox onto Chassis

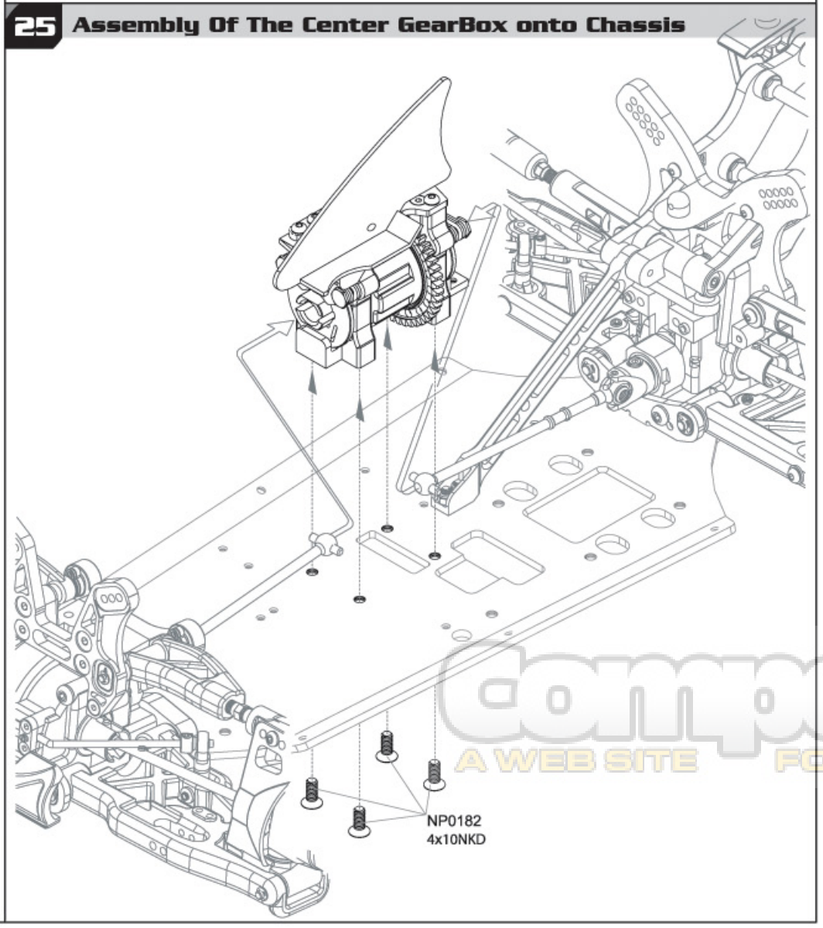

26 Kit Bag E, E1, E2

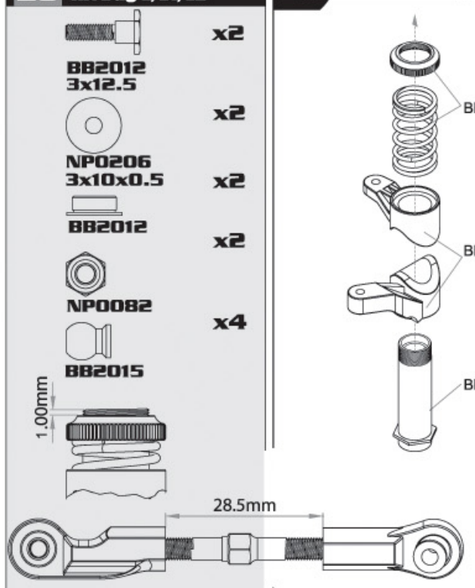

26 Assembly Of The Sever Saver

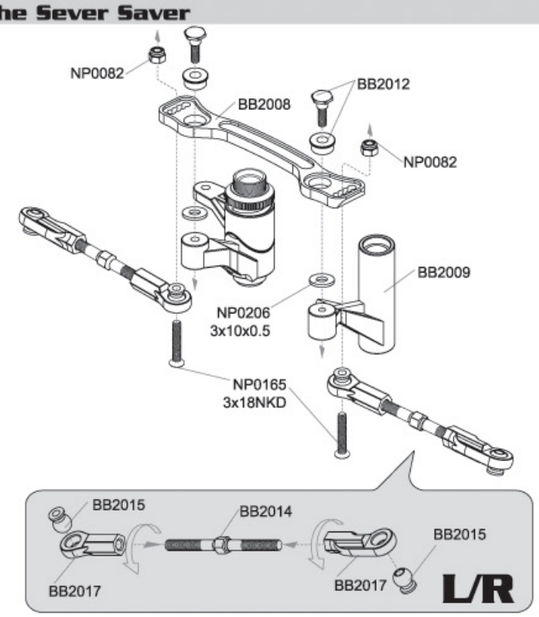

27 Kit Bag C, C5, E1, K

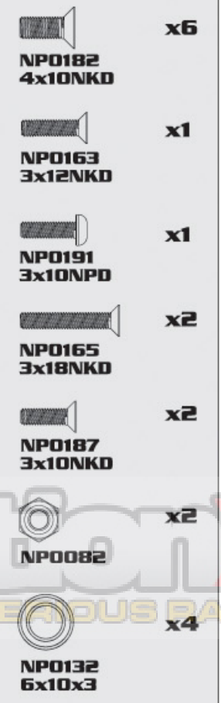

27 Assembly Of The Sever Saver onto Chassis

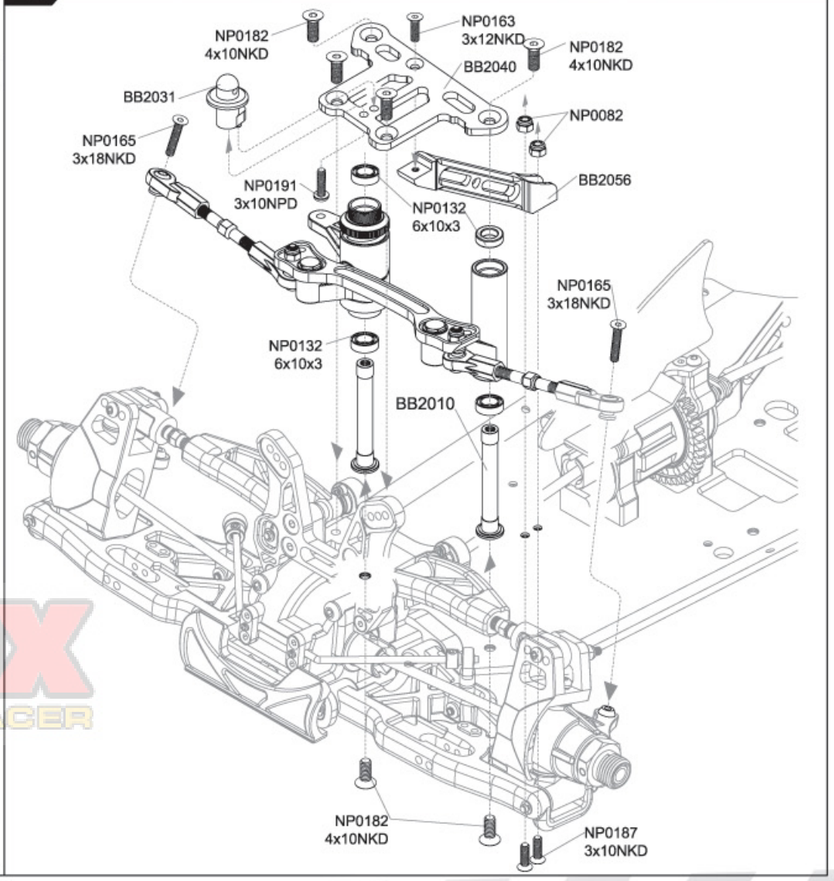

competitionX
A WEB SITE FOR THE SERIOUS RACER

28 Kit Bag G, G2

x6

NP0191
3x10NPD

x8

NP0053
3x16NPD x8

28 Assembly Of The Radio Plate

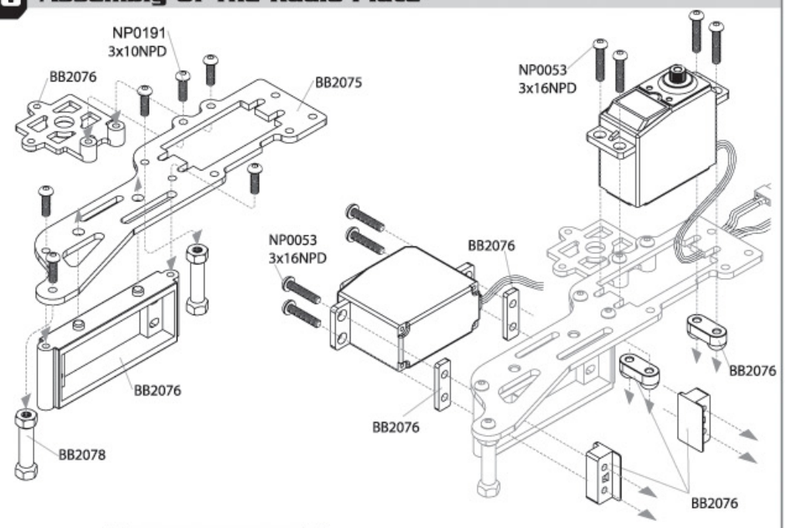

29 Kit Bag G, G2

x6

NP0191
3x10NPD

29 Assembly Of The Receiver Box

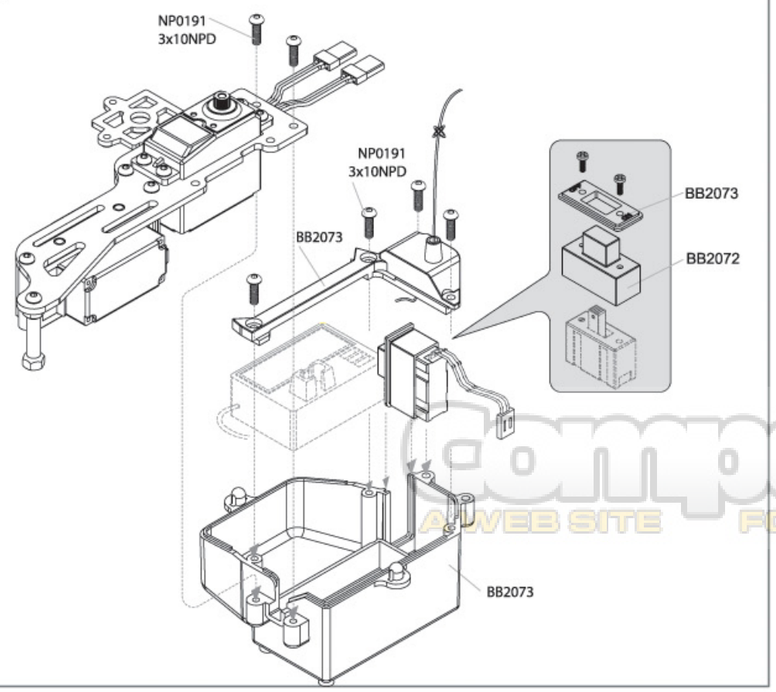

30 Kit Bag G, G2, H, I

x2

BB2070

31 Kit Bag G2

x2

NP0191
3x10NPD

x7

NP0187
3x10NKD

30 Assembly Of The Receiver Box

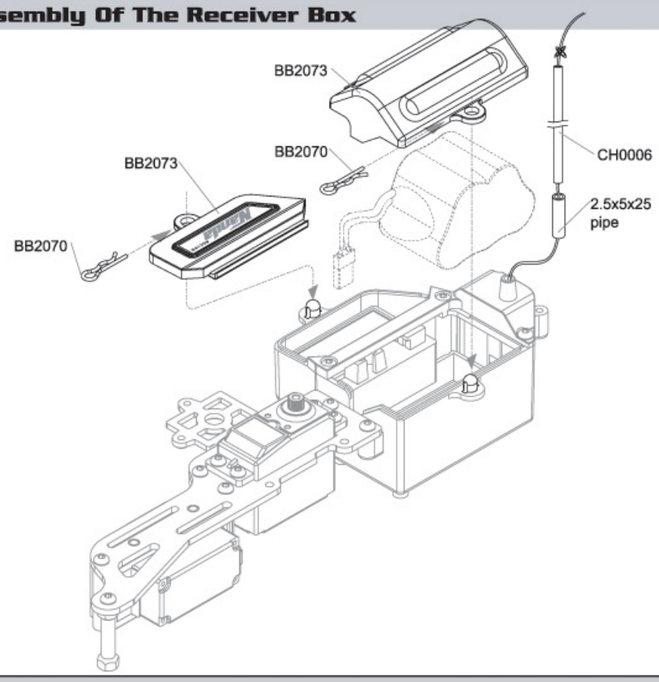

31 Assembly Of The Radio Tray onto Chassis

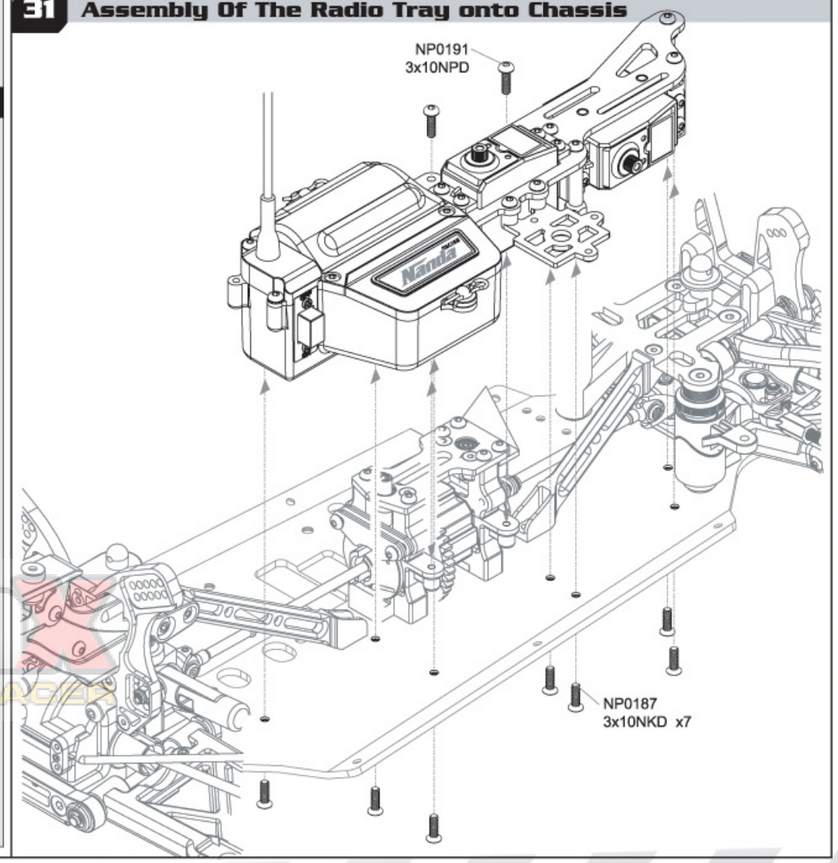

competition
A WEB SITE FOR THE SERIOUS RACER

NANDA NRB-3 INSTRUCTION MANUAL (BB1006F004)
12.20.2006 10:02:46 Uhr

32 Kit Bag I, I1

- NP0177 3x12NPD — x2
- NP0195 3x6NPD — x2
- NP0187 3x10NKD — x2
- BB2097 — x2

33 Kit Bag M1, M2

- EN0005 — x1
- BB2110 — x1
- NP0112 0.5x7.1x12 — x1
- BB2111 — x3

32 Assembly Of The Fuel Tank

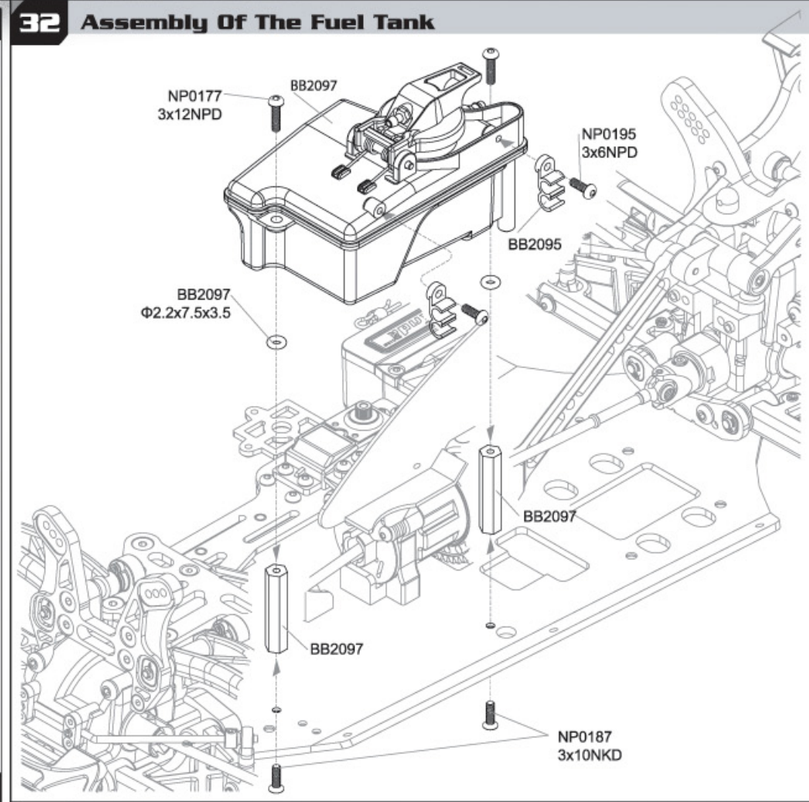

33 Assembly Of The Clutch Bell And Engine Mount (1)

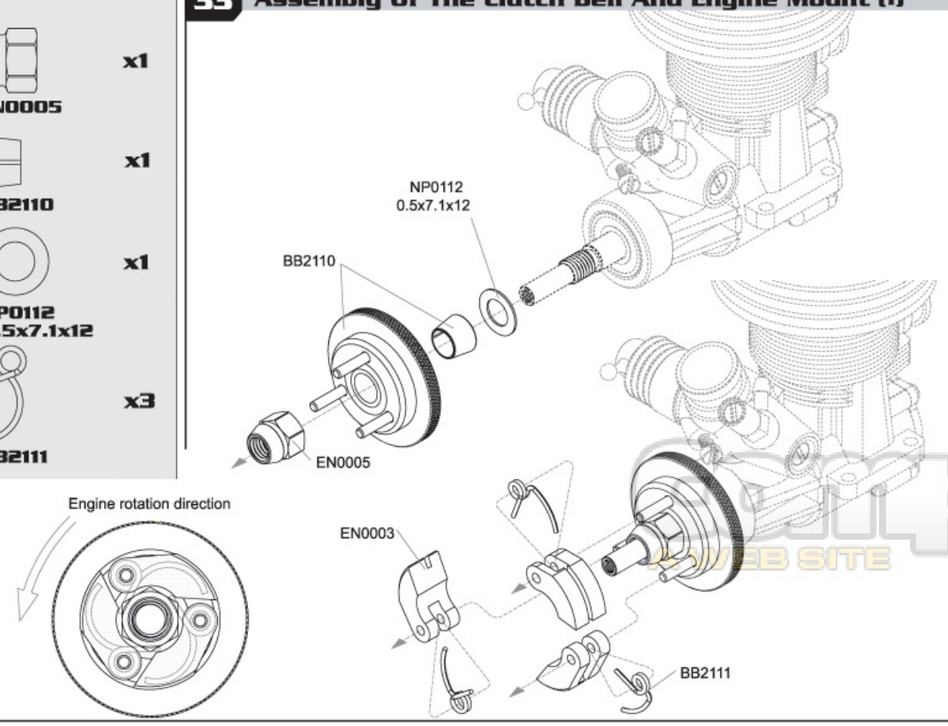

34 Kit Bag M2

- NP0046 3X10NMD — x1
- NP0047 3X16NMD — x4
- NP0108 0.8x3.2x9 — x1
- NP0091 5x10x4 — x2
- NP0114 0.2x5.1x9 — x1
- NP0209 0.3x5.1x9 — x1

35 Kit Bag M2

- BB2112 — x4
- NP0186 4x8NKD — x4

34 Assembly Of The Clutch Bell And Engine Mount (2)

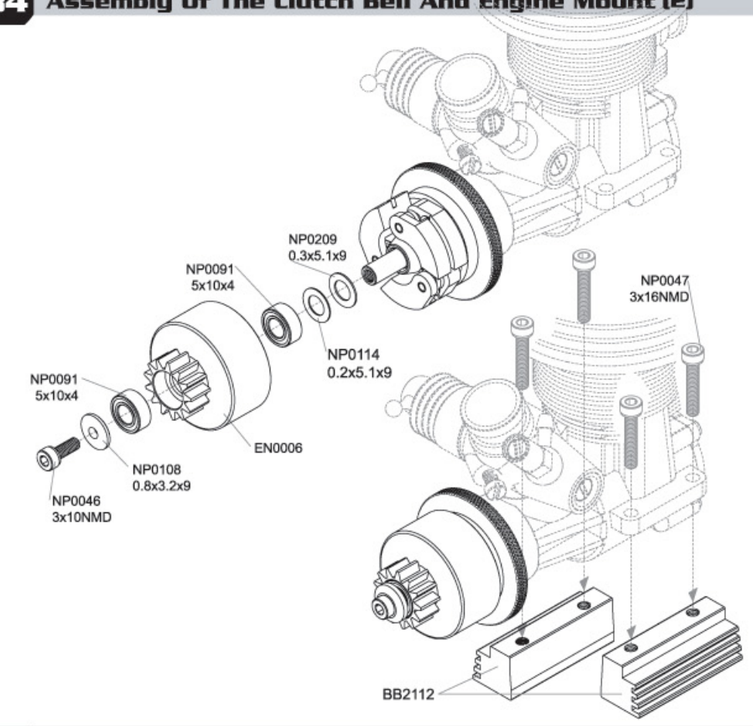

35 Assembly Of The Engine onto Chassis

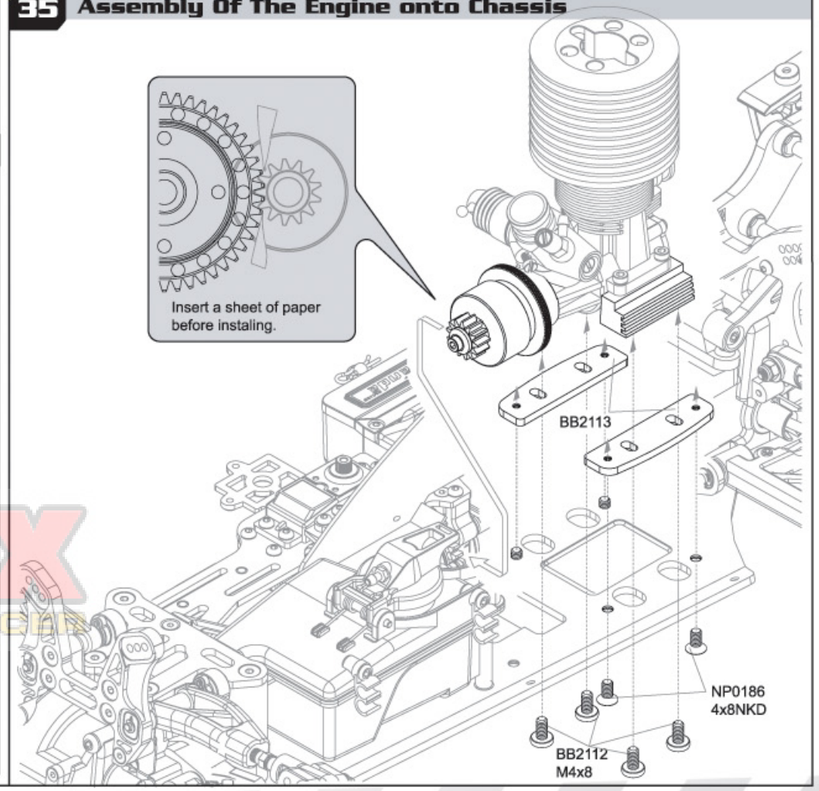

competitionX
WEB SITE FOR THE SERIOUS RACER

NANDA NRB-3 INSTRUCTION MANUAL (BB1005F004)
12.20.2006 10:02:46 Uhr

36 Kit Bag M1, M2

NP0003 4x4GM	x1
NP0187 3x10NKD	x2

37 Kit Bag G1, G2

BB2077	x1
NP0079	x1
NP0007 2x10PM	x1
NP0210 2.5x20PM	x1
NP0001 3x3GM	x4

38 Kit Bag E, E2, G1, G2

BB2016	x2
NP0082	x2
(NP0191 3x10NPD)	x2
NP0164 3x14NKD	x1
NP0165 3x18NKD	x1
NP0001 3x3GM	x2

36 Assembly Of The Manifold and Muffler

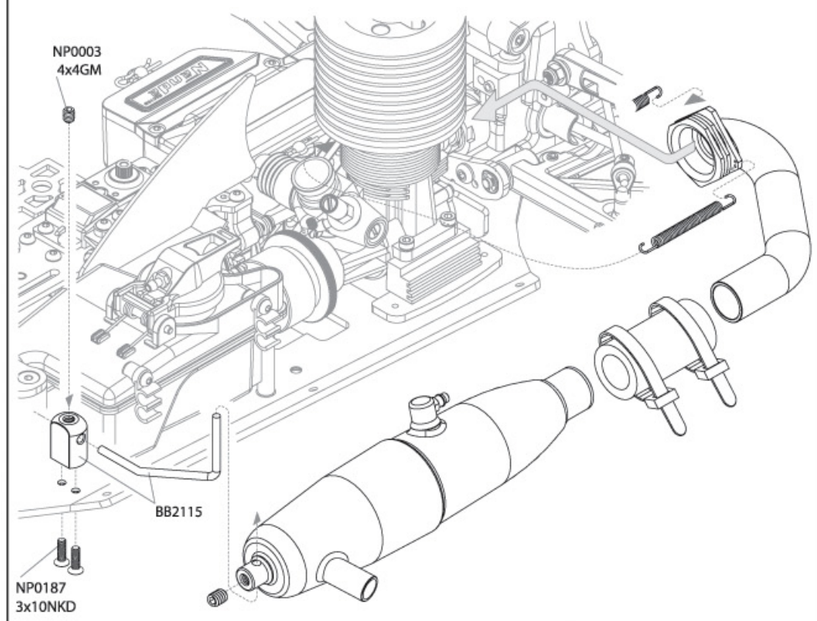

37 Assembly Of The Throttle Linkages (1)

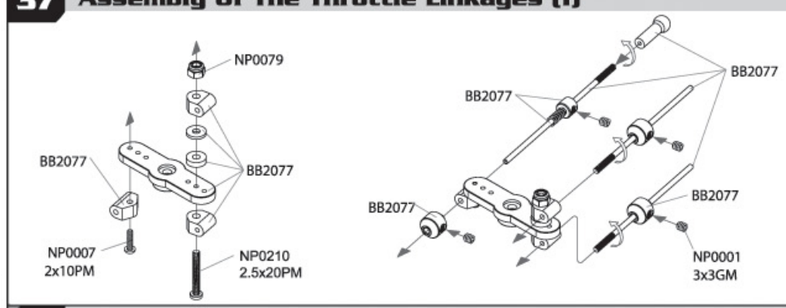

38 Assembly Of The Throttle Linkages (2)

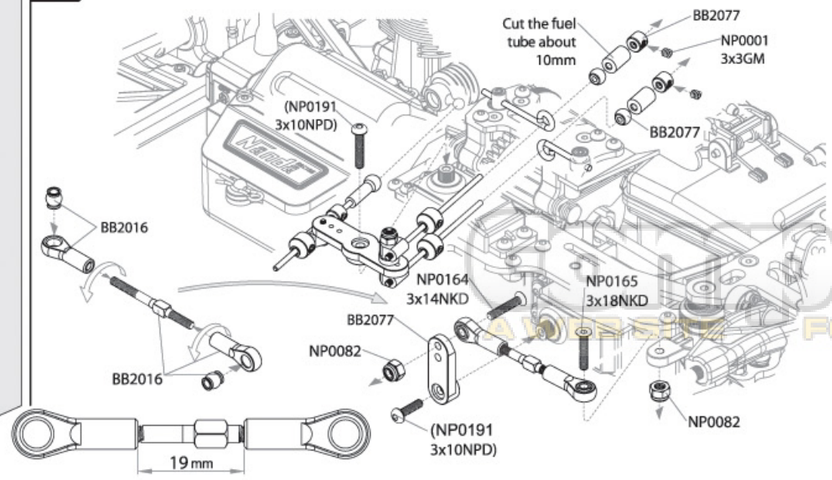

39 Throttle Linkage Adjustment

Brake Adjusting Knobs
*Upper linkage-Rear Brake
*Lower linkage-Front Brake

40 Kit Bag M

NP0177 3x12NPD	x1

40 Assembly Of The Air Filter

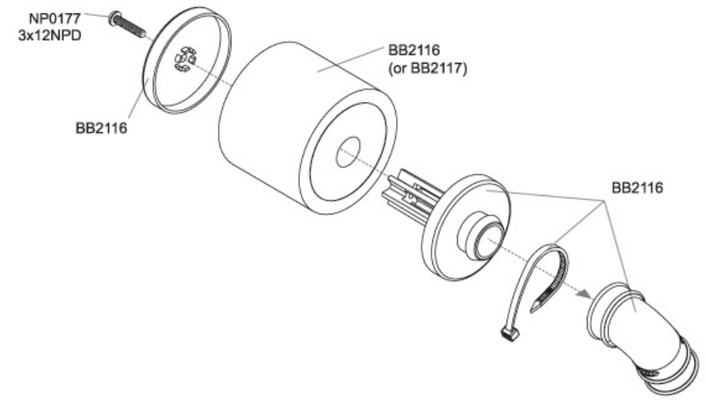

41 Kit Bag M

41 Assembly Of The Air Filter Onto Chassis

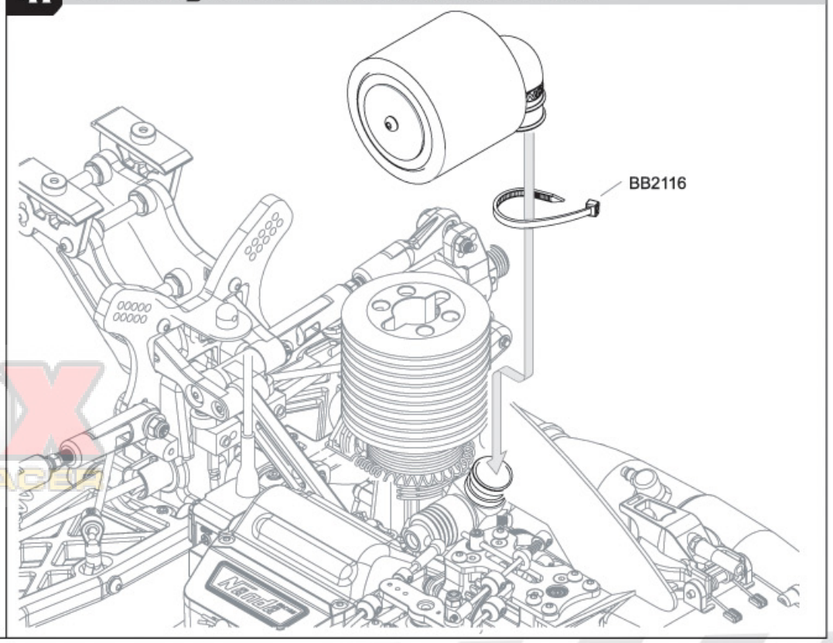

Competition X
A MAGAZINE FOR THE SERIOUS RACER

NANDA NRB-3 INSTRUCTION MANUAL (BB1005F004)
12. 20. 2006 10:02:46 Uhr

42 Kit Bag J

- NP0079 x4
- BB2084 x4
- BB2089 orBB2090 0.4x2.6x6.5 x4
- BB2088 O-Rang x8
- BB2088 x4
- BB2088 x4
- BB2088 x4
- BB2083 x2
- BB2083 x2
- BB2092 SØ6.8 x4

42 Assembly Of The Shock

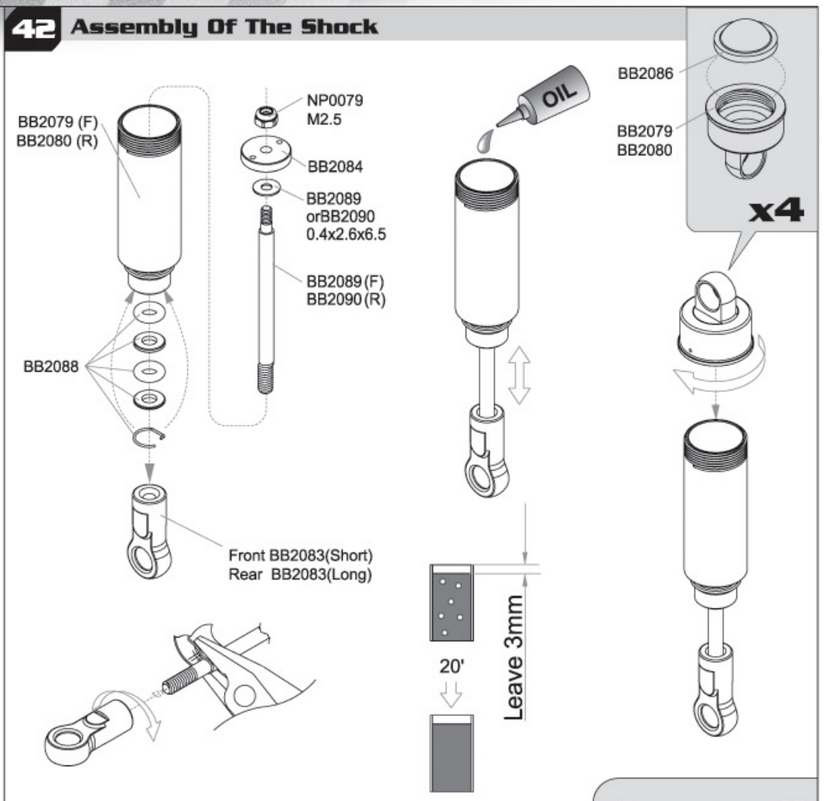

Front x2
Rear x2

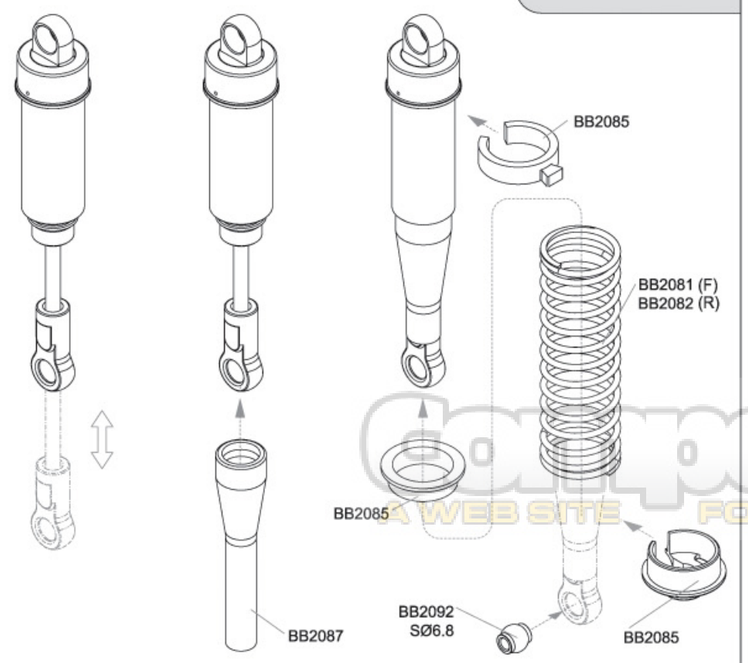

43 Kit Bag J2,J5

- NP0157 3x25NPD x4
- NP0108 0.8x3.2x9.0 x2
- NP0082 x2

43 Assembly Of The Front Shock Absorber

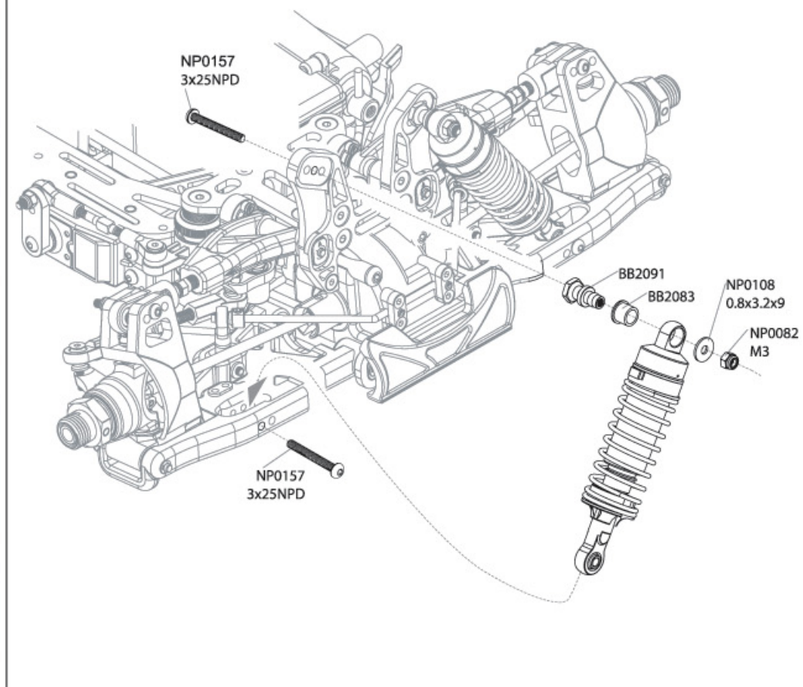

44 Kit Bag J2,J5

- NP0157 3x25NPD x4
- NP0108 0.8x3.2x9.0 x2
- NP0082 x2

44 Assembly Of The Rear Shock Absorber

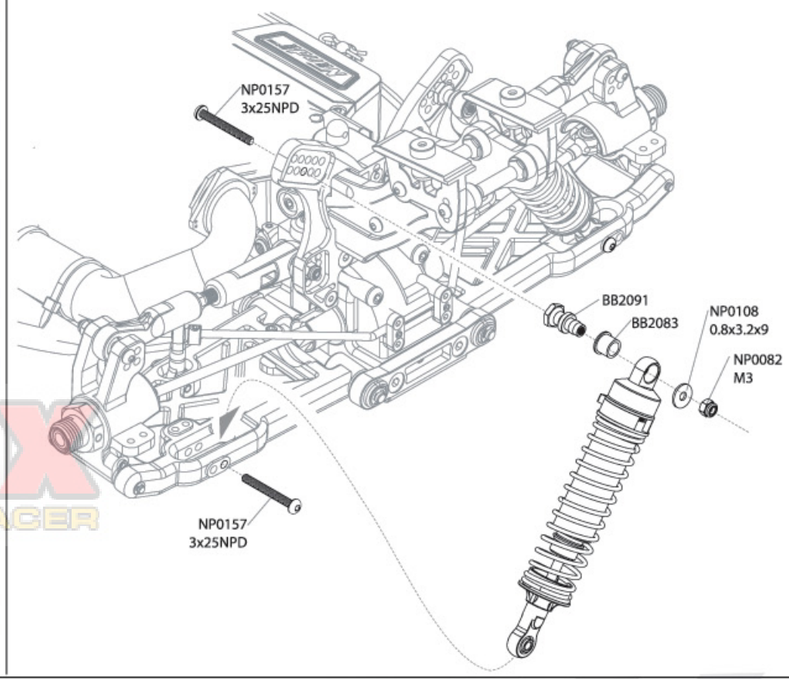

CompetitionX
A WEB SITE FOR THE SERIOUS RACER

45 Kit Bag I1, K

x6
NP0187
3x10NKD

x2
NP0191
3x10NPD

x2
NP0082

45 Assembly Of The Stone Guard

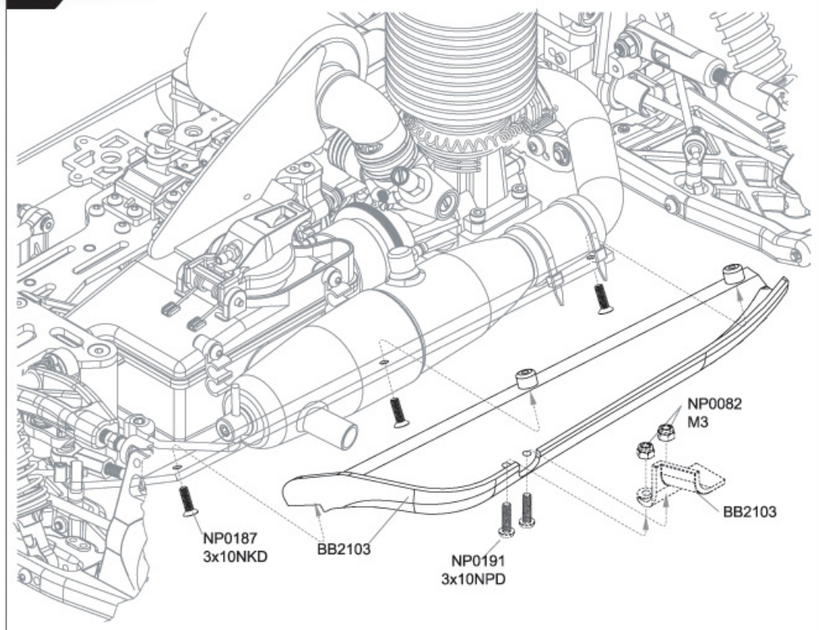

46 Kit Bag I, I1

x1
NP0177
3x12NPD

46 Assembly Of The Flue/Pressure Pipe

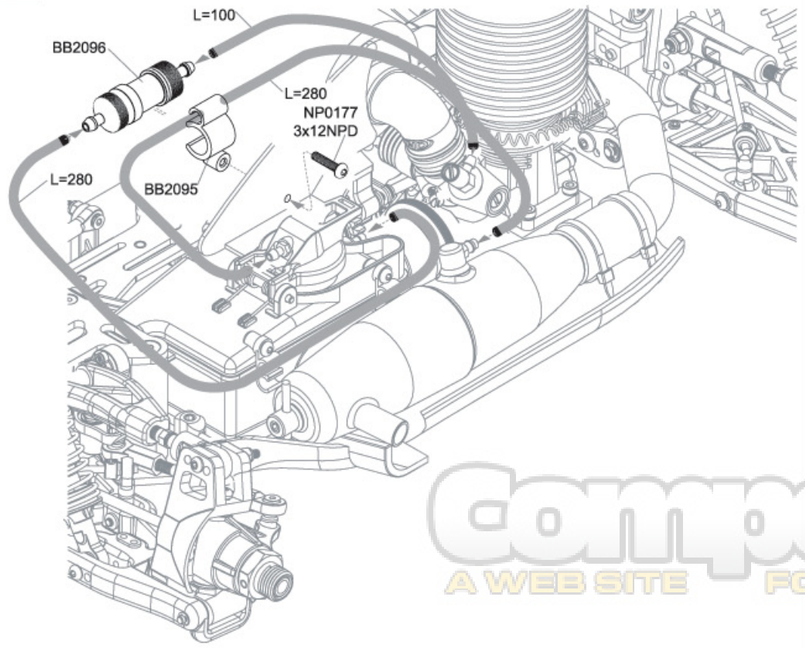

47 Kit Bag

47 Assembly Of The Tires And Wheels

x4

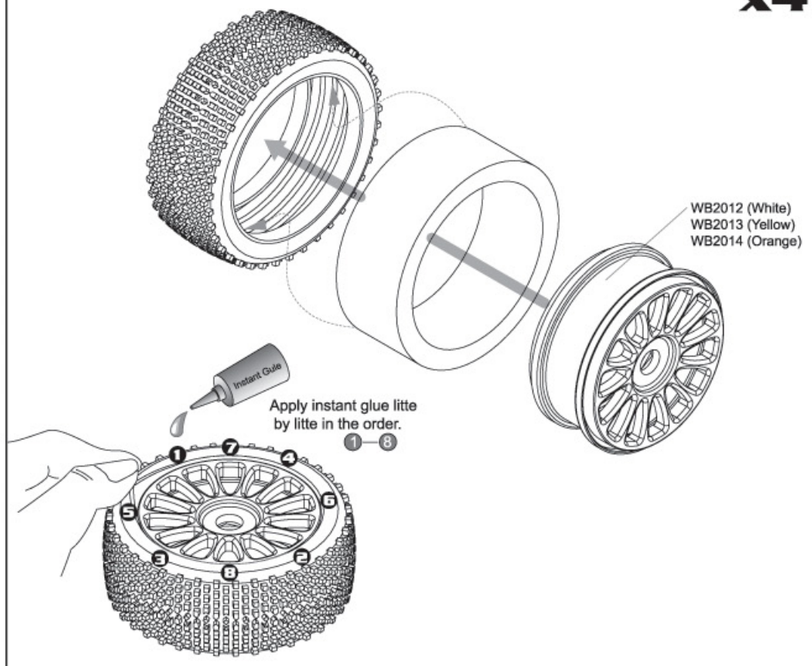

48 Kit Bag D2, C2

x4
NP0200
0.2x8.1x10

x4
BB2042

48 Assembly Of The Tires onto Knuckle and Hub

L/R

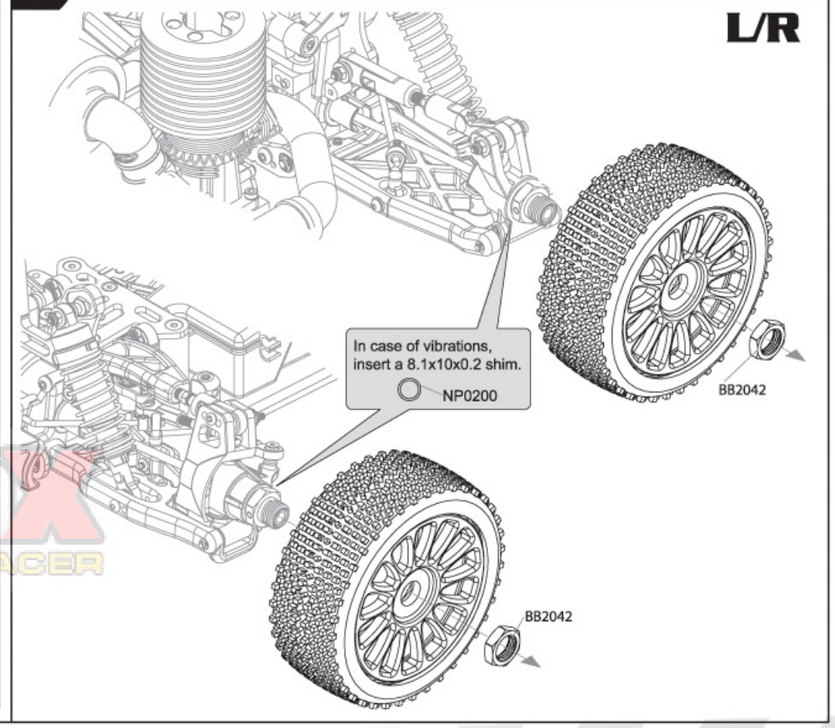

Competition
A WEB SITE FOR THE SERIOUS RACER

NANDA NRB-3 INSTRUCTION MANUAL (BB1005F004)
12.20.2006 10:02:46 Uhr

49 Kit Bag

50 Kit Bag L,G2

WT0040 x2

NP0191
3x12NPD x2

49 Assembly Of The Body Shell Painting

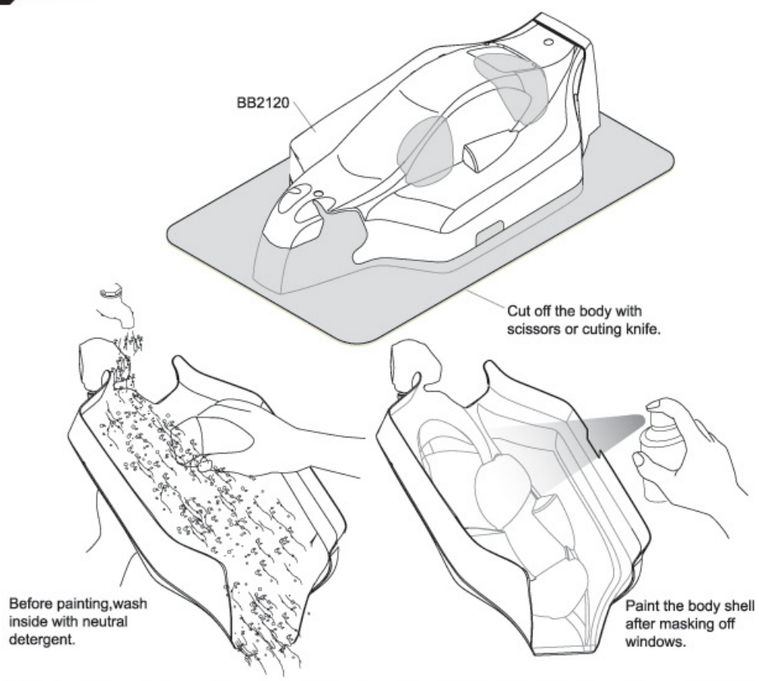

50 Assembly Of The Body and Wing

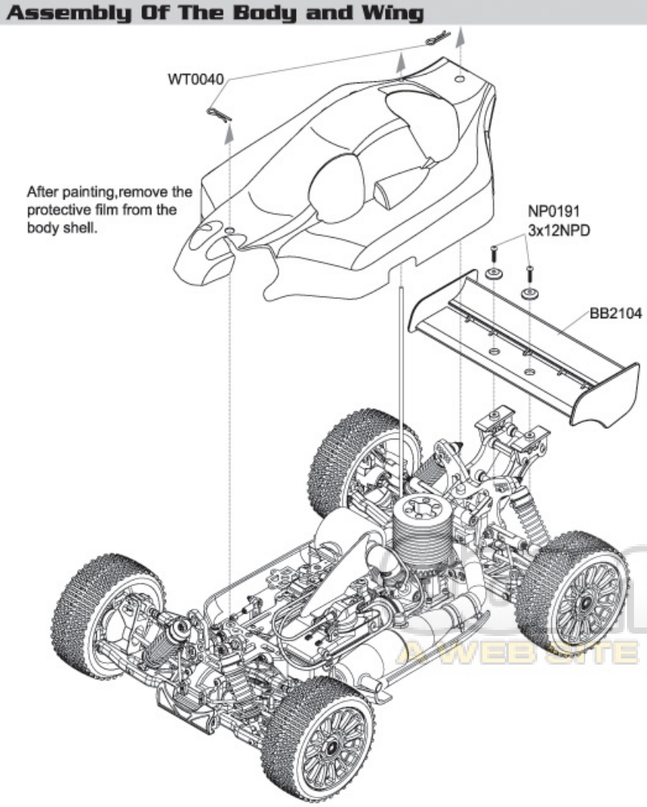

Kit Bag Details

Kit Bag-A

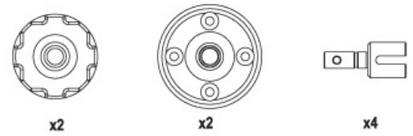

Kit Bag-A1

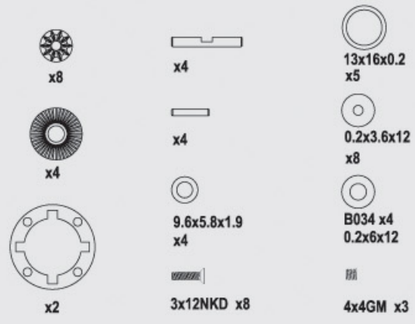

Kit Bag-E

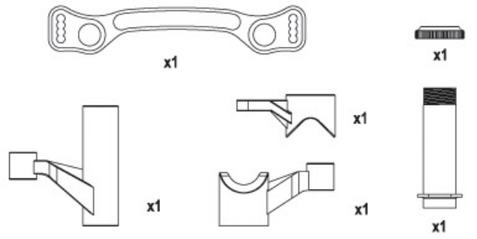

Kit Bag-E1

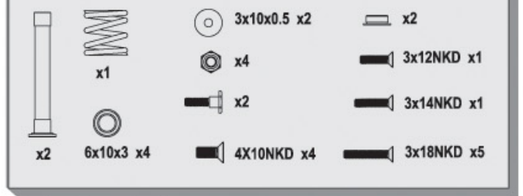

Kit Bag-E2

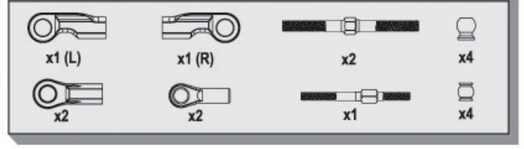

Kit Bag-B

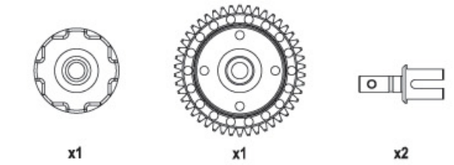

Kit Bag-B1

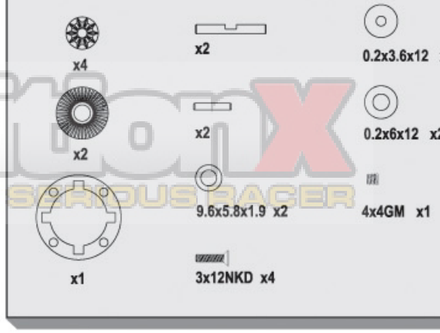

Kit Bag-F

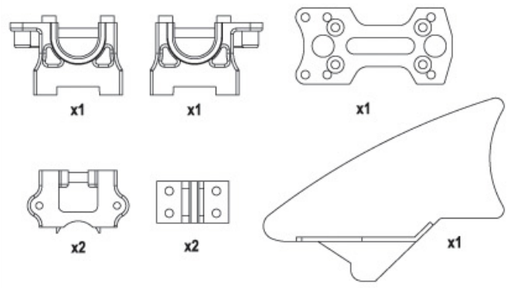

Kit Bag-F1

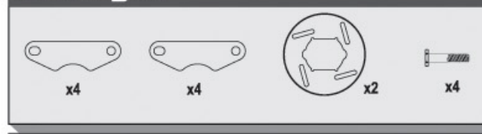

Kit Bag-F2

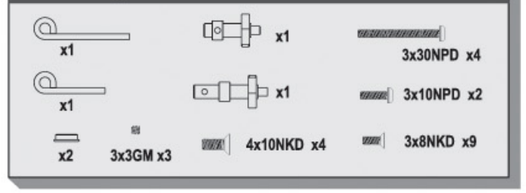

CompetitionX
A WEB SITE FOR THE SERIOUS RACER

NANDA NRB-3 INSTRUCTION MANUAL(BB100SF004)
12.20.2006 10:02:46 Uhr

Kit Bag Details

Kit Bag-C

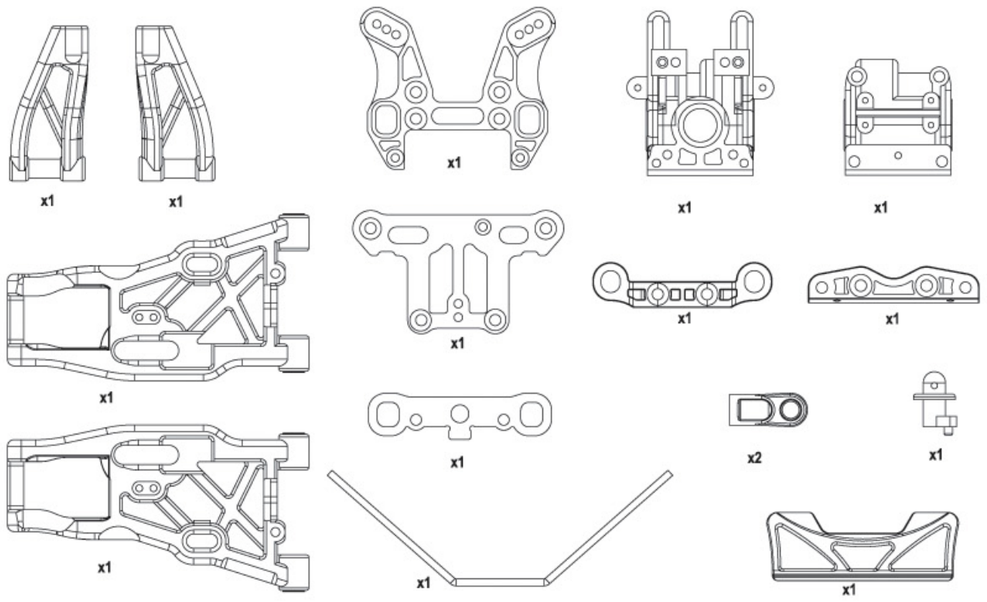

Kit Bag-C1

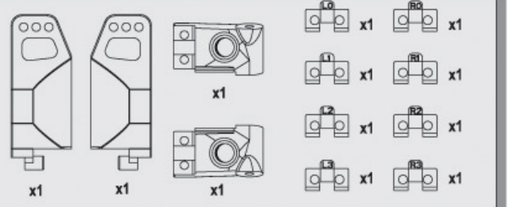

Kit Bag-C2

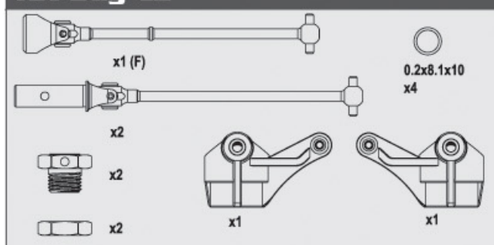

Kit Bag-C3

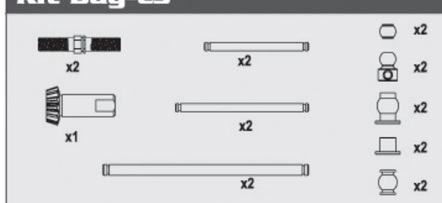

Kit Bag-C4

Kit Bag-C5

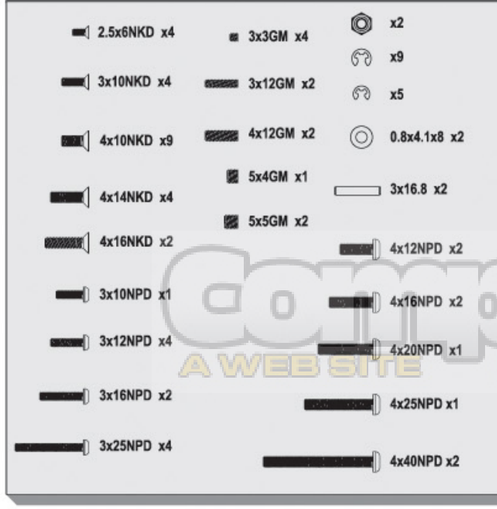

Kit Bag Details

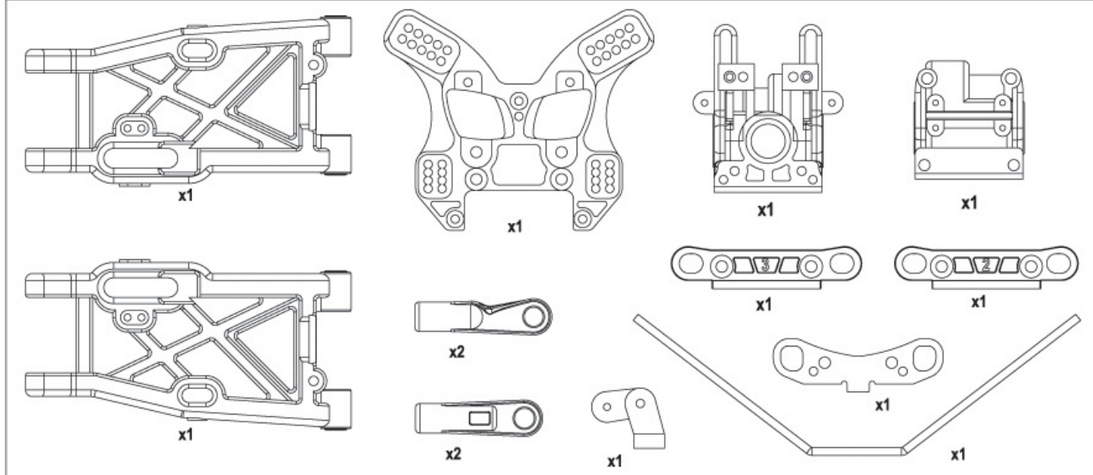

Kit Bag-D1

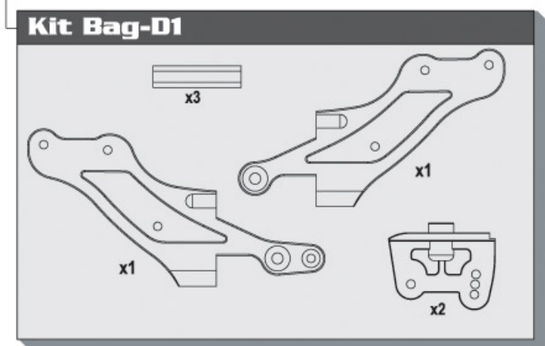

Kit Bag-D2

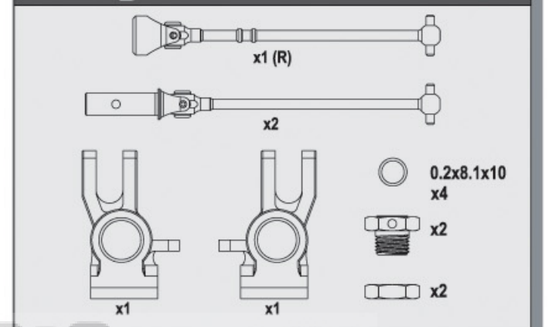

Kit Bag-D3

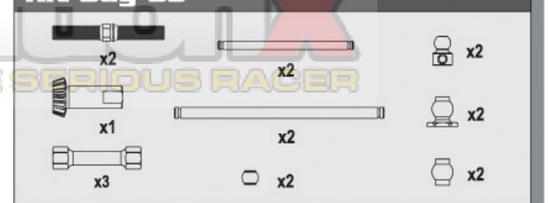

Kit Bag-D4

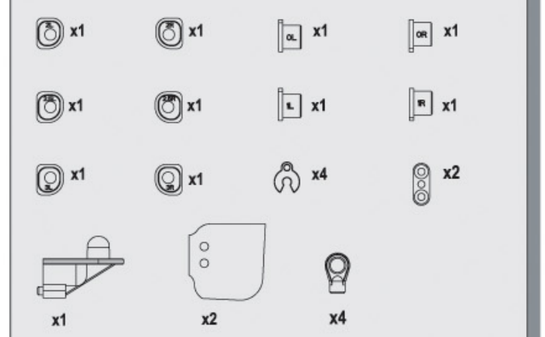

Kit Bag-D5

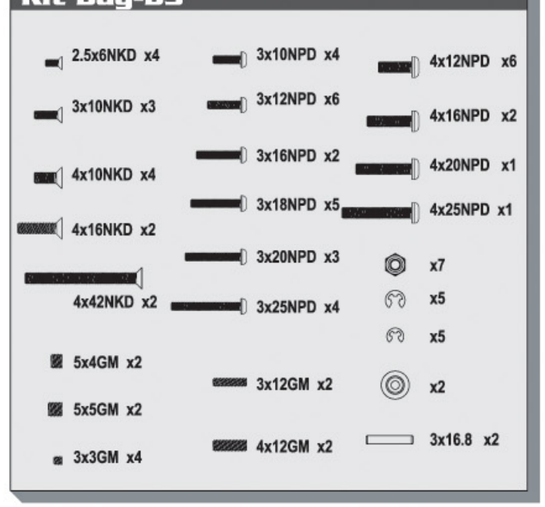

Competition
A WEB SITE FOR THE SERIOUS RACER

Kit Bag Details

Kit Bag-G

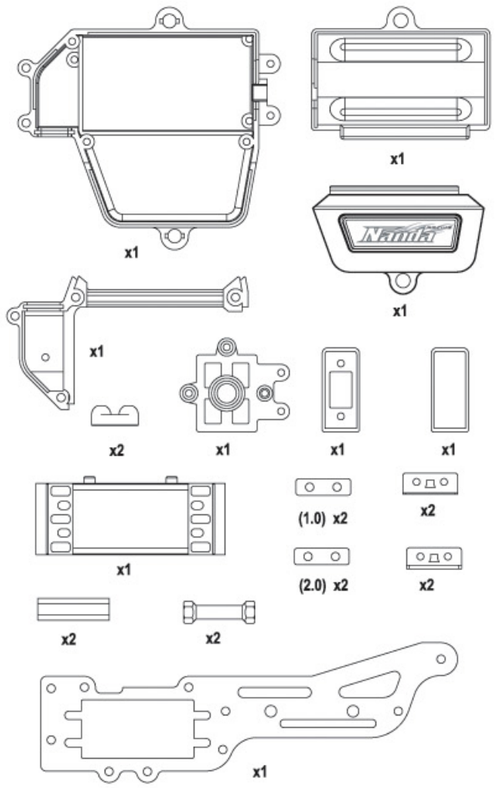

Kit Bag-G1

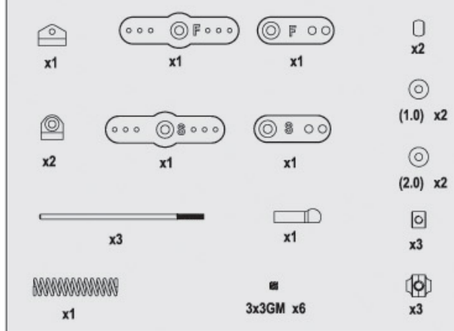

Kit Bag-G2

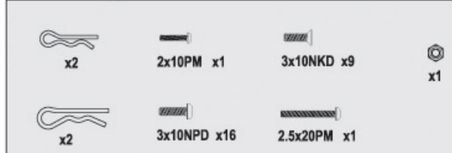

Kit Bag-H

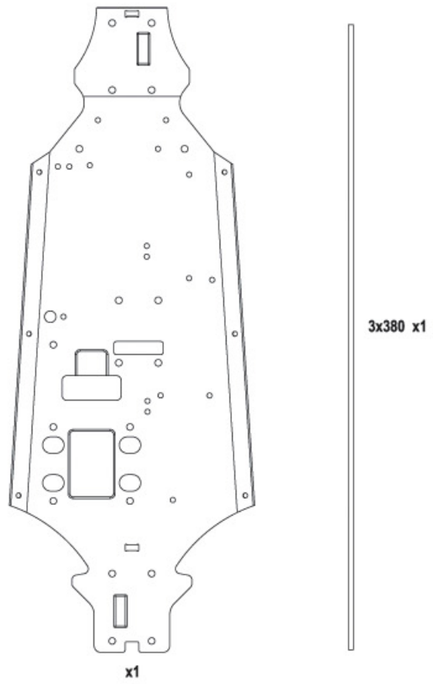

Kit Bag-I

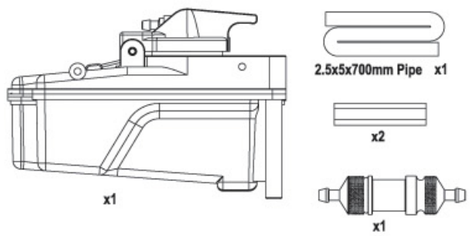

Kit Bag-I1

Kit Bag Details

Kit Bag-J

Kit Bag-J1

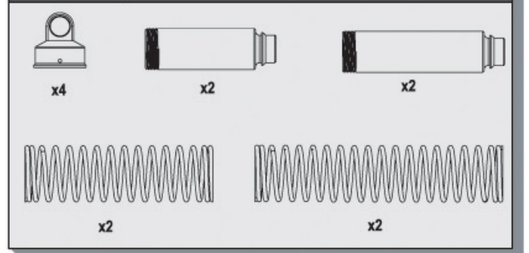

Kit Bag-J2

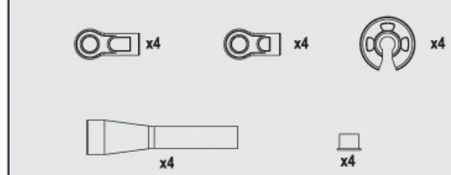

Kit Bag-J3

Kit Bag-J4

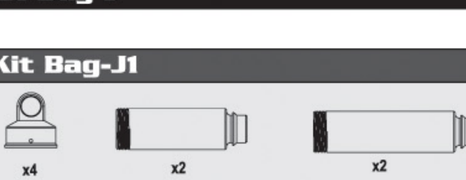

Kit Bag-J5

Kit Bag-K

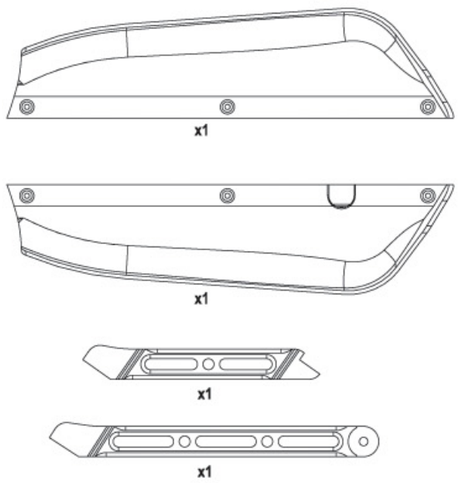

Kit Bag-L

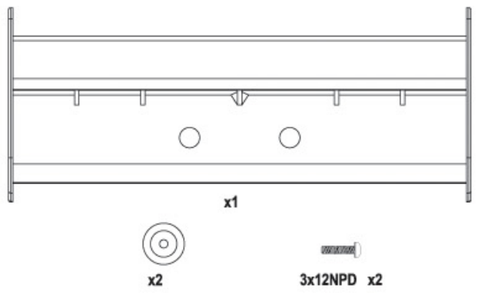

Kit Bag-P

competitionX
A WEB SITE FOR THE SERIOUS RACER

NANDA NRB-3 INSTRUCTION MANUAL (BB1005F004)
12.20.2006 10:02:46 Uhr

Kit Bag Details

Kit Bag-M

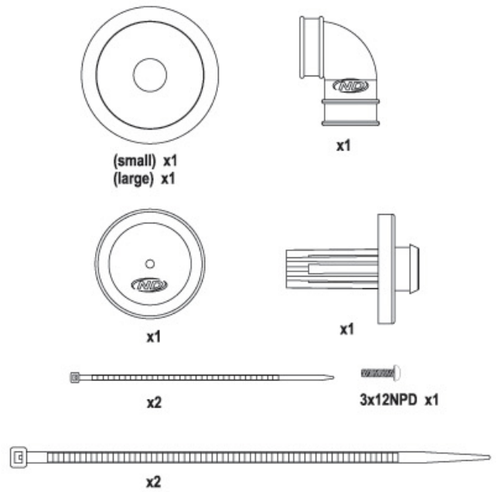

Kit Bag-Q

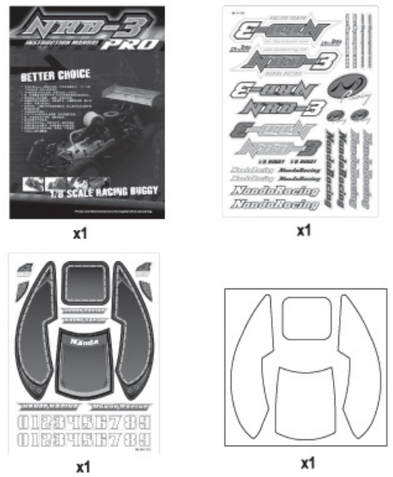

Kit Bag-M1

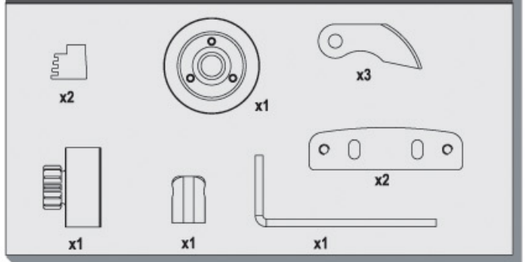

Kit Bag-M2

Kit Bag-N

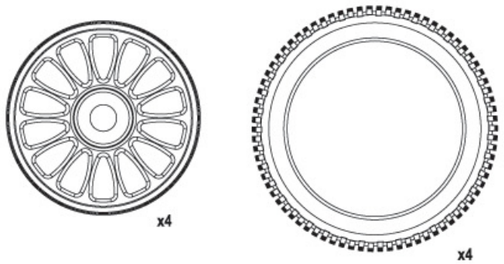

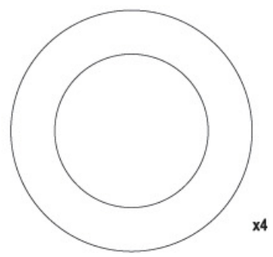

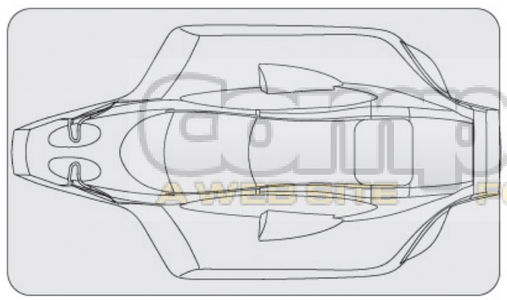

NOTE:

CompetitionX
A WEB SITE FOR THE SERIOUS RACER