RACERS EDGE

Instruction Manual

SWITCH BACK

ELECTRIC OFF-ROAD BUGGY

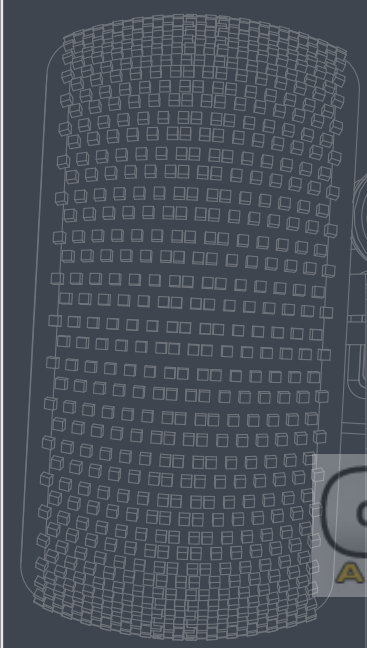

1:10 Scale Radio Controlled
Electric Powered 2WD Racing Buggy

Caution

Please read the following manual closely and familiarize yourself with its contents before operating the model. Keep the manual in a safe place for future reference for repairs, part numbers and assembly instructions.

This product is not a toy and intended for ages 14 and up. Adult supervision is required for ages under 18 years old. Contains small parts, keep out of reach of children 3 years and younger.

DO NOT operate this model in the rain, on public streets, near crowds, airports or anywhere where it will be deemed a hazard to anyone or anything. Do not run the model into yourself, others or animals while operating or possible injury may occur. Serious accidents, personal injury and property damage may occur.

Use proper rechargeable batteries intended for RC applications only. Follow manufacturers guidelines for charging batteries properly.

Motor and speed control can become very hot after use, please handle with care.

Be aware of all moving parts of the vehicle so no injuries occur.

Always unplug the battery after use. DO NOT leave your car unattended with the battery plugged in and do not store the battery in the vehicle. Always store batteries and models in a cool dry place.

Electronic Speed Controller Instructions

Operating Instructions:

- **Place the model on a car stand or something that holds all 4 wheels off the ground. Turn on the ESC.**
- **Right after powering up the ESC will denote a series of beeps denoting the neutral setting of the transmitter. A second beeping sound denotes the success of neutral setup. If you do not hear the second set of beeps power the esc down, then the transmitter and begin again.**
- **Adjust & make sure the Throttle forward direction coincides with the ESC forward direction. With the wheels of the model off the ground safely push the throttle trigger forward to start motor running, push the throttle trigger backwards & hold it. If the system keeps braking, the throttle forward direction coincides with the ESC forward direction. Otherwise, if the system only has brief braking then the motor begins reverse operation, the throttle and ESC forward directions do not coincide with each other. In this case you can adjust the throttle reversing switch on the transmitter. First change the switch for the throttle direction then turn the ESCoff and back on again to reset. If the motor is operating in the wrong direction compared to the throttle inputs switch any two motor wires while the ESC is turned off.**

Precautions

- **Do not reverse the battery wire connections! Reversing the battery polarity will permanently damage the ESC.**
- **Once the battery pack is connected, handle the model with extreme care, making sure you are clear of all rotating parts.**
- **Be sure to turn off the ESC power before turning off the transmitter.**
- **Connect the battery pack just before driving and disconnect it immediately after your done. Never leave battery packs plugged into your model during storage; batteries should not be stored in your model ever.**
- **Always make sure you are connecting the ESC to a proper power source that has the correct voltage & polarity. Input voltage: 7.2V-8.4V(Ni-cd & Ni-MH) 7.4V(Li-po) only. Any higher voltage will cause permanent damage and will void the warranty!**
- **Incorrect voltages or reversed polarity will damage the ESC.**
- **Avoid touching ESC heat sink or motor casing right after operation due to high temperatures and the risk of burning your hands.**
- **Water and electronics don't mix! Never let water or any other debris on or inside of the ESC or motor. Any issue related to ESC failure due to water voids the warranty.**
- **Always maintain wiring away from rotating parts that can cause damage or wear wiring over time. Cover any exposed wires using heat shrink.**

Gear Selection

- **It is very important not to overheat the ESC or motor. When adjusting gear ratios always test both the ESC and motor temperature after running for 2-3 minutes. It is very important not to heat the motor or speed control over 180 degrees Fahrenheit. Doing so will decrease performance and could ruin your electronics.**
- **Forward operation includes brakes while throttle is at more than 25% input. Slower than 25% will begin reverse operation. Reverse will also begin from a standstill.**

Trouble-shooting

Steering Channel Works But Motor Will Not Run

- **Check input plug wiring connections at ESC and receiver.**
- **Check motor connections. Possible internal motor damage.**
- **Check vehicle's drive train for free operation.**
- **Possible ESC thermal shutdown–Check gear ratio & free operation of drive train for possible overheating/ESC is being severely overheated–allow system to cool & return throttle to neutral position to regain motor control.**
- **Possible receiver failure–Check operation with a different receiver.**
- **Possible internal damage—Refer to Service Procedures.**

Receiver Glitches/Throttle Stutters During Acceleration

- **Receiver or antenna too close to ESC, power wires, battery, or motor.**
- **Bad connections–Check wiring & connectors.**
- **Low voltage to receiver—Try Glitch Buster capacitor on receiver.**
- **External Power Capacitor damaged/not installed—Replace Power Capacitor.**
- **Battery pack damaged or weak—Try a different battery pack.**
- **Motor's magnet has weakened or overheated—Replace rotor.**

Motor and Steering Servo Do Not Work

- **Check wires, receiver signal harness wiring & color sequence, radio system, crystals, battery/motor connectors, & battery pack.**
- **Power wires too close to signal wires—Do not bundle power & signal wires together.**
- **Possible receiver failure–Check operation with a different receiver.**
- **Possible internal damage—Refer to Service Procedures.**

Brushless Motor Runs Backwards

- **Switch any two motor wires while the ESC is turned off.**

Speed Control Runs Excessively Hot

- **Gear ratio too low—Increase gear ratio (see 'GEAR SELECTION').**

Model Runs Slowly/Slow Acceleration

- **Gear ratio too high—Reduce gear ratio (see 'GEAR SELECTION').**
- **Check battery & connectors—Try another battery; replace connectors/battery if needed.**
- **Incorrect transmitter/ESC adjustment—Refer to Step 4.**
- **External Power Capacitor damaged/not installed—Replace Power Capacitor.**

Tools required

Needle Nose Pliers

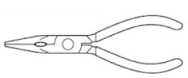

Awl

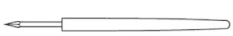

RCE3003
HD Grease

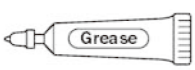

Thread Lock

RCE601
Fusion Tire Glue

RCE3004
Super Diff Lube

RCE3005
Black Grease

RCE7035
Body Reamer

Wire Cutters

RCE7045
Body Scissors

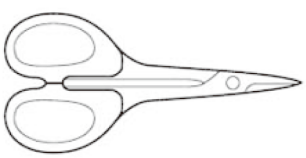

Hex Wrench

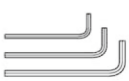

Box Wrench

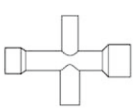

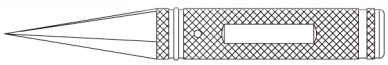

RCE17018
Hobby Knife

CompetitionX
A WEB SITE FOR THE SERIOUS RACER

Transmitter Preparation

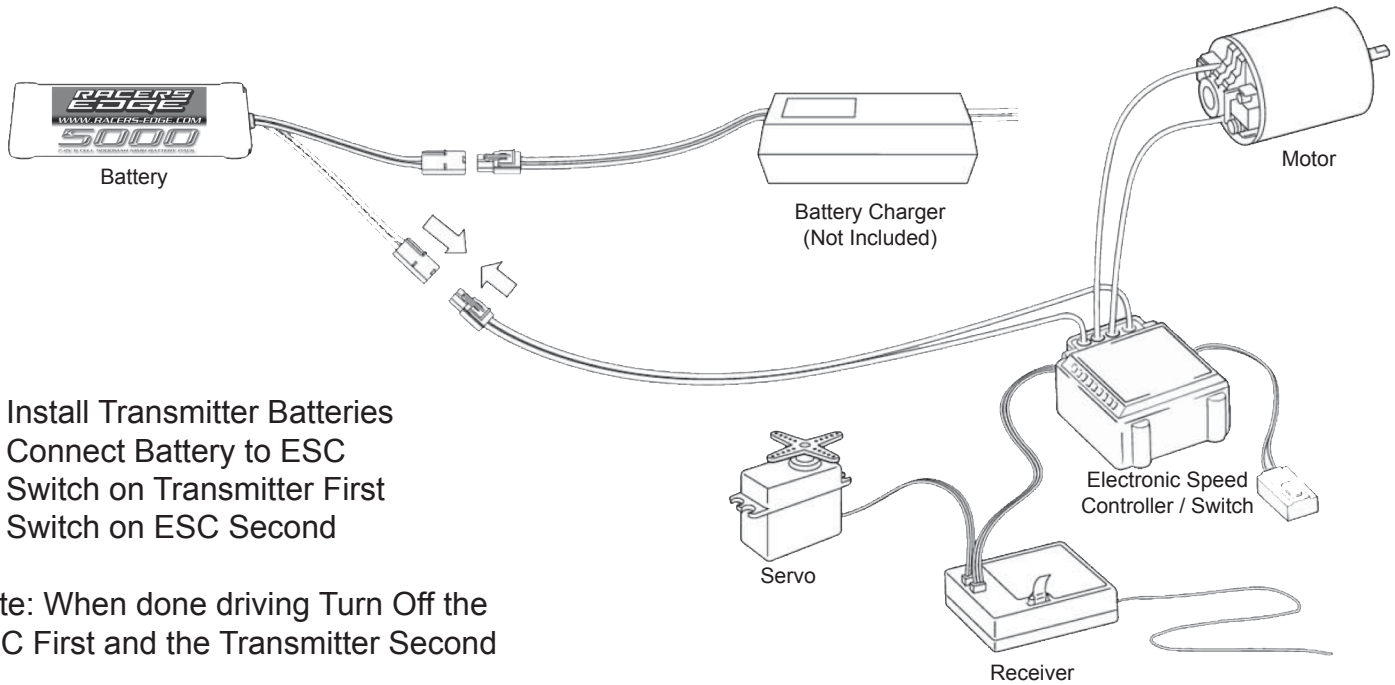

1. Install Transmitter Batteries
2. Connect Battery to ESC
3. Switch on Transmitter First
4. Switch on ESC Second

Note: When done driving Turn Off the ESC First and the Transmitter Second

Transmitter Controls

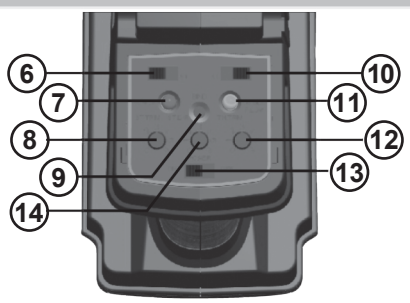

GLG20 2.4GHz

1	Control Panel
2	Steering Wheel
3	Throttle Trigger
4	Battery Compartment
5	Charging Jack
6	Sterring Servo Reverse
7	Power LED
8	Steering Trim
9	Bind Button
10	Throttle Servo Reverse
11	Battery Voltage
12	Steering Dual Rate
13	Power Switch
14	Throttle Trim

CompetitionX
A WEB SITE FOR THE SERIOUS RACER

1 Front Suspension

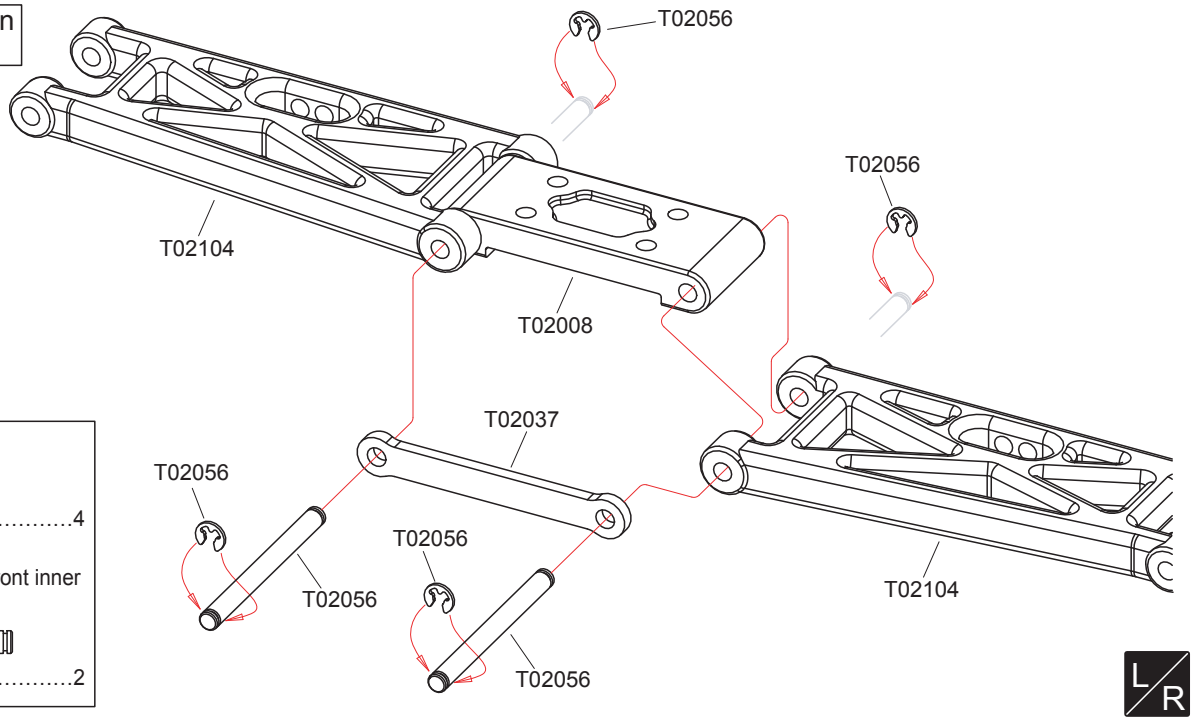

T02056 2.3 E-ring

.....4

T02056 3x34.5 Hinge pin front inner

.....2

2 Front Suspension

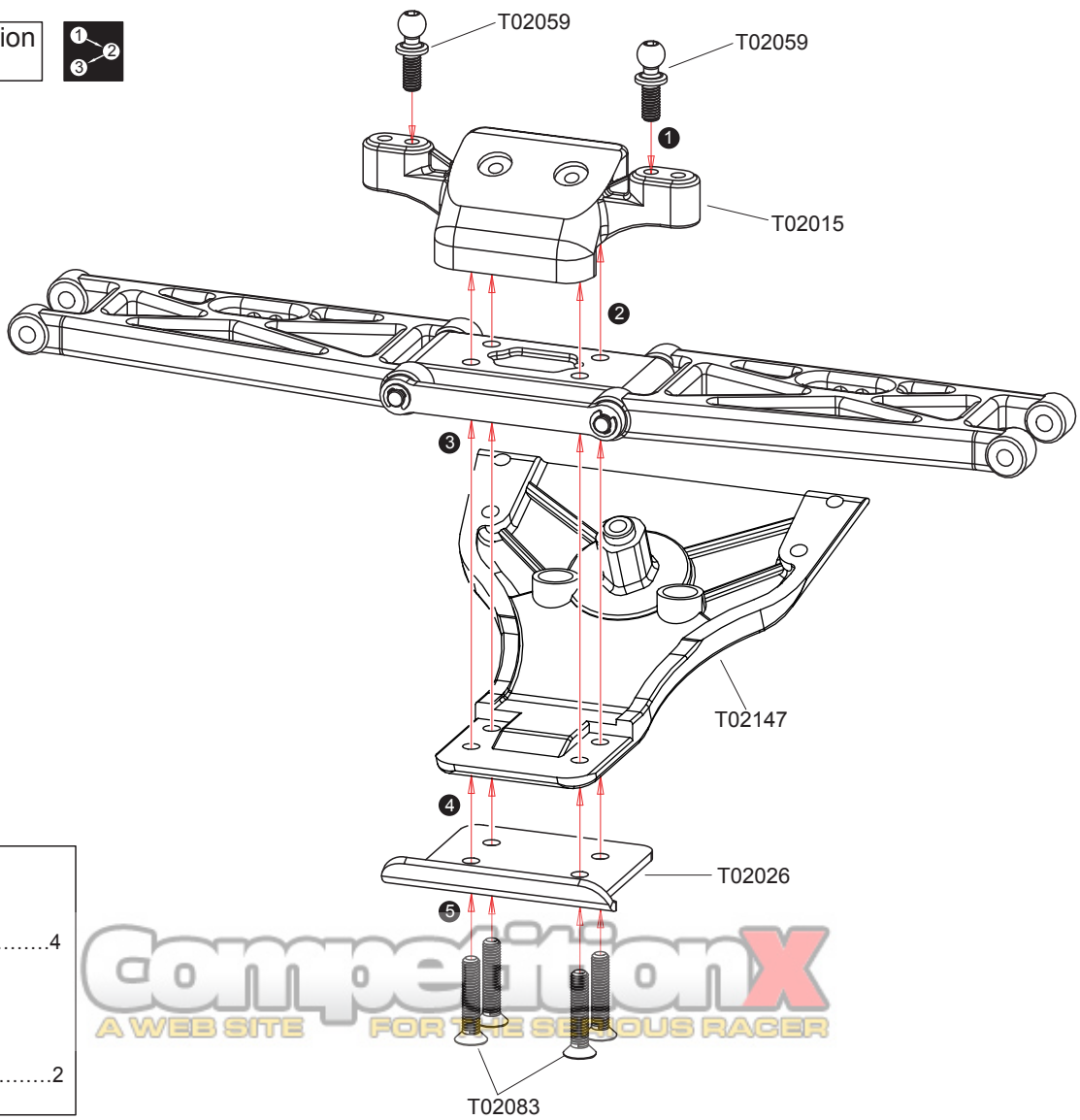

T02083 M3x15 Screw

.....4

T02059 Ball stud - long

.....2

CompetitionX
A WEB SITE FOR THE SERIOUS RACER

1

Assemble in the specified order

Assemble left and right sides the same way

3 Buffer

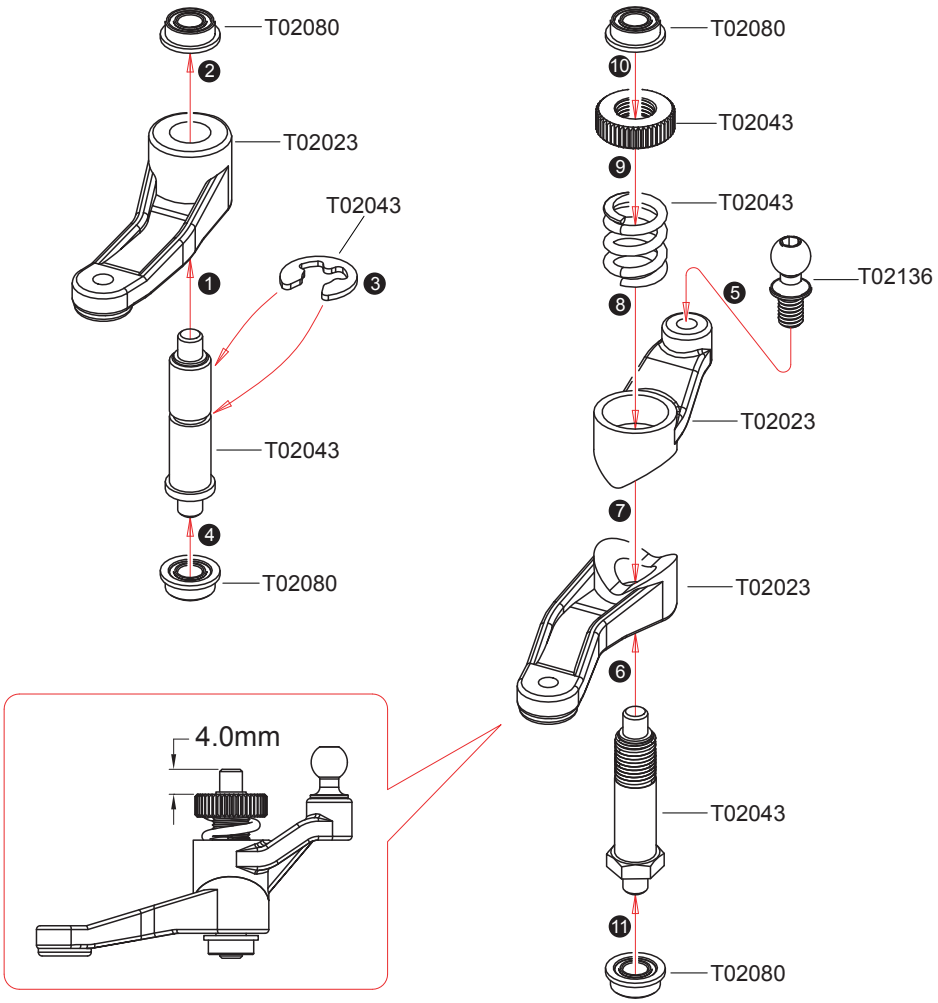

T02043 4.0 E-ring 1

T02080 3x6x2.5 Ball Bearing 4

T02136 Ball stud - silvery 1

4 Buffer

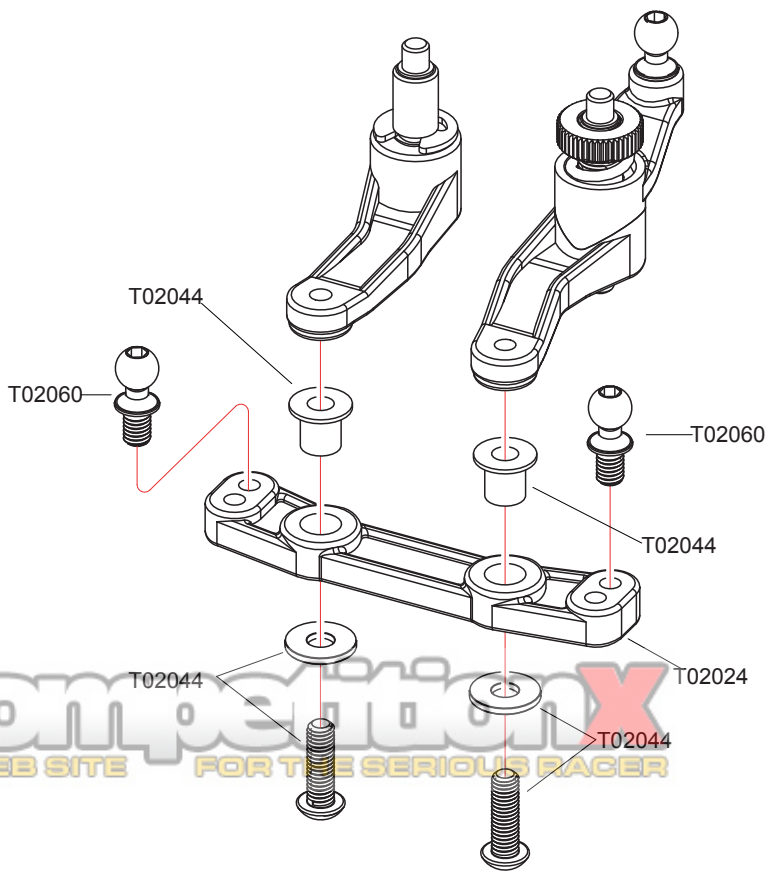

T02044 4.5x5.4 Block Carrier 2

T02044 M3x10 Screw 2

T02060 Ball stud - short 2

T02044 3x7x0.8 Washer 2

CompetitionX
A WEB SITE FOR THE SERIOUS RACER

Assemble in the specified order

5 Front Suspension

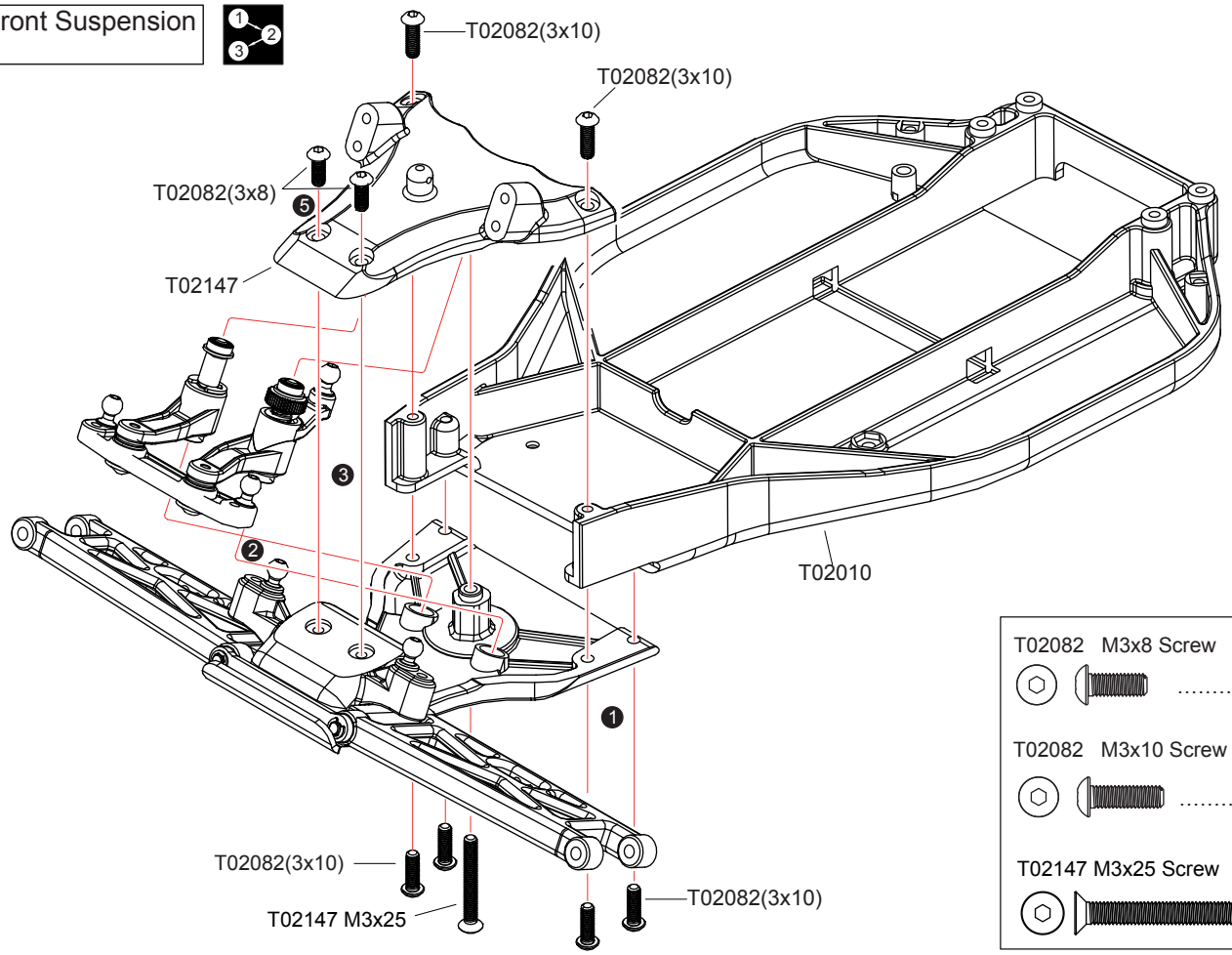

T02082 M3x8 Screw	2
T02082 M3x10 Screw	6
T02147 M3x25 Screw	1

6 Front Suspension

<Right>

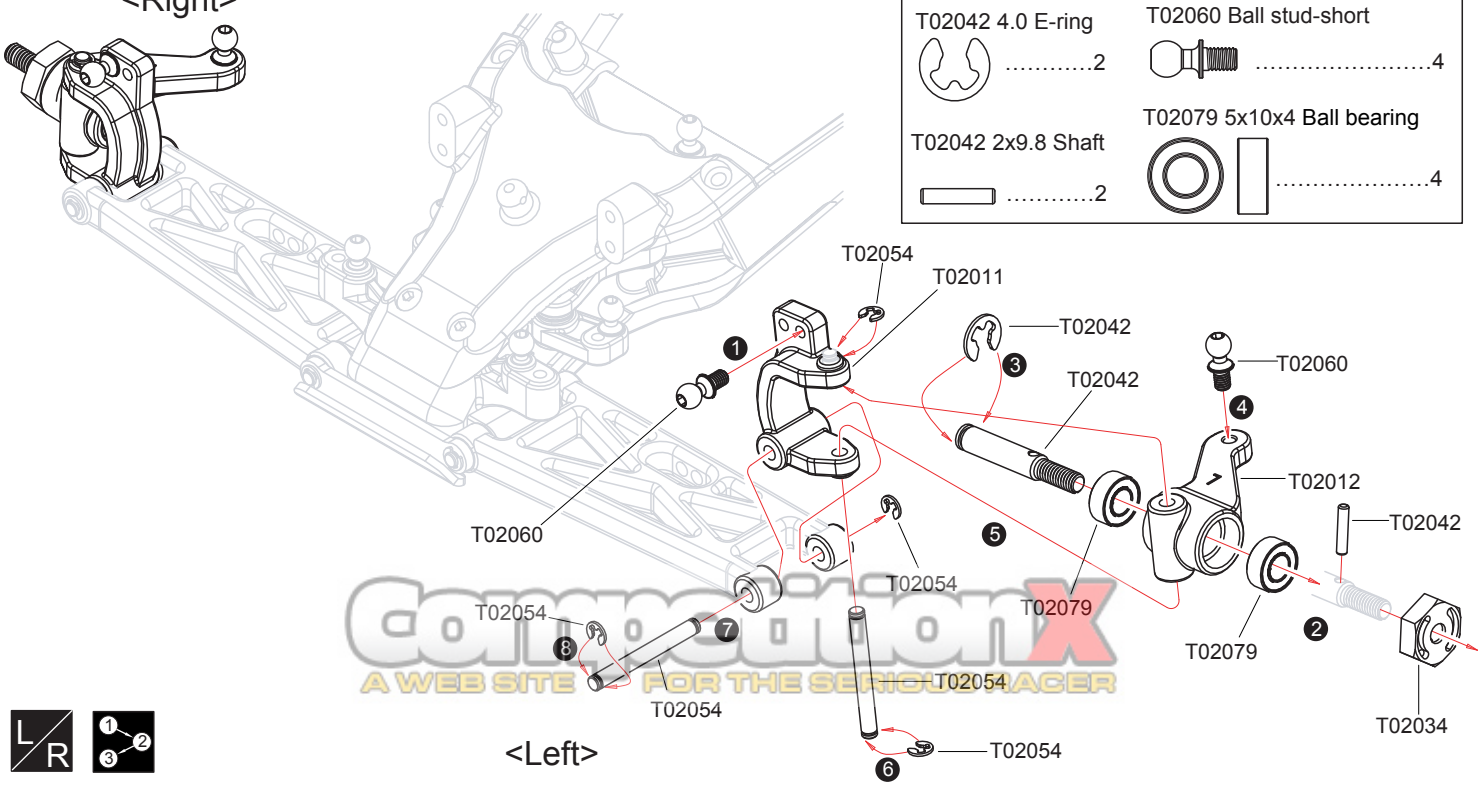

<Left>

T02054 2.3 E-ring	8
T02042 4.0 E-ring	2
T02042 2x9.8 Shaft	2
T02054 3x27.5 Hinge pin front outer	4
T02060 Ball stud-short	4
T02079 5x10x4 Ball bearing	4

CompetitionX
A WEB SITE FOR THE SERIOUS RACER

3

Assemble in the specified order

Assemble left and right sides the same way

7 Front Suspension

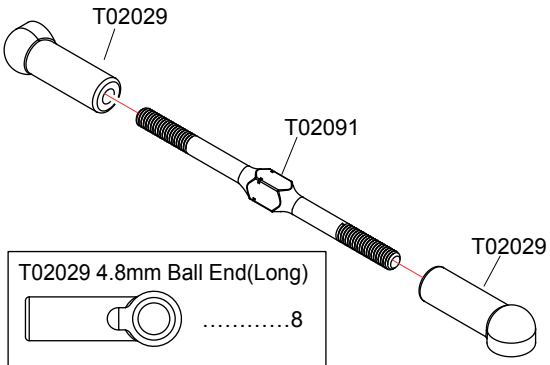

T02029 4.8mm Ball End(Long) 8

T02091 3x54 Turnbuckle 4

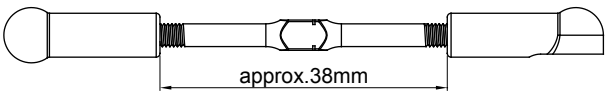

Front Upper(Right) x1 1:1

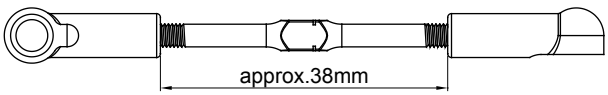

Front Upper (Left) x1 1:1

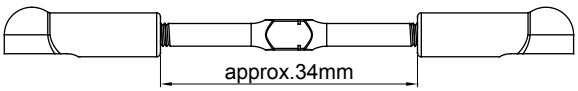

Steering Tip x2 1:1

8 Front Suspension

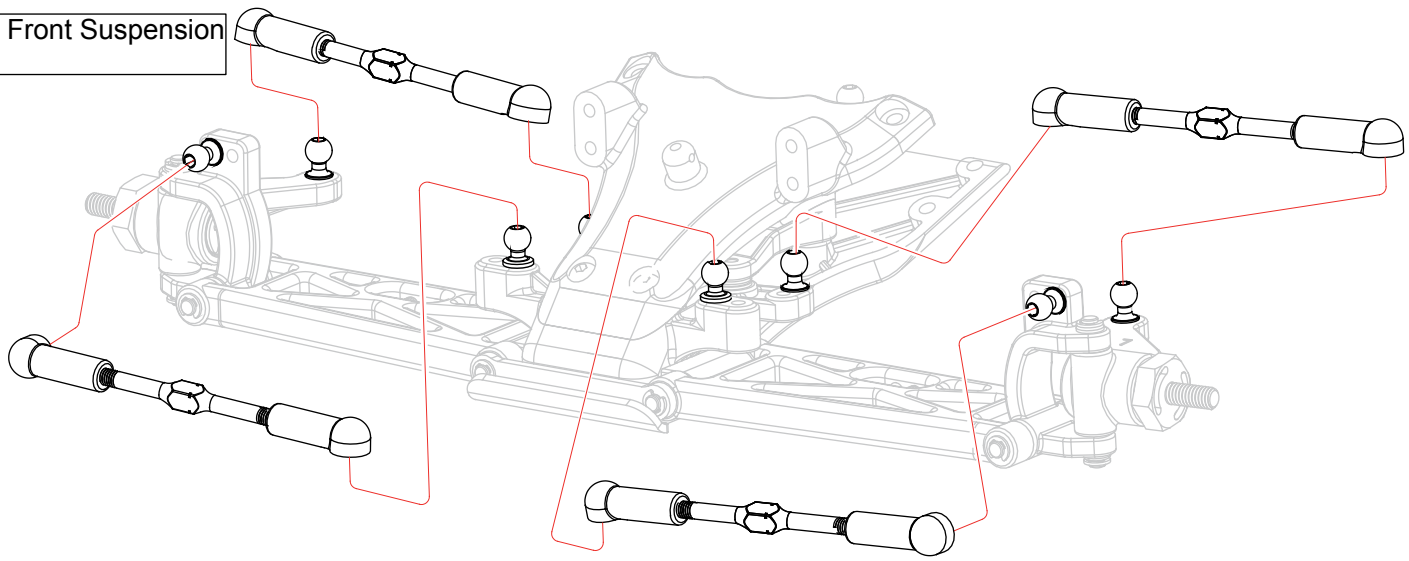

9 Front Suspension

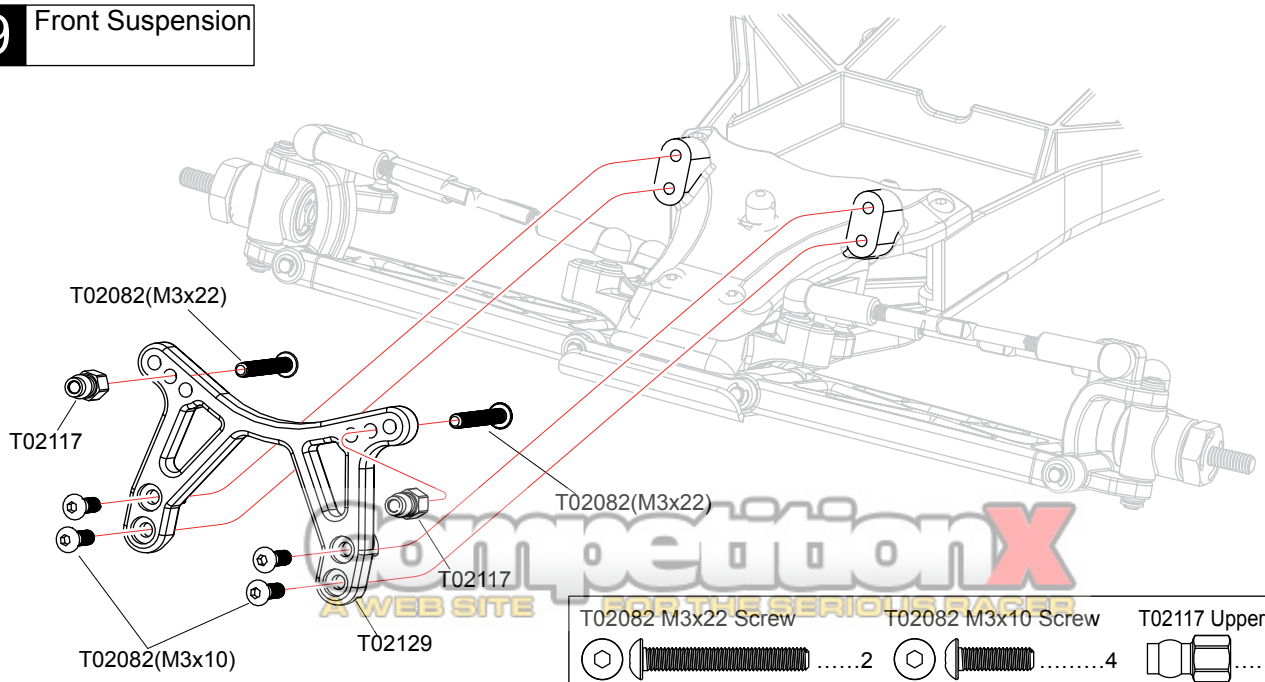

T02082 M3x22 Screw 2

T02082 M3x10 Screw 4

T02117 Upper Shock Bushing 2

x1 Assemble as many times as specified

1:1 Ture-to -scale diagram

10 Differential

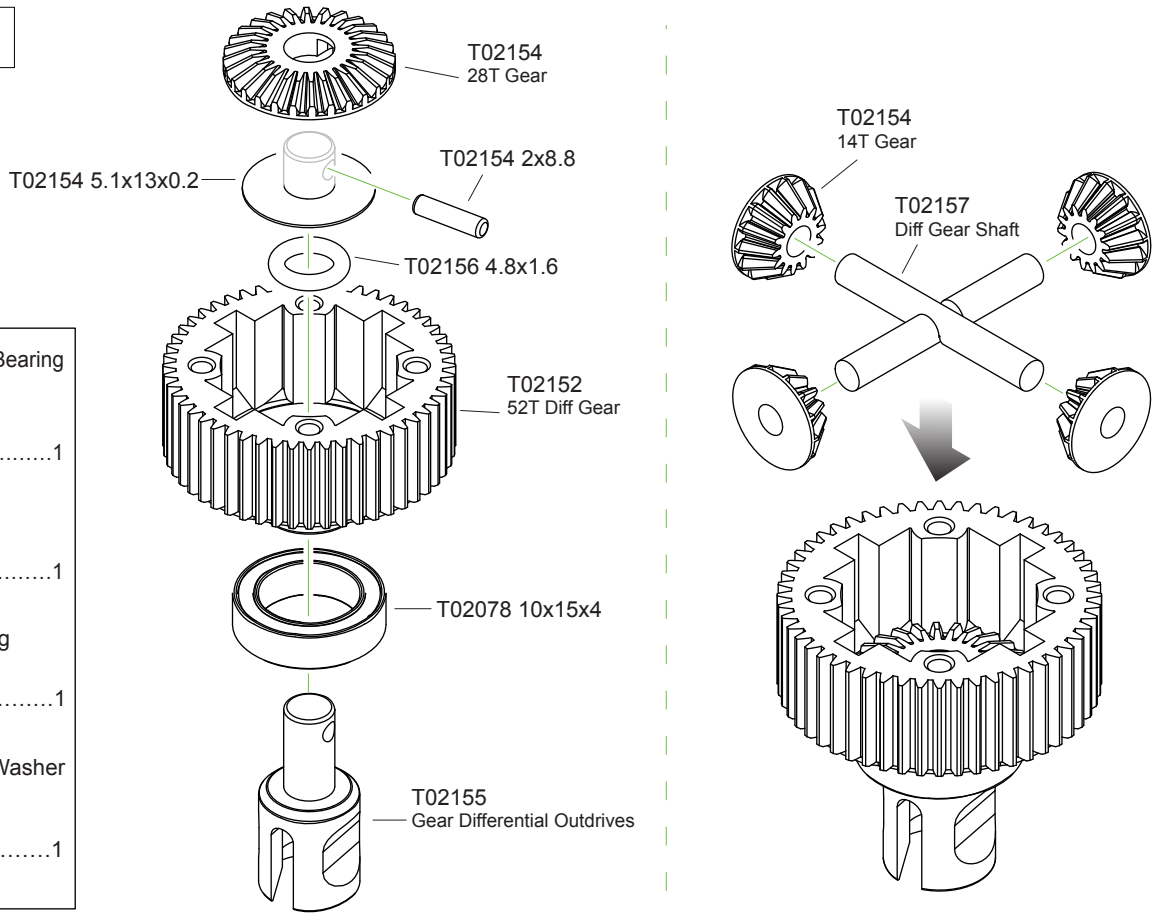

T02078 10x15x4 Ball Bearing 1

T02154 2x8.8 Pin 1

T02156 4.8x1.6 O-ring 1

T02154 5.1x13x0.2 Washer 1

11 Differential

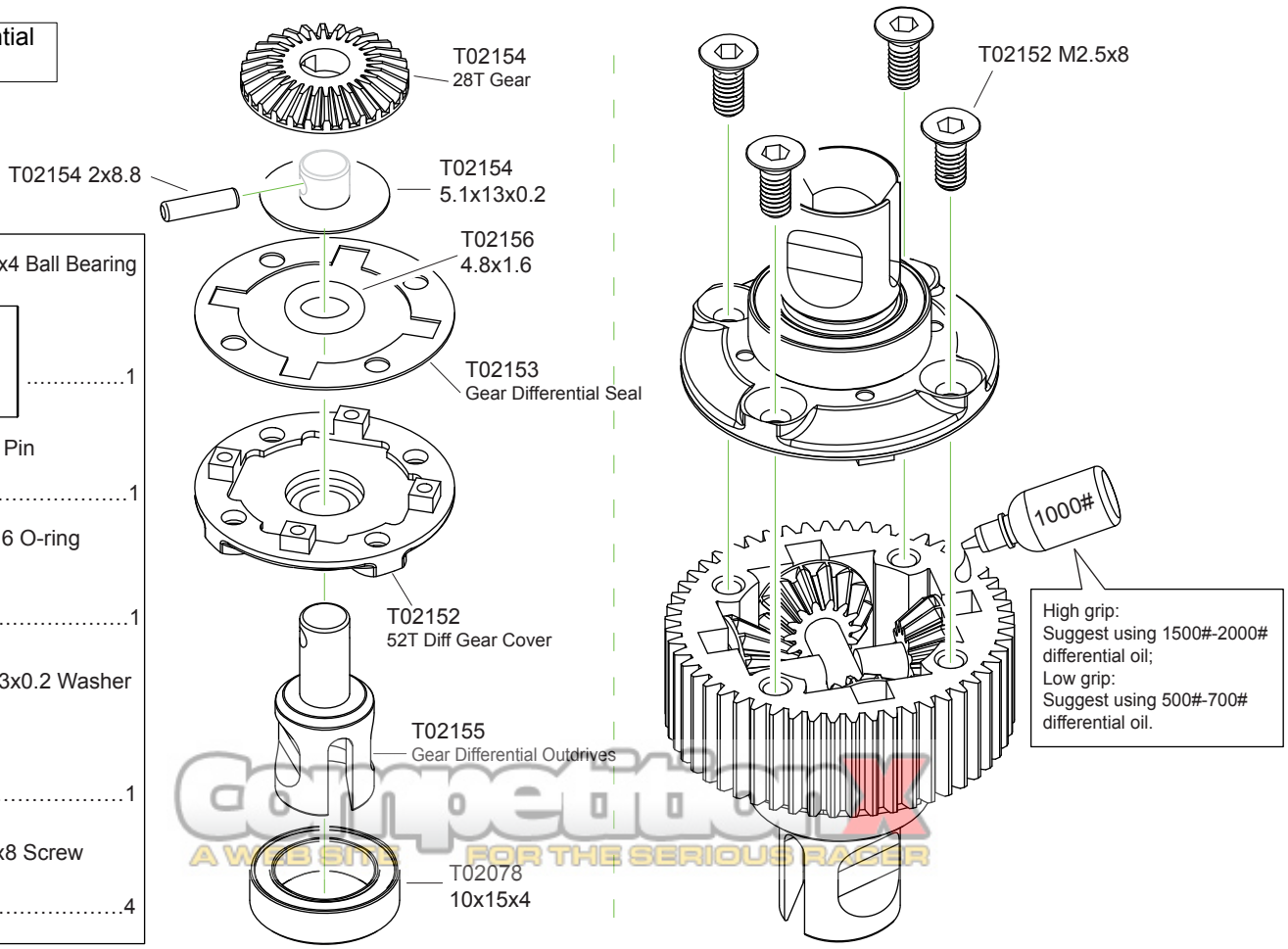

T02078 10x15x4 Ball Bearing 1

T02154 2x8.8 Pin 1

T02156 4.8x1.6 O-ring 1

T02154 5.1x13x0.2 Washer 1

T02152 M2.5x8 Screw 4

Competition X
A WEB SITE FOR THE SERIOUS RACER

12 Transmission

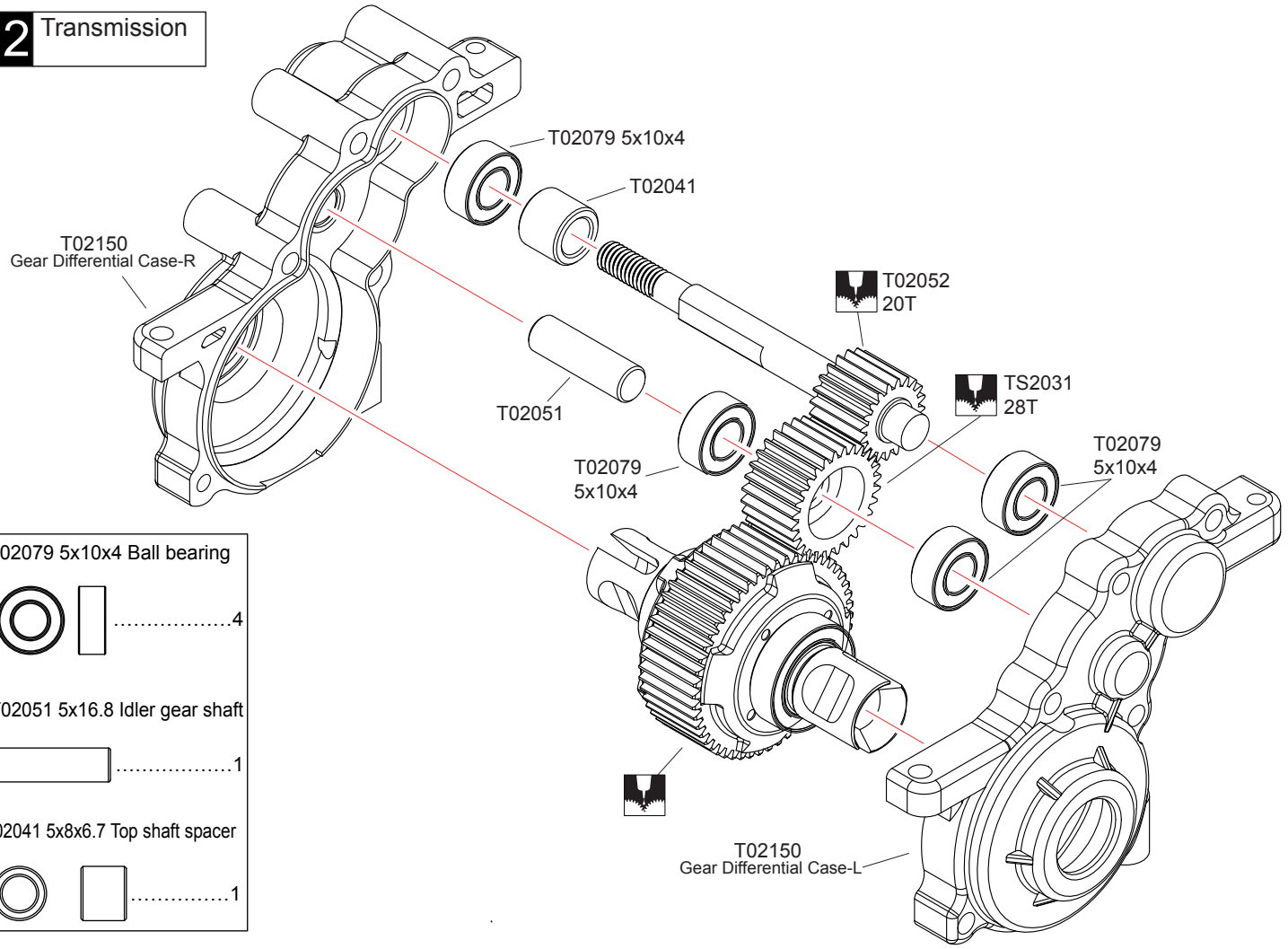

T02079 5x10x4 Ball bearing ……4

T02051 5x16.8 Idler gear shaft ……1

T02041 5x8x6.7 Top shaft spacer ……1

13 Motor mounts

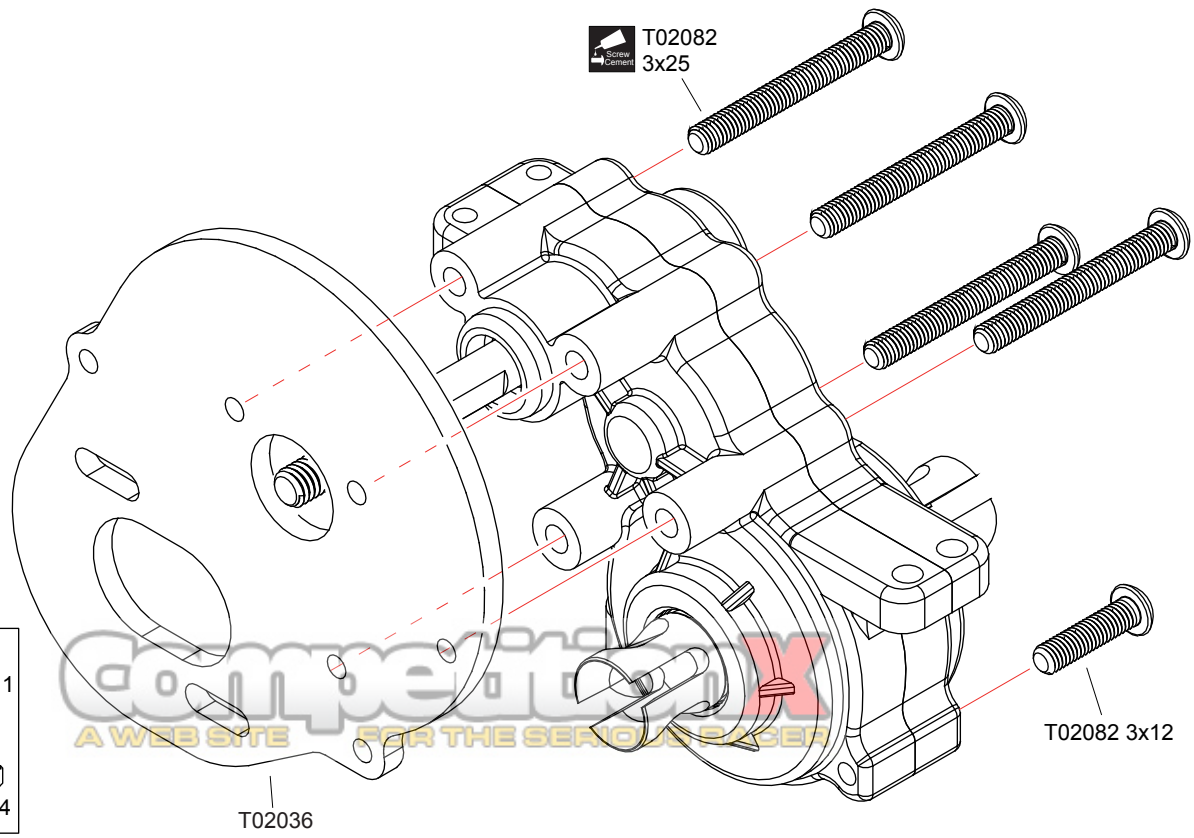

T02082 M3x12 Screw ……1

T02082 M3x25 Screw ……4

Competition RC
A WEB SITE FOR THE SERIOUS RACER

Apply grease Apply threadlocker(screw cement)

14 Main Gear

T02084 M4 Flanged Nylon Nut

.....1

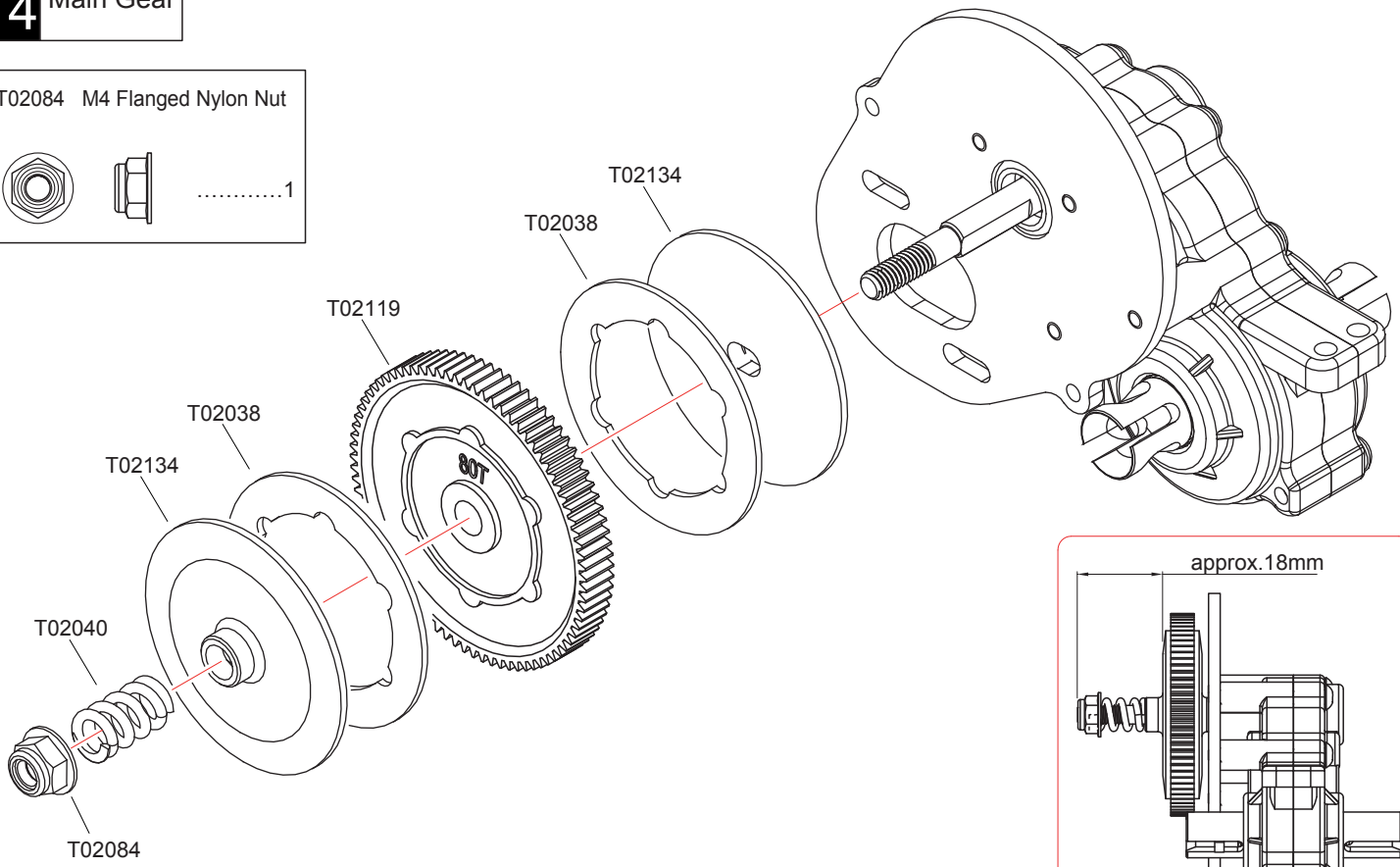

15 Rear Damper Tower

T02082 M3x10 Screw

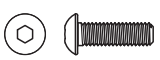

.....4

T02082 M3x22 Screw

.....2

T02117 Upper Shock Bushing

.....2

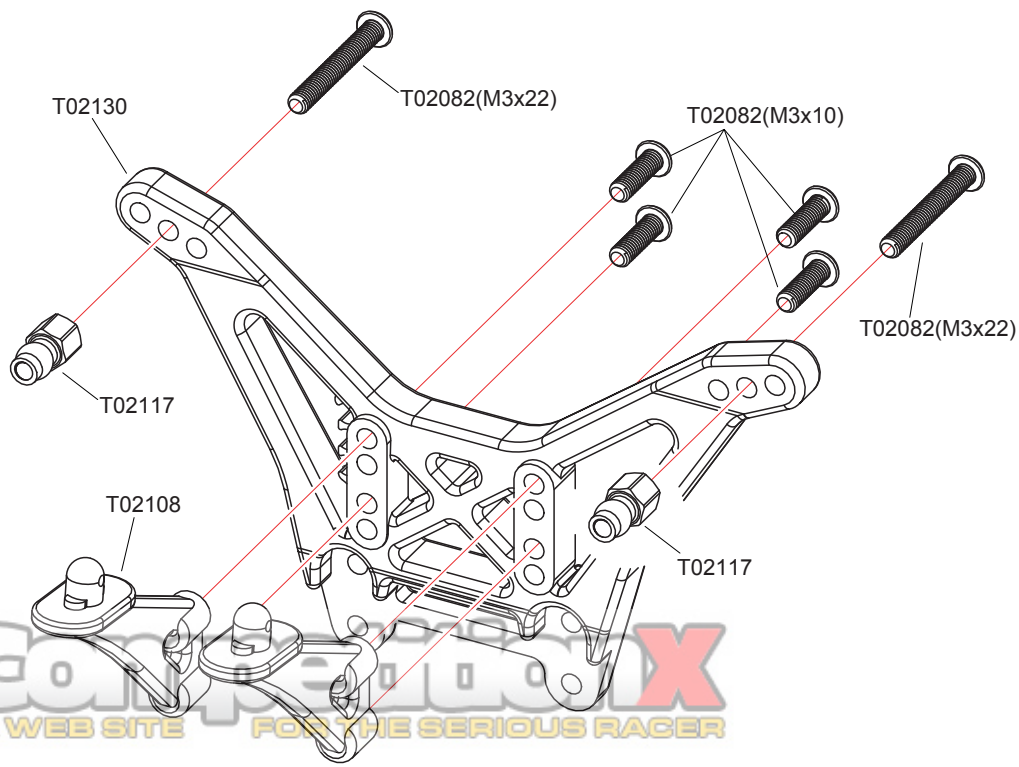

Competition X
A WEB SITE FOR THE SERIOUS RACER

16 Rear Bulkhead

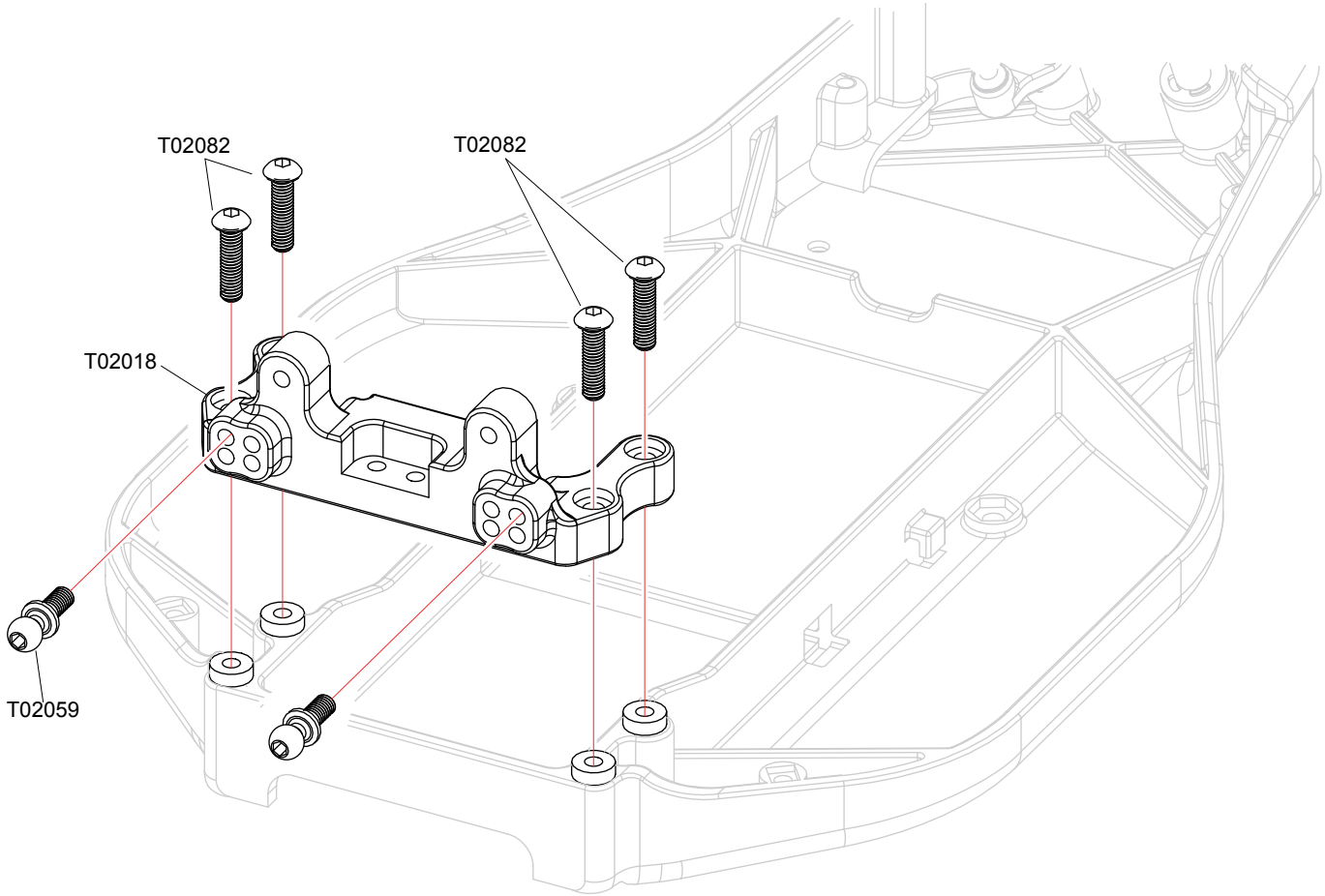

T02059 Ball stud - long	T02082 M3x10 Screw
.....2	4

17 Rear Chassis

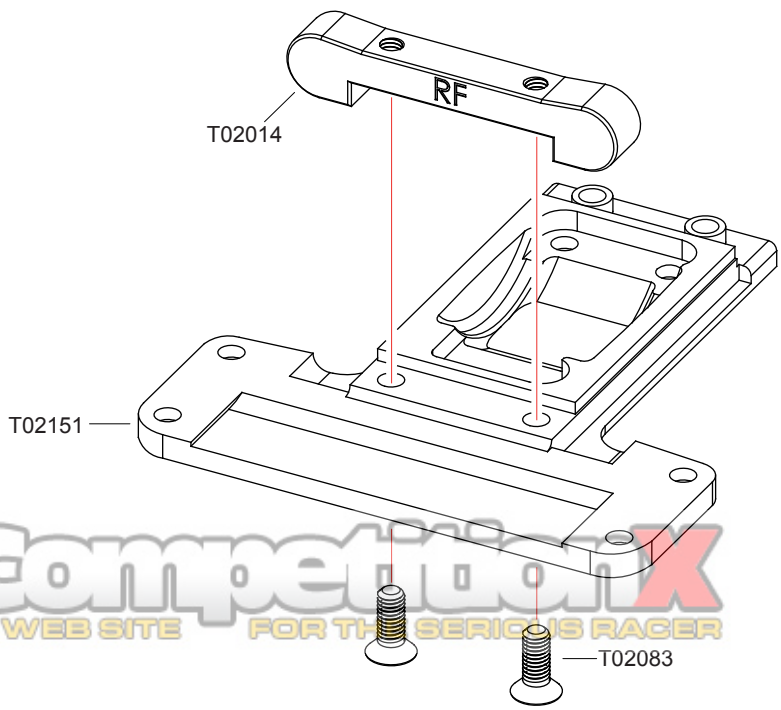

T02083 M3x8 Screw
.....2

CompetitionX
A WEB SITE FOR THE SERIOUS RACER

18 Rear Suspension

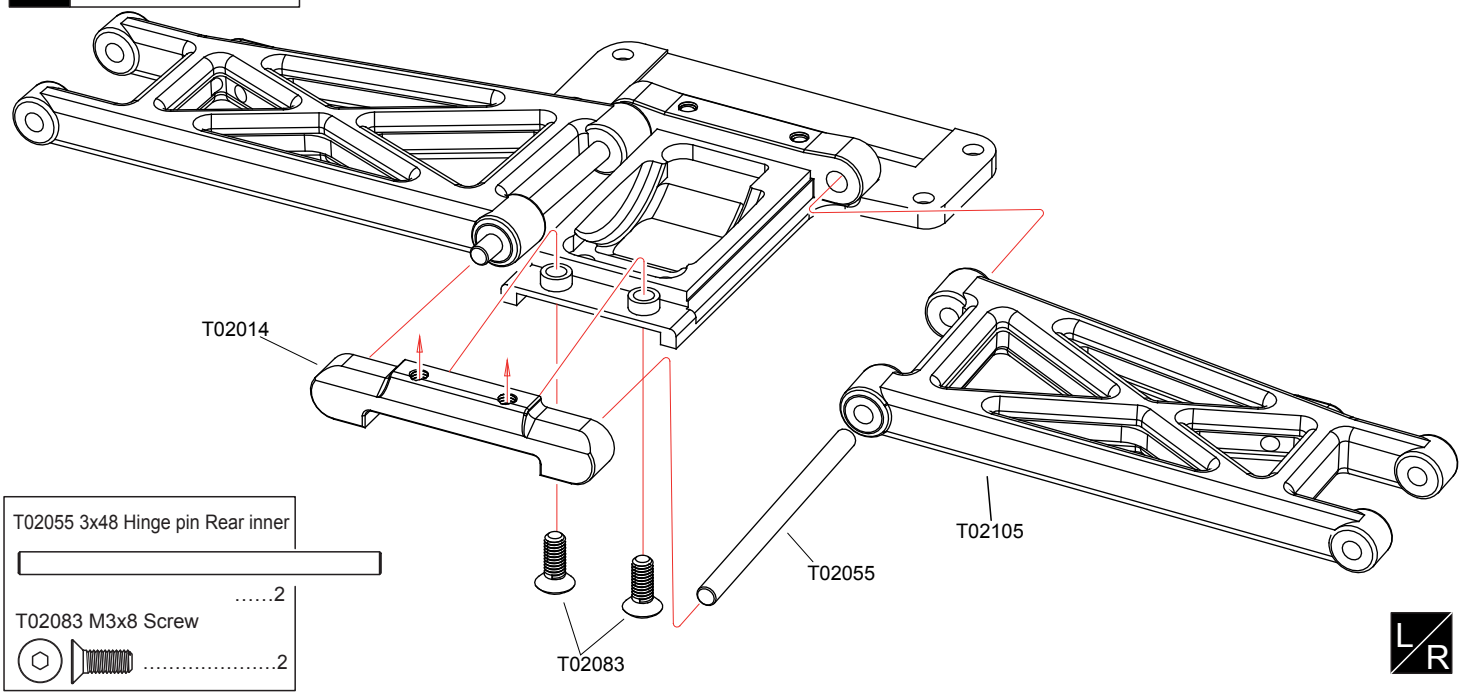

T02055 3x48 Hinge pin Rear inner ……2

T02083 M3x8 Screw ……2

L/R

19 Rear Suspension

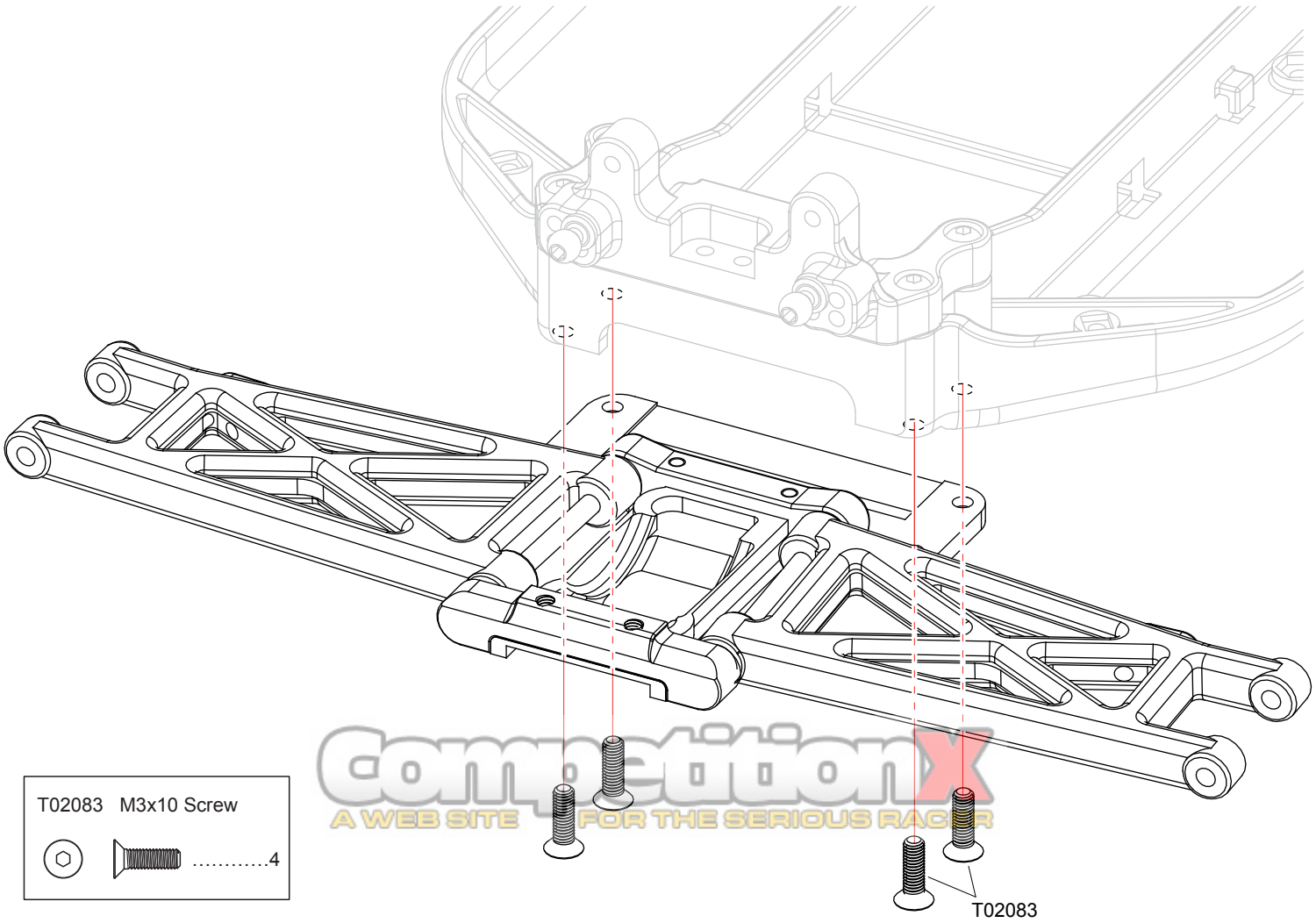

T02083 M3x10 Screw ……4

CompetitionX
A WEB SITE FOR THE SERIOUS RACER

9

L/R Assemble left and right sides the same way

20 Rear Transmission

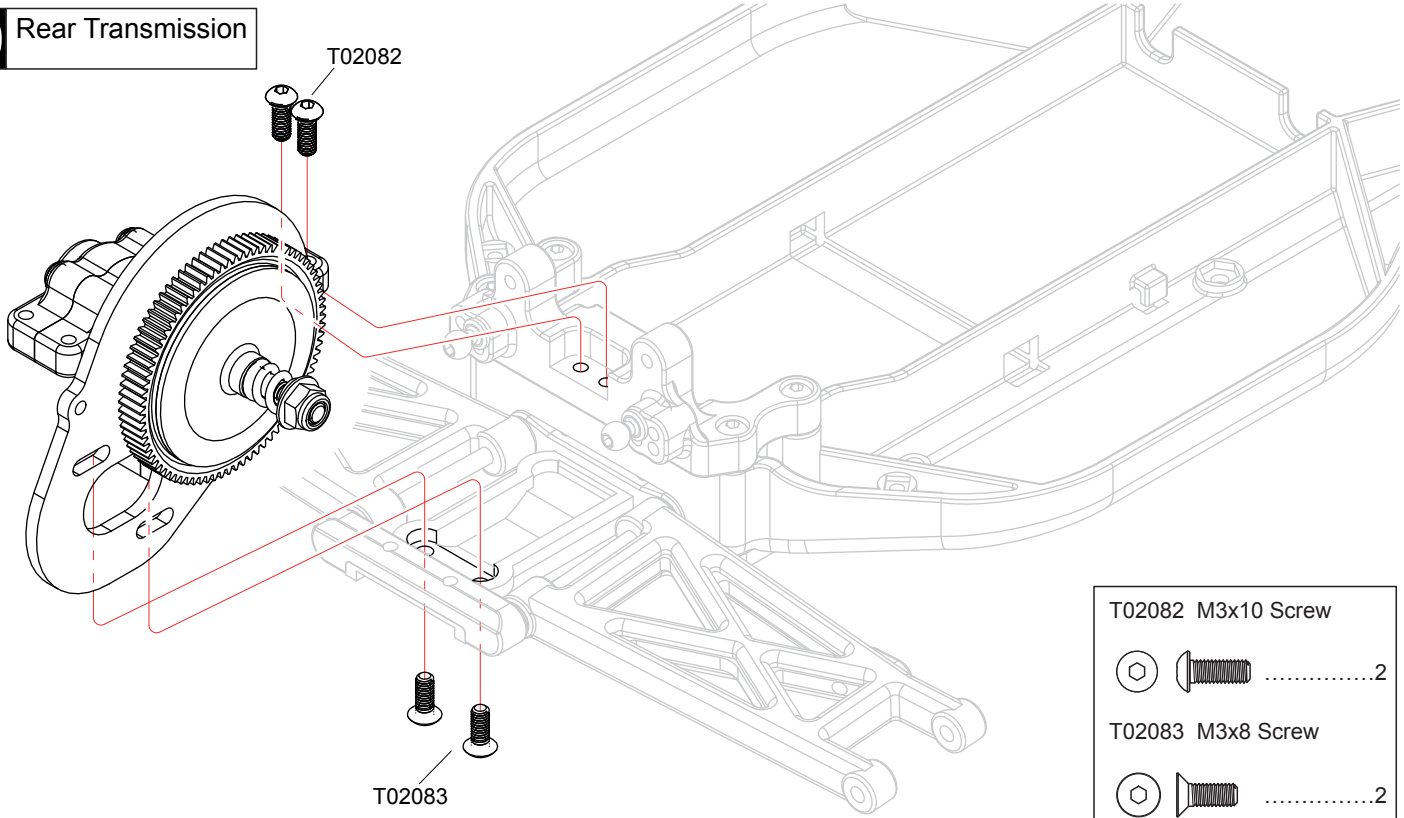

T02082 M3x10 Screw ……2

T02083 M3x8 Screw ……2

21 Rear Shock Tower & Rear Fender

T02082 M3x8 Screw ……2

T02082 M3x10 Screw ……4

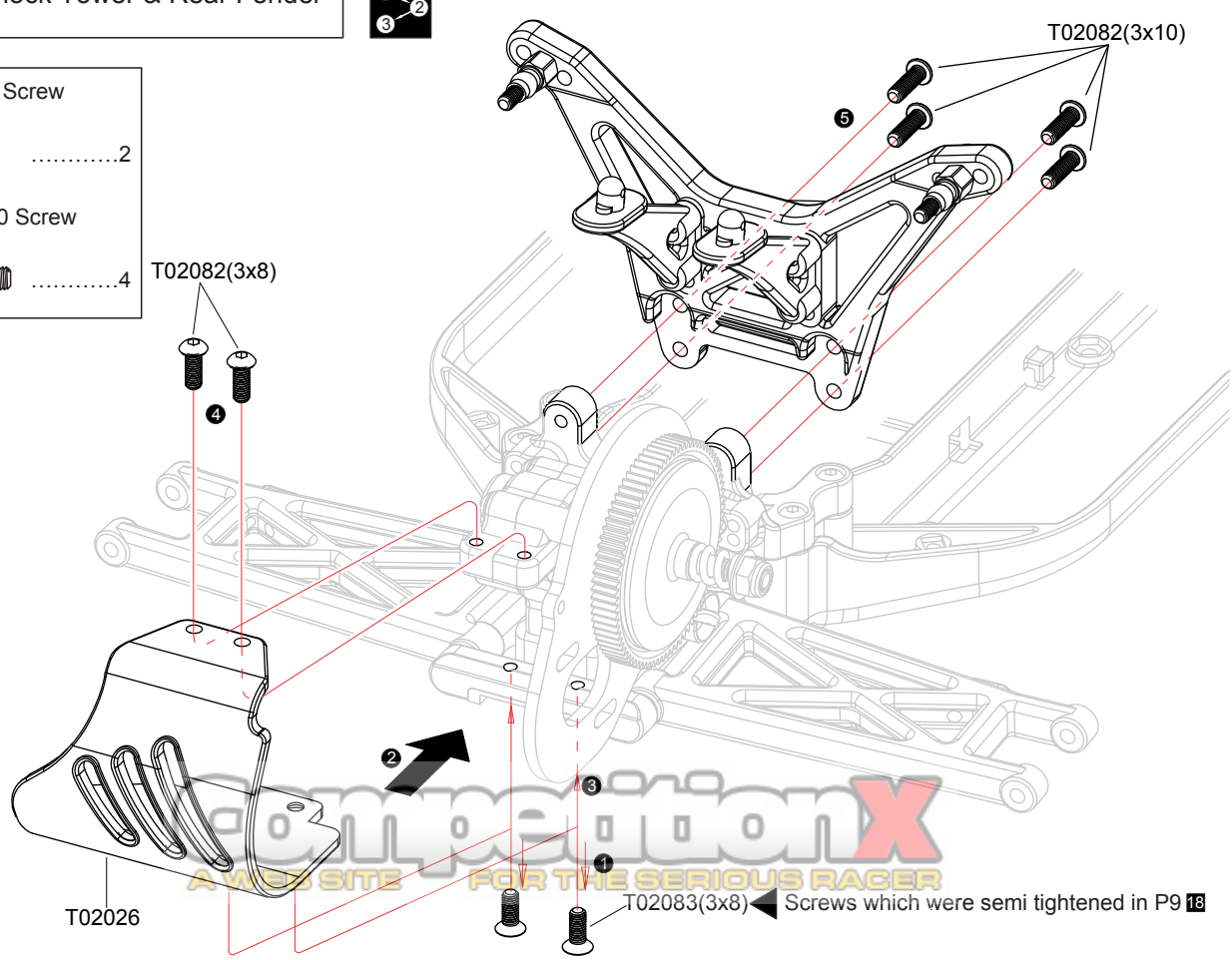

◀ Screws which were semi tightened in P9 18

CompetitionX
AMOS SITE FOR THE SERIOUS RACER

Assemble in the specified order

22 Rear Suspension

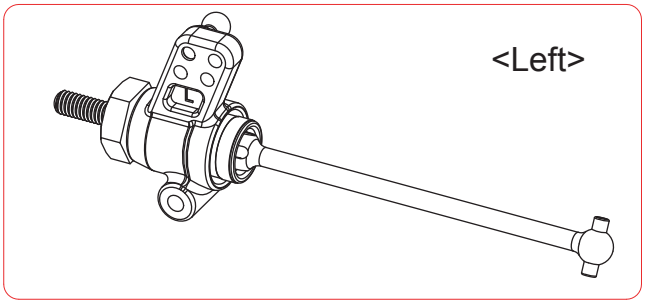

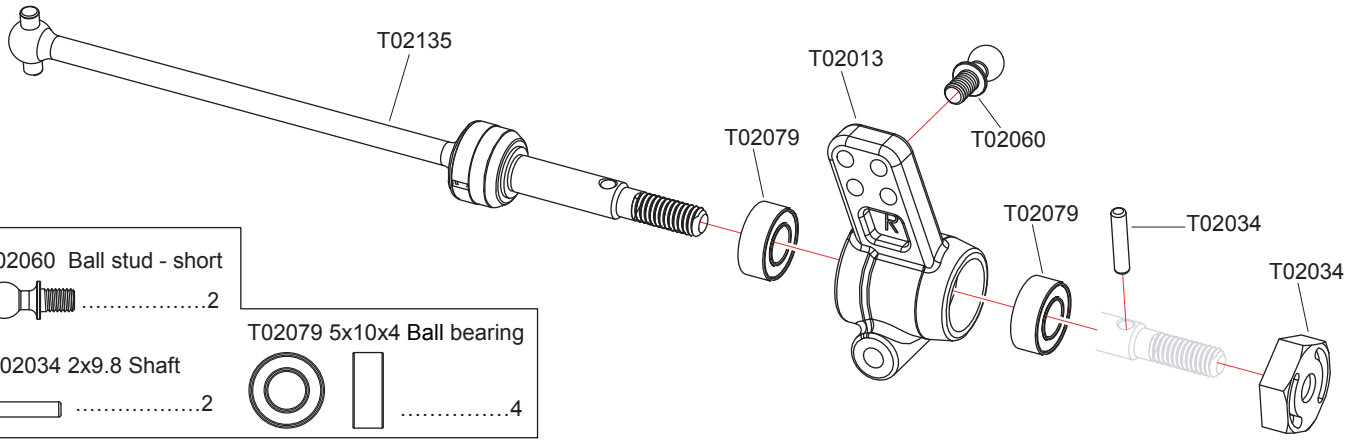

T02060 Ball stud - short 2

T02034 2x9.8 Shaft 2

T02079 5x10x4 Ball bearing 4

23 Rear Suspension

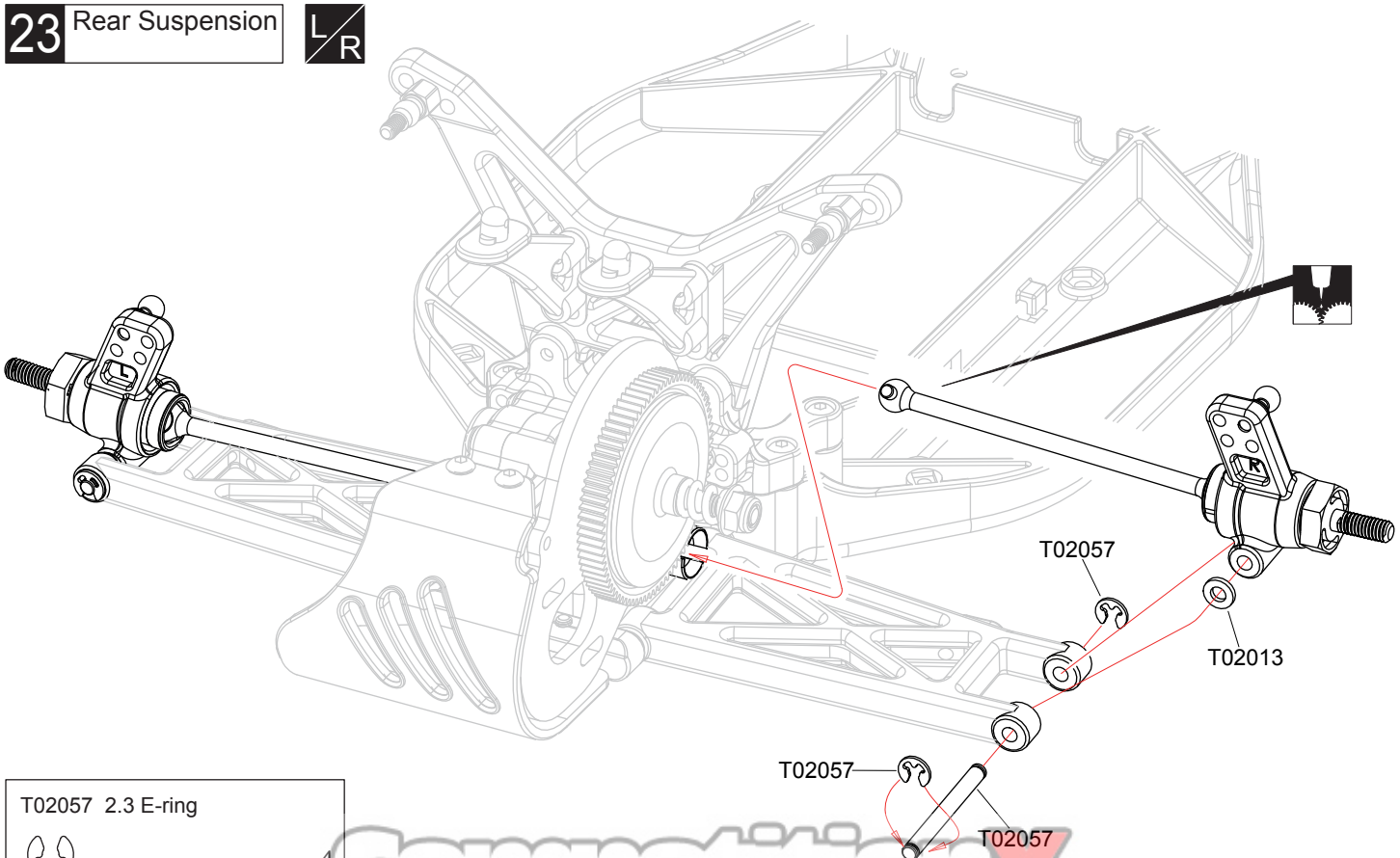

T02057 2.3 E-ring 4

T02013 3.1x6x1 Plastic Washer 2

T02057 3x30.5 Hinge pin Rear outer 2

CompetitionX
A TOOL FOR THE SERIOUS RACER

L/R Assemble left and right sides the same way

Apply grease

24 Rear Suspension

T02029 4.8mm Ball End(Long) 4

T02091 3x54 Turnbuckle 2

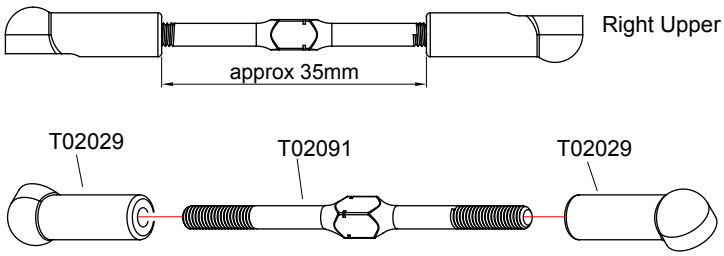

Right Upper x2 1:1

25 Rear Suspension

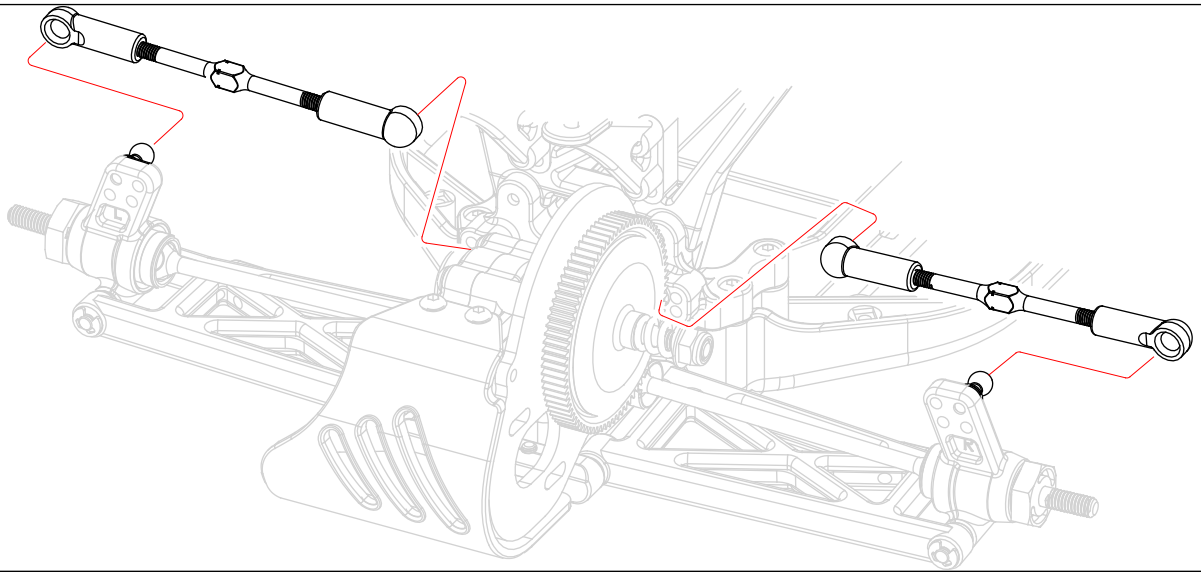

26 Main Chassis

T02083 M3x8 Screw 2

T02083 M3x10 Screw 2

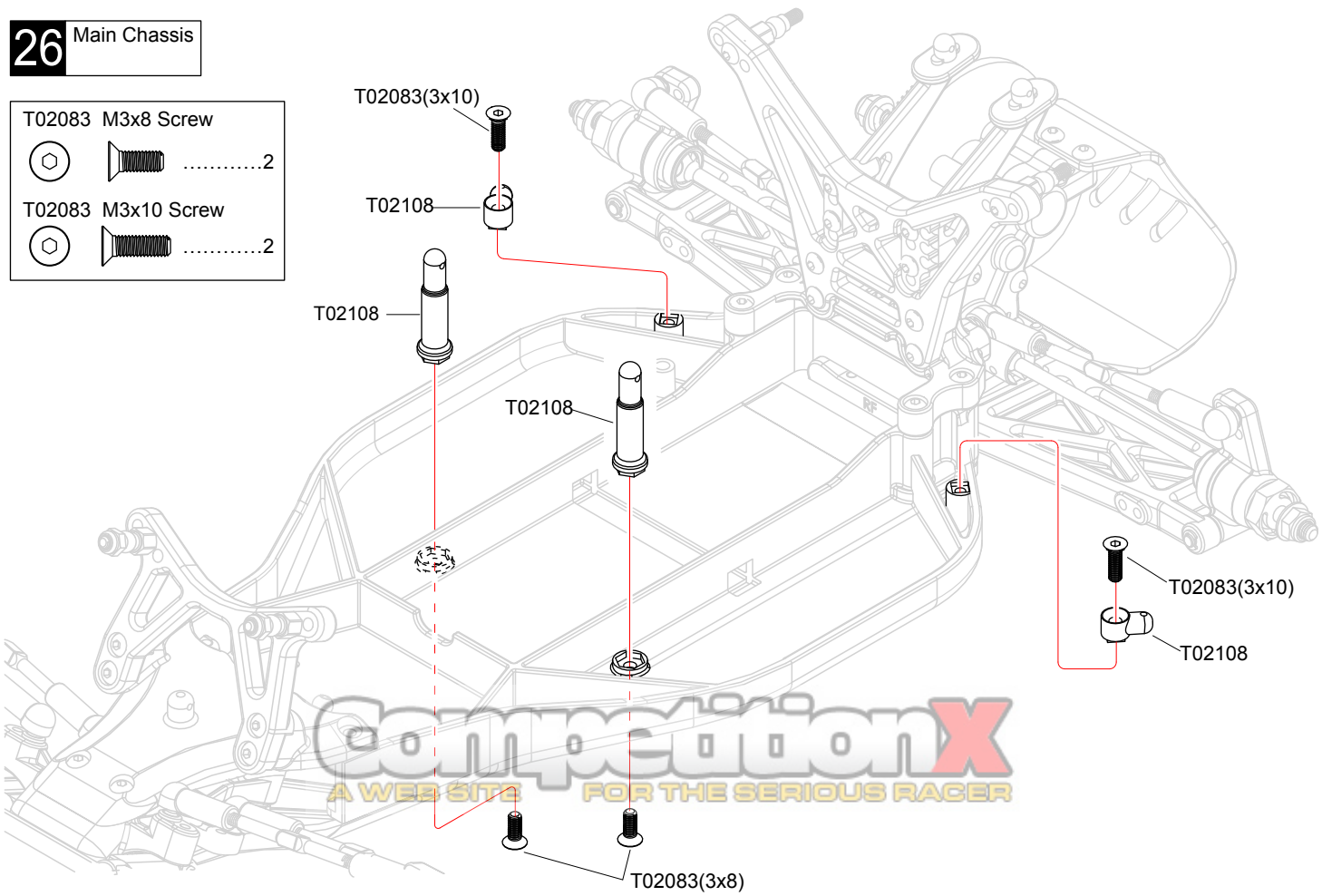

CompetitionX
A WEB SITE FOR THE SERIOUS RACER

x2 Assemble as many times as specified 1:1 Ture-to -scale diagram

27 Shock Absorber

Front x2

Rear x2

T02138 / T02139 2.3 E-ring ……8

T02068 9.9x2.5 Shock Piston ……4

T02069 2.8x1.9 O-ring ……8

T02069 3.1x1mm Plastic Washer ……4

T02066 & T02067 8x1 O-ring ……4

T02114 5.8 Ball End ……4

T02137 5.8X6 Shock End Eyelet ……4

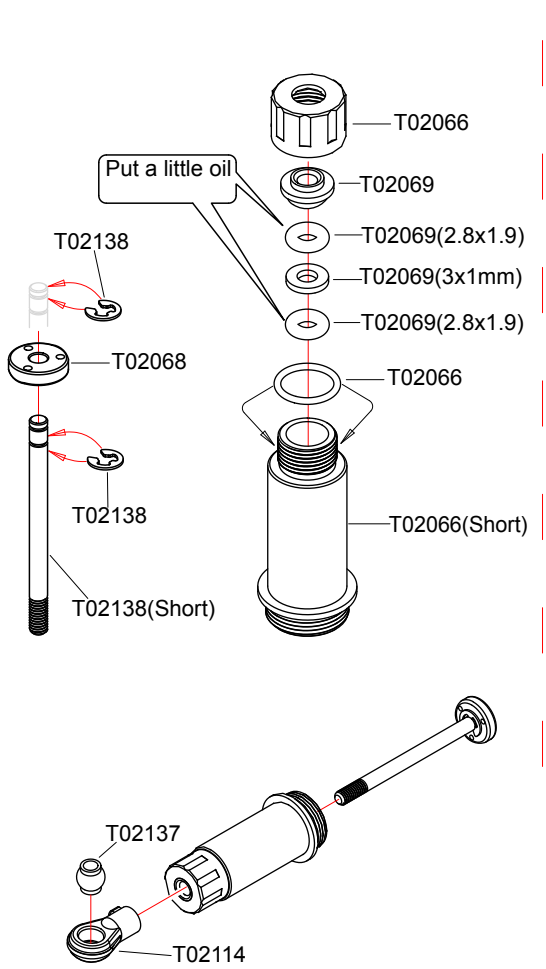

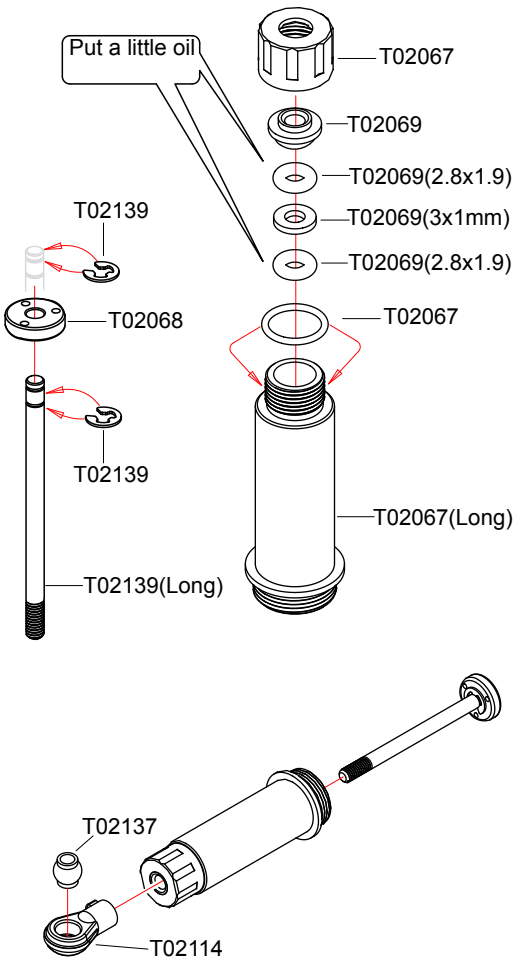

28 Shock Absorber

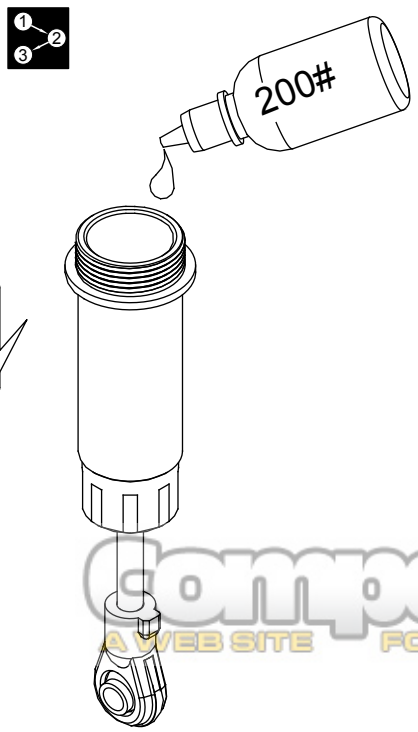

❶ Put the oil

for Front(Short)

for Rear(Long)

F/R x2

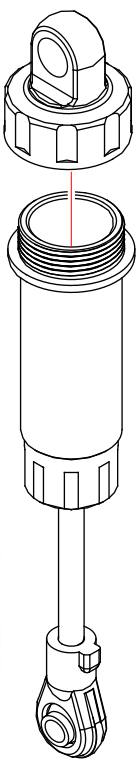

❷

for Front(Short)

for Rear(Long)

F/R x2

CompetitionX
A WEB SITE FOR THE SERIOUS RACER

x2 Assemble as many times as specified

Assemble in the specified order

F/R Assemble front and rear sides the same way

29 Shock Absorber

Front x2

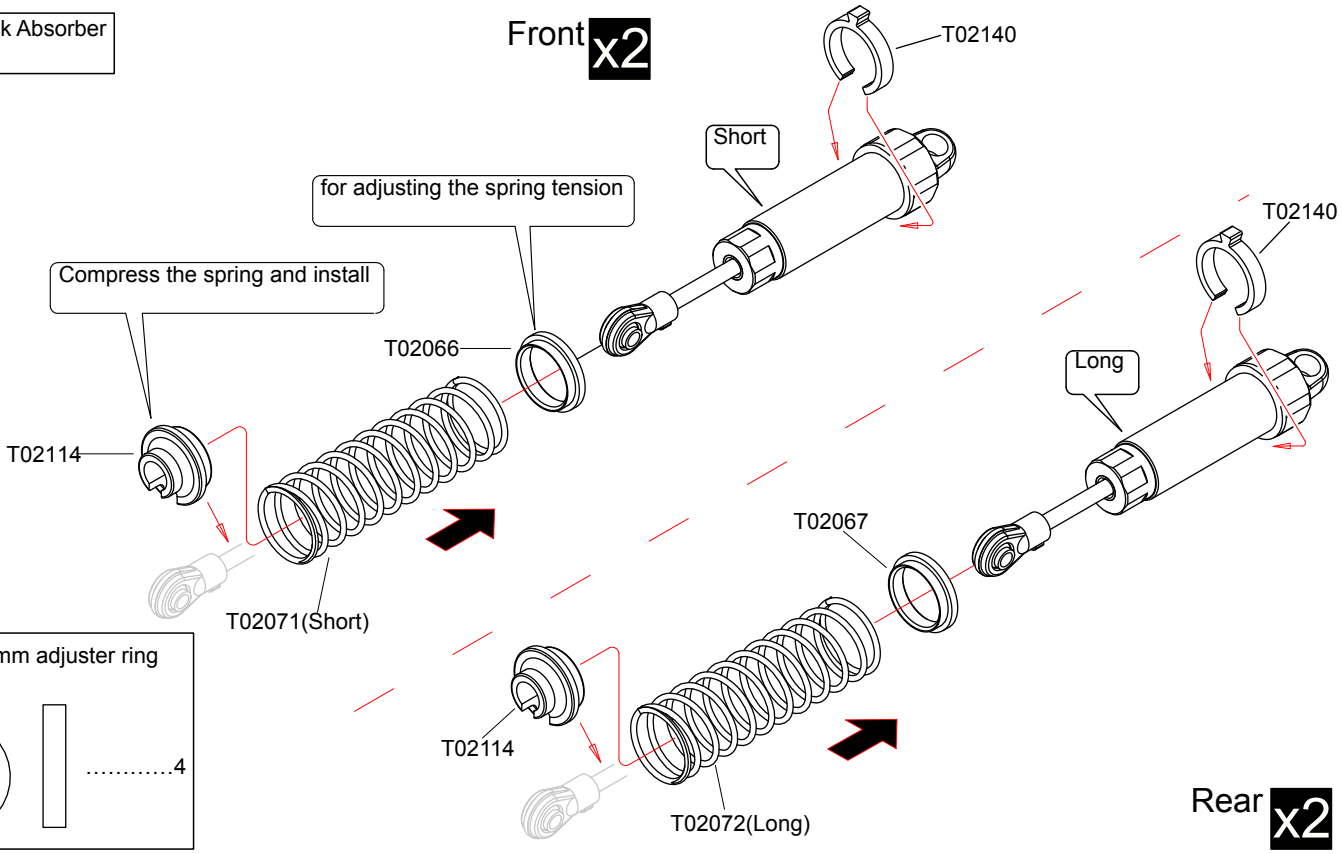

T02140 3mm adjuster ring ……4

Rear x2

30 Front Suspension L/R

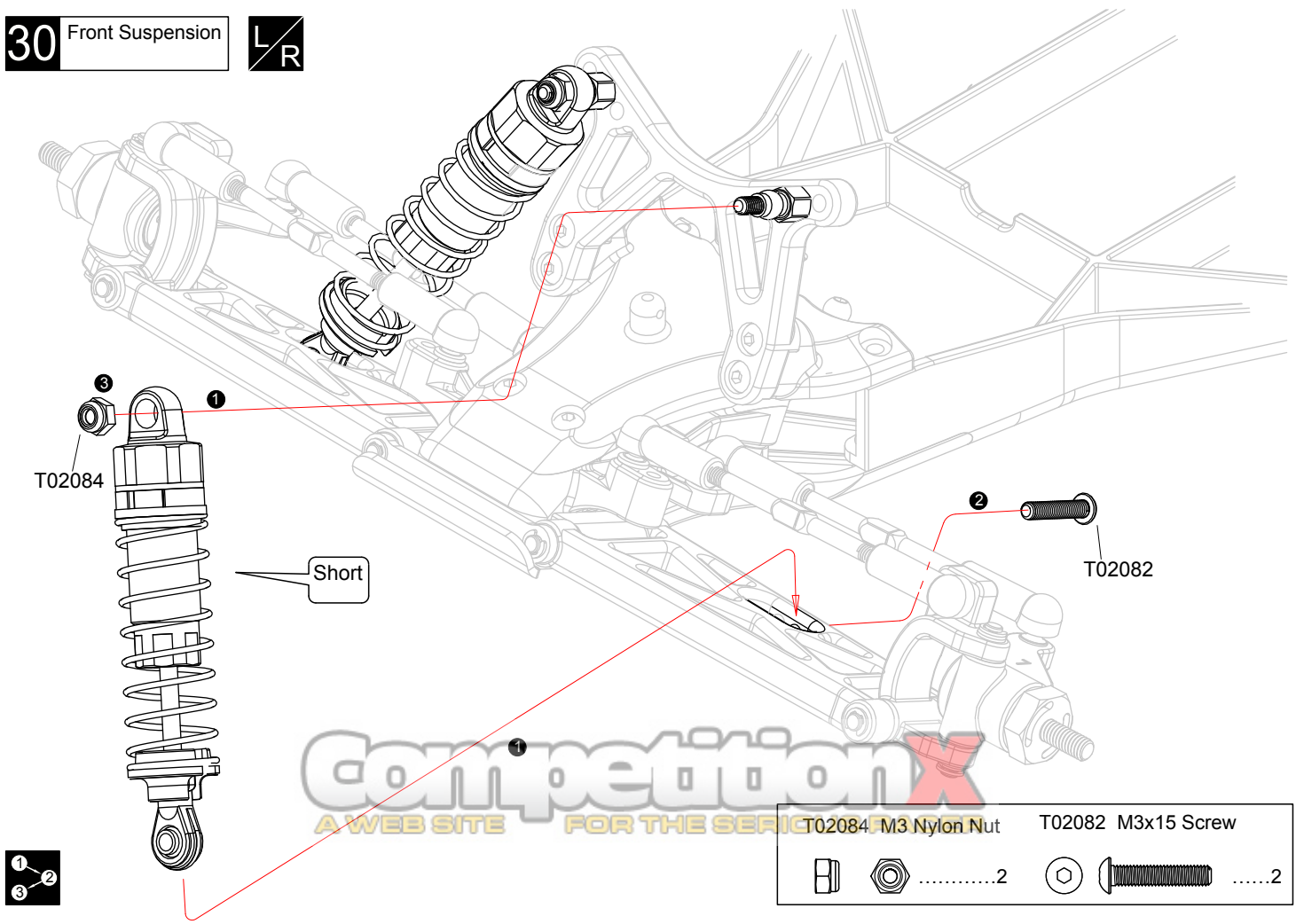

T02084 M3 Nylon Nut ……2

T02082 M3x15 Screw ……2

Competition X
A WEB SITE FOR THE SERIOUS

x2 Assemble as many times as specified

Assemble in the specified order

L/R Assemble left and rear sides the same way

31 Rear Suspension

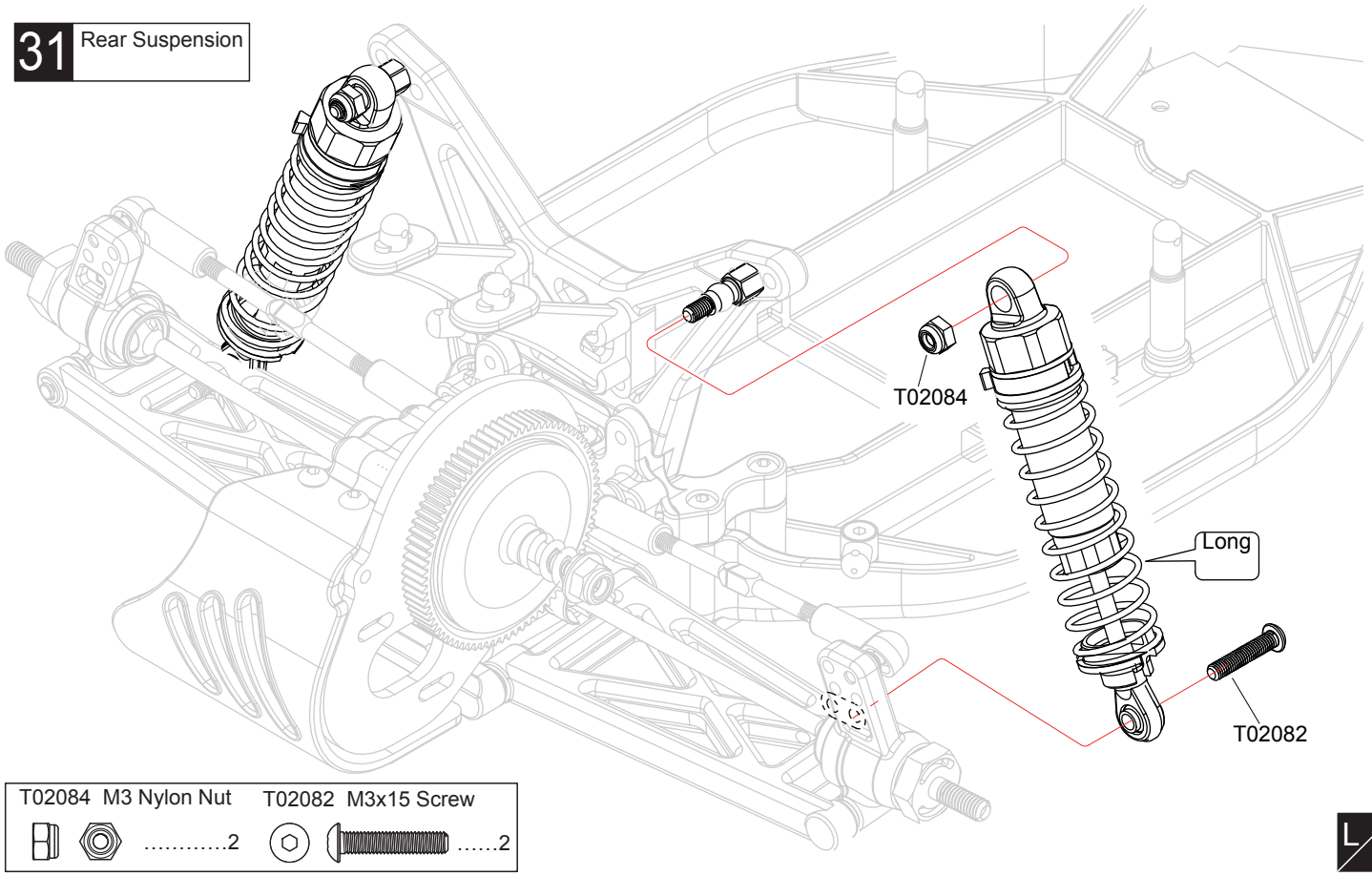

T02084 M3 Nylon Nut ……2

T02082 M3x15 Screw ……2

L/R

32 Motor

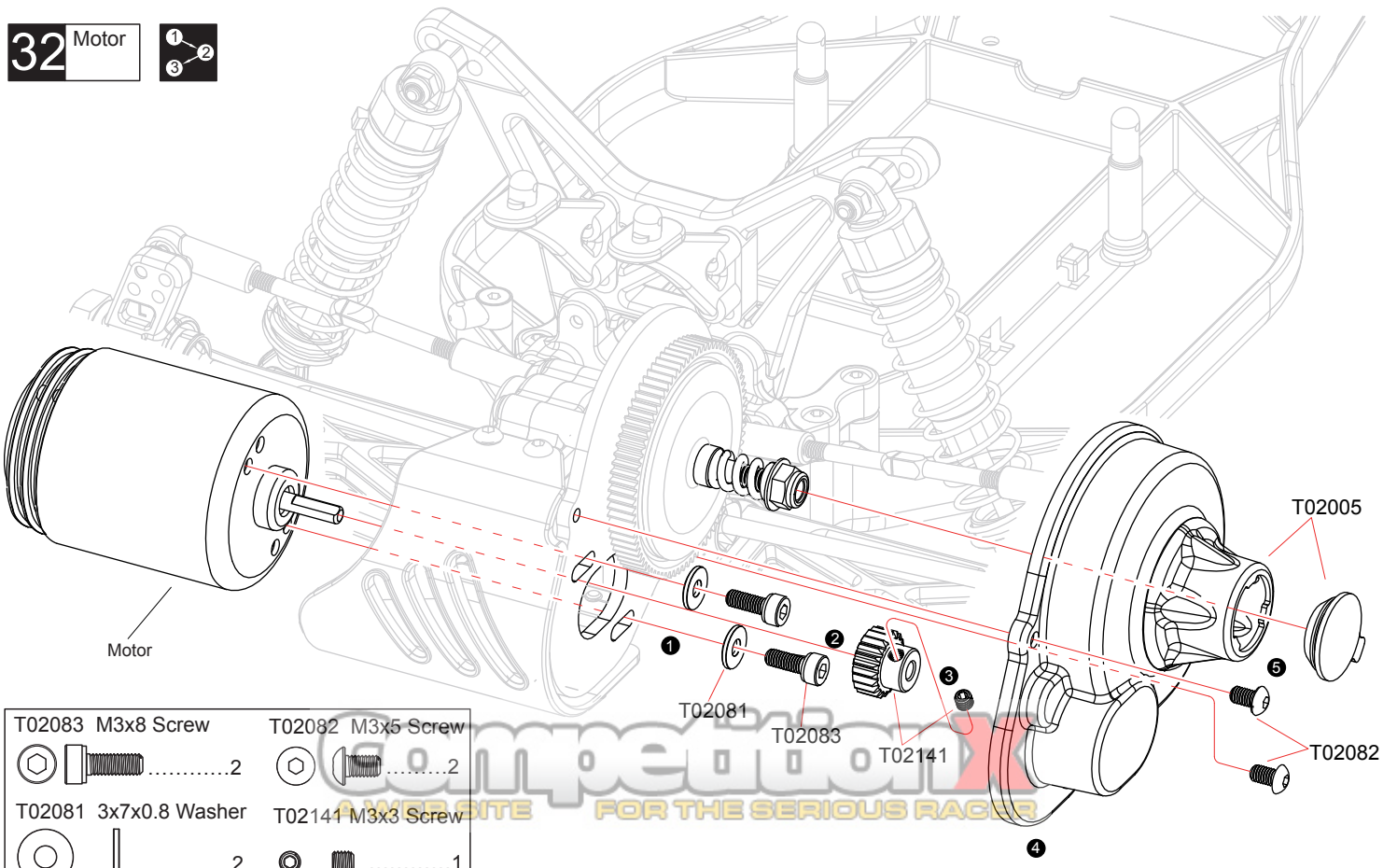

T02083 M3x8 Screw ……2

T02082 M3x5 Screw ……2

T02081 3x7x0.8 Washer ……2

T02141 M3x3 Screw ……1

Competition
A WEB SITE FOR THE SERIOUS RACER

L/R Assemble left and rear sides the same way

Assemble in the specified order

33 Steering Servo

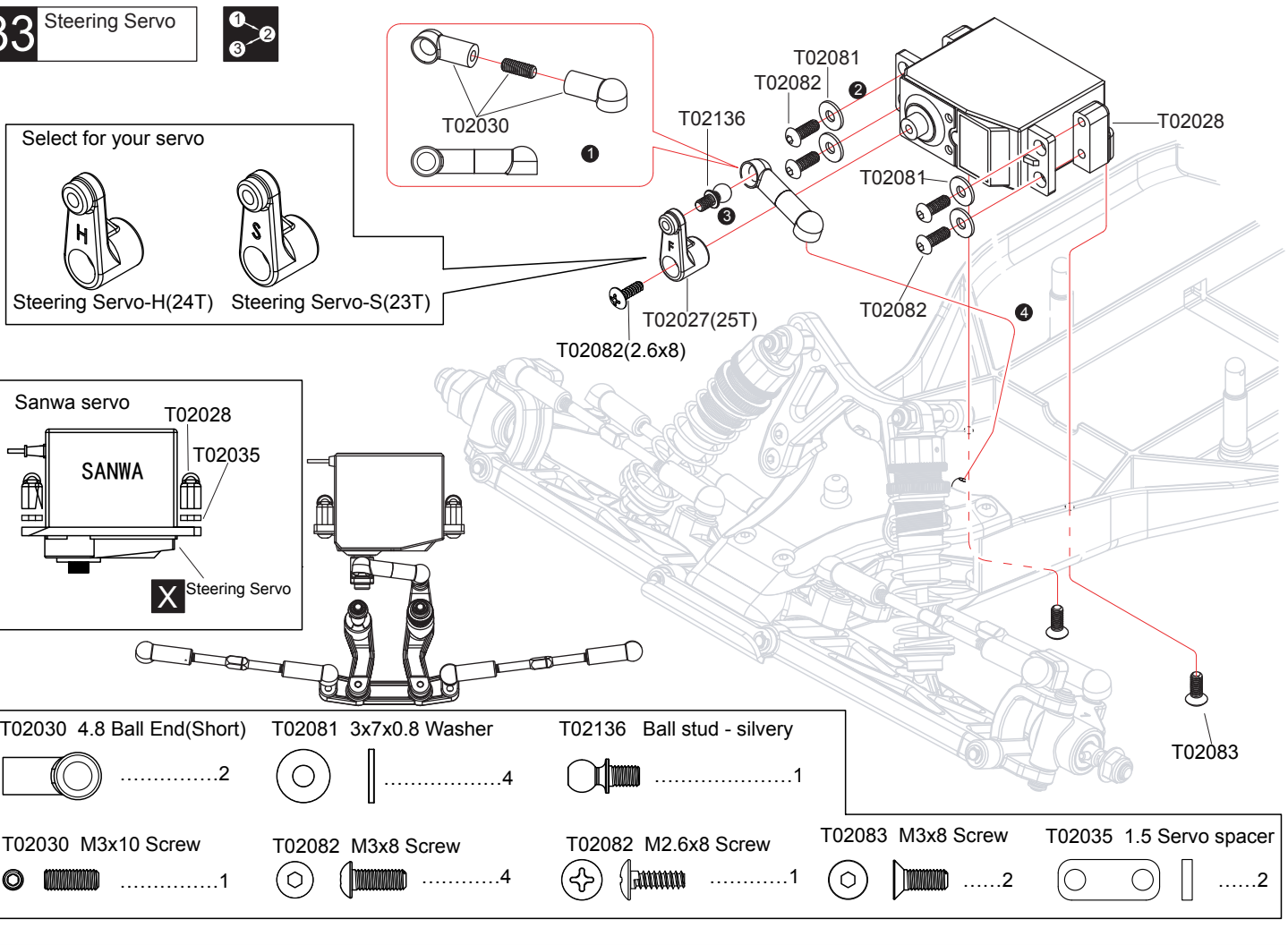

T02030 4.8 Ball End(Short) 2

T02081 3x7x0.8 Washer 4

T02136 Ball stud - silvery 1

T02030 M3x10 Screw 1

T02082 M3x8 Screw 4

T02082 M2.6x8 Screw 1

T02083 M3x8 Screw 2

T02035 1.5 Servo spacer 2

34 Radio

T02083 M3x8 Screw 2

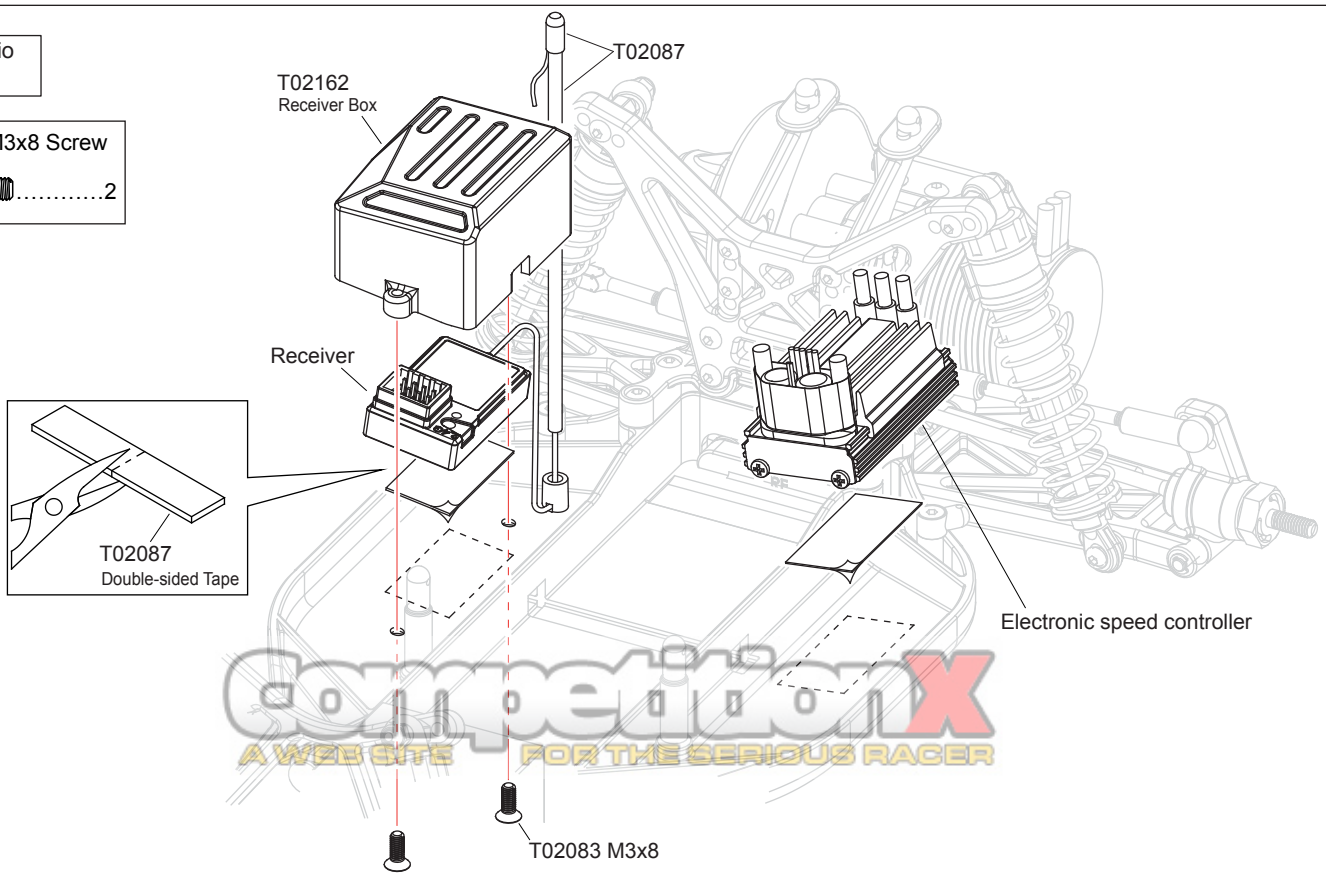

Competition X
A WEB SITE FOR THE SERIOUS RACER

Assemble in the specified order

X Must be purchased separately

35 Battery

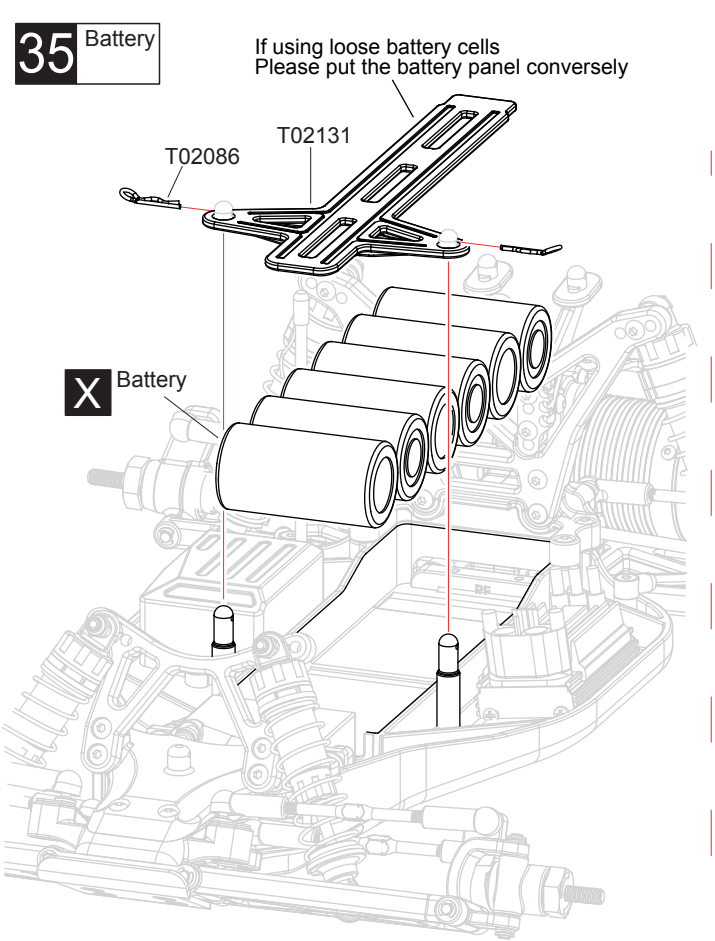

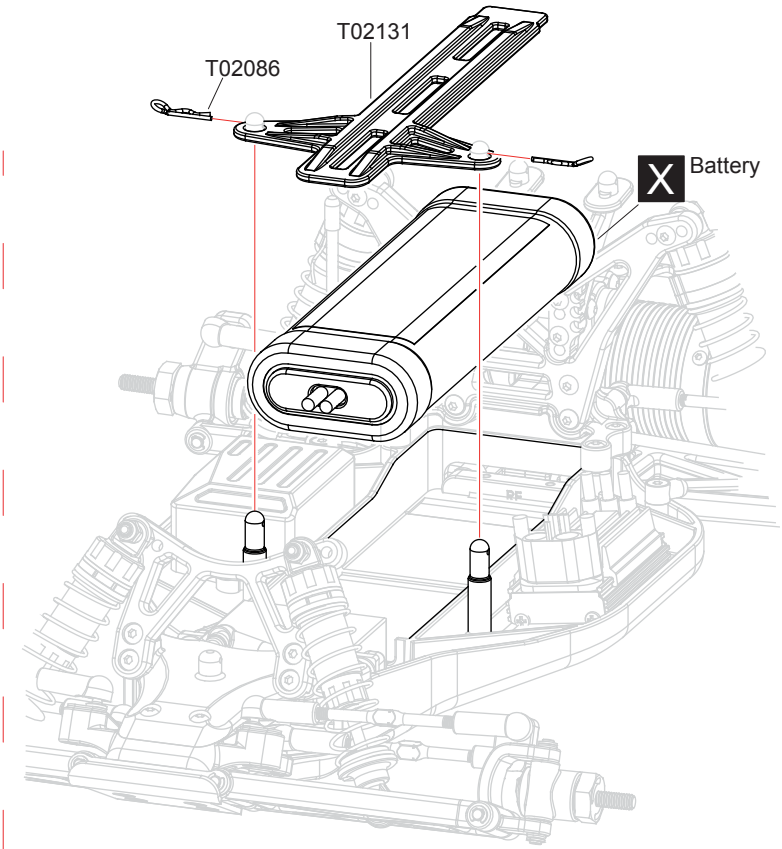

T02086 Small clip 2

36 Wheels

Front x2

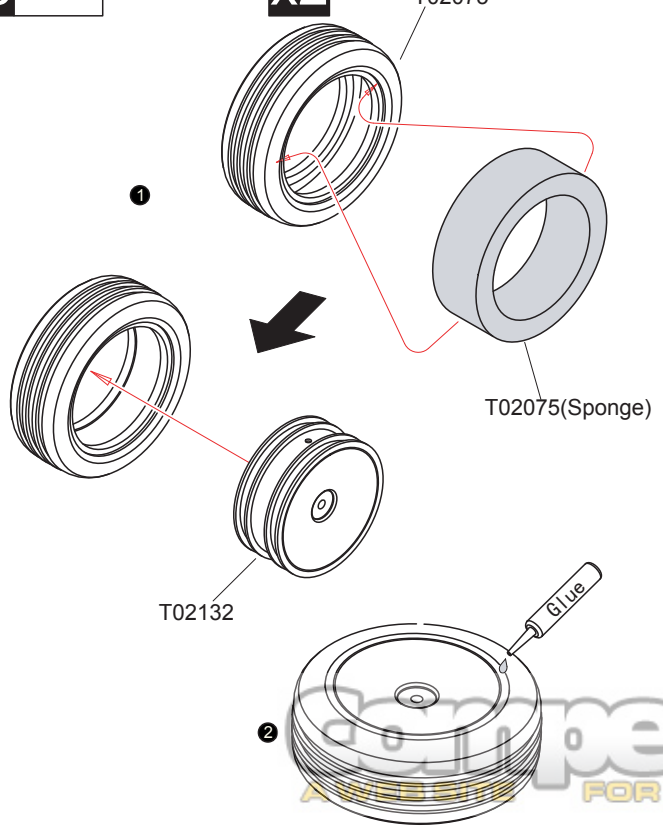

Rear x2

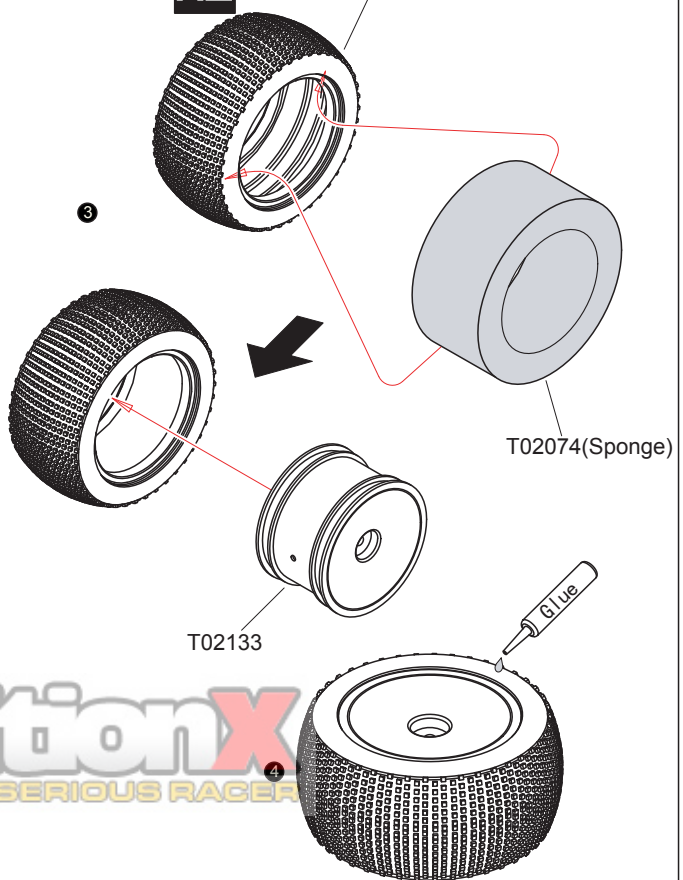

After fitting wheels to tyres,apply instant glue as shown

competitionX
A WEBSITE FOR THE SERIOUS RACER

x2 Assemble as many times as specified

Assemble in the specified order

X Must be purchased separately

37 Body Mounting

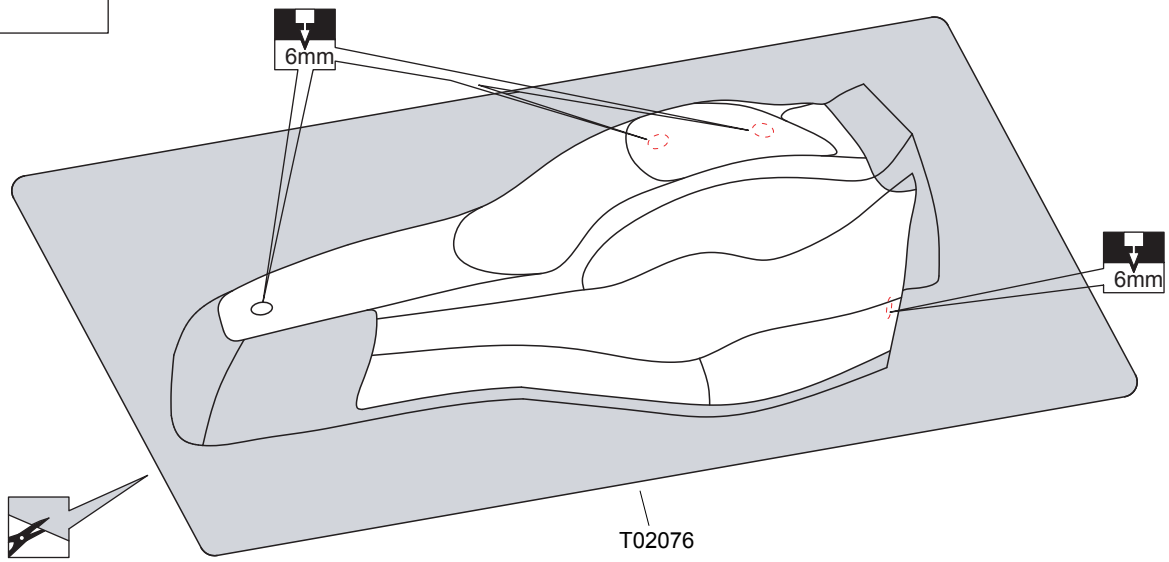

38 Body Mounting

T02086 Small clip ……5

T02084 M4 Flanged Nylon Nut ……4

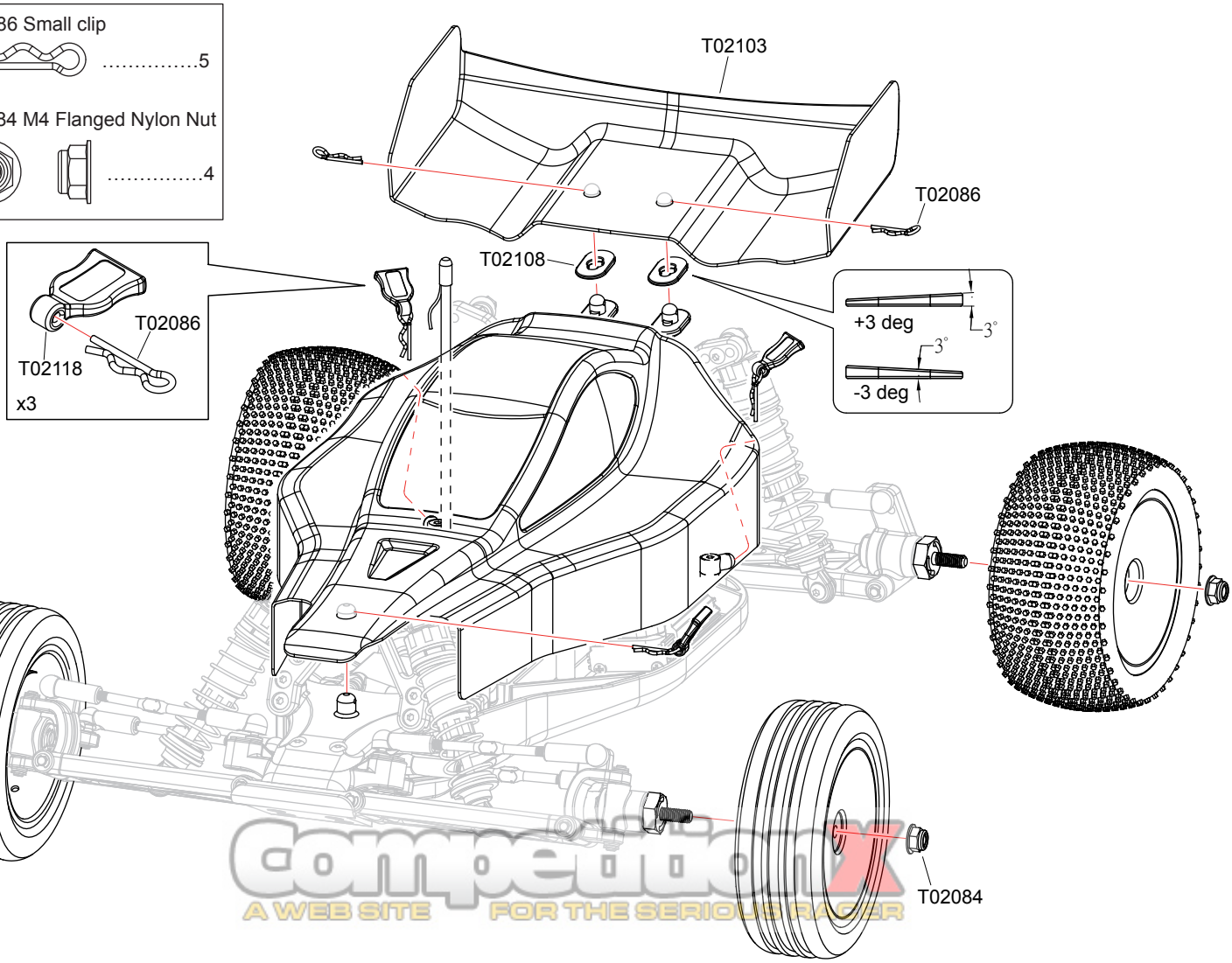

Competition
A WEB SITE FOR THE SERIOUS RACER

x2 Assemble as many times as specified

6mm Drill holes with the specified diameter

Cut off shaded portion

● Exploded View

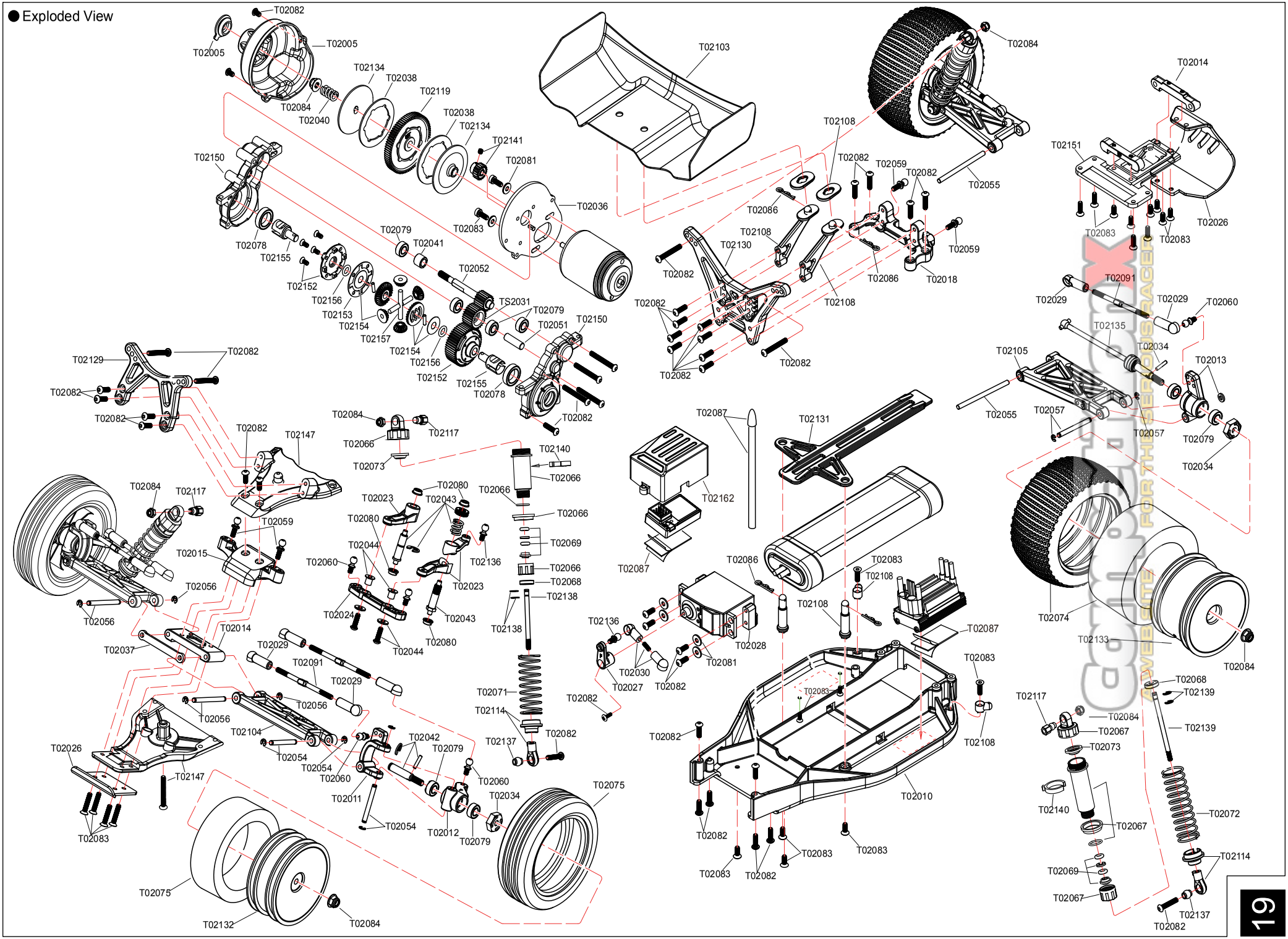

FOR THE SERIOUS RACER
ADVERSITY

BUGGY PARTS LIST

T02147

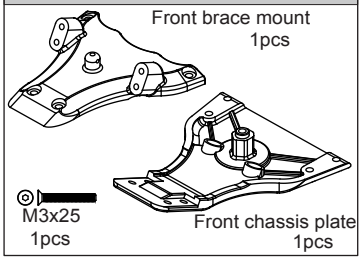

T02150

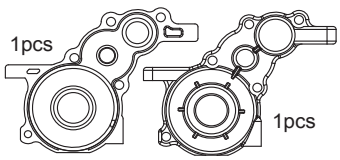

Gear Differential Case

T02152

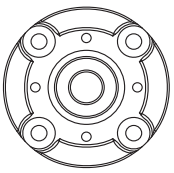

52T Diff Gear Cover
1pcs

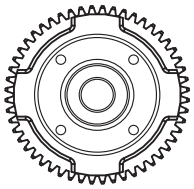

52T Diff Gear
1pcs

4pcs
M2.5x8 Screw

2pcs
4.8x1.6 O-ring

T02151

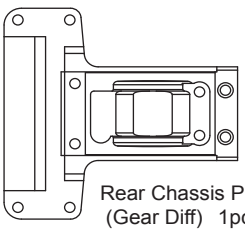

Rear Chassis Plate
(Gear Diff) 1pcs

T02153

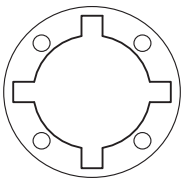

Gear Differential Seal 1pcs

T02154

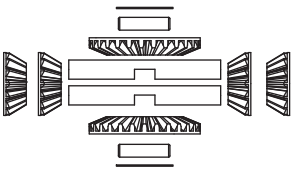

14T/28T Gear Set

T02155

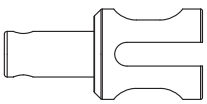

Gear Differential Outdrives
2pcs

T02156

4.8x1.6 Gear Diff O-Ring
4pcs

T02157

Gear Diff Shaft
2pcs

T08802

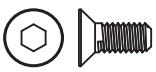

M2.5x8 Screw
8pcs

T02078

10x15x4 Ball bearing-Metal cover
6pcs

T02079

5x10x4 Ball bearing-Metal cover
6pcs

T02080

3x6x2.5 Ball bearing-Metal cover
4pcs

T02162

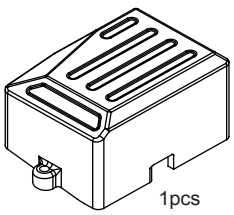

1pcs
Receiver Box

T02103

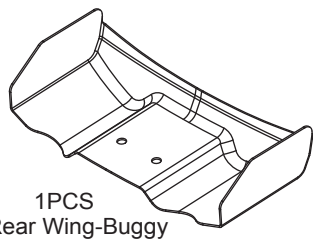

1PCS
Rear Wing-Buggy

T02076

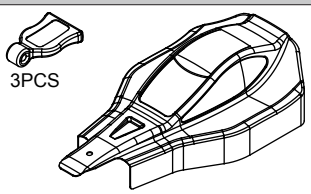

Stock Buggy Body
Lexan-Clear 1PCS

T02119

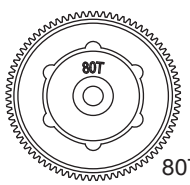

80T Spur Gear
1PCS

TS2031

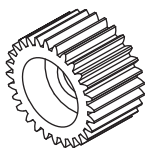

28T Idler Gear Aluminum 1PCS

T02005

Gear Cover Button
1PCS

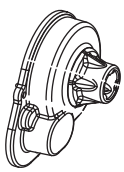

Gear Cover
1PCS

CompetitionX
A WEB SITE FOR THE RC RACER

T02010

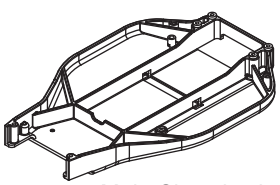

Main Chassis plate
1PCS

T02011

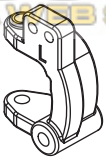

C-type holder L
1PCS

C-type holder R
1PCS

T02012

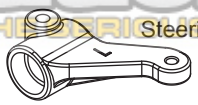

Steering block-L
1PCS

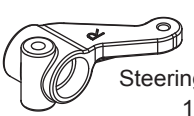

Steering block-R
1PCS

T02013

3.1x6x1 Plastic Washer
4PCS

Rear hub carriers-L
1PCS

Rear hub carriers-R
1PCS

BUGGY PARTS LIST

T02014

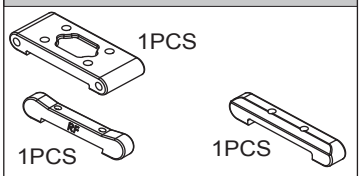

1PCS
1PCS
1PCS

Front Bulkhead-Rear Pin Mount Set

T02015

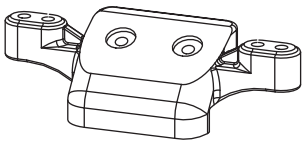

Front upper suspension arm mount
1PCS

T02104

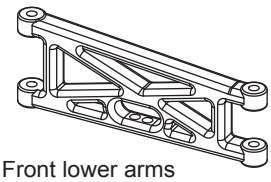

Front lower arms
2PCS

T02105

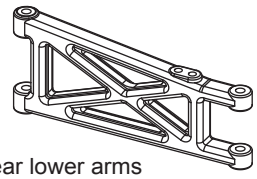

Rear lower arms
2PCS

T02018

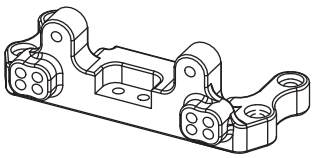

Rear brace mount
1PCS

T02129

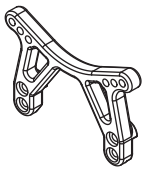

Front shock tower
1PCS

T02130

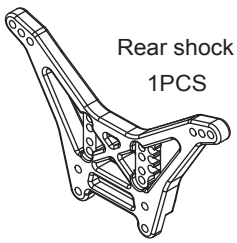

Rear shock tower
1PCS

T02131

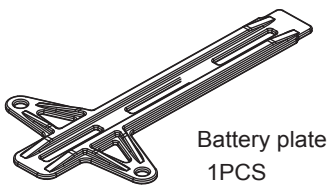

Battery plate
1PCS

T02023

Servo saver upper
1PCS

Servo saver lower
1PCS

Servo saver - L
1PCS

T02024

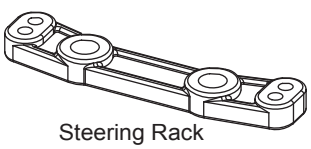

Steering Rack
1PCS

T02108

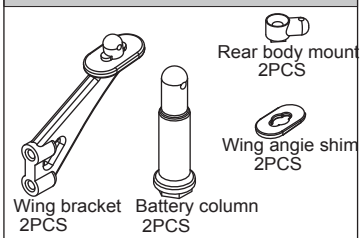

Rear body mount
2PCS

Wing angie shim
2PCS

Wing bracket
2PCS

Battery column
2PCS

T02026

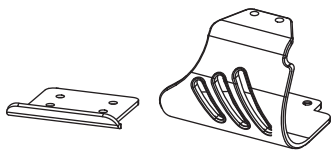

Front bumper
1PCS

Motor guard
1PCS

T02027

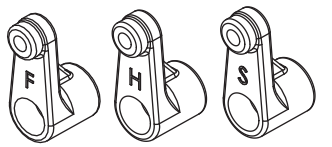

Steering Servo horn-F
1PCS

Steering Servo horn-H
1PCS

Steering Servo horn-S
1PCS

T02028

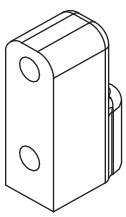

Servo plate
2PCS

T02029

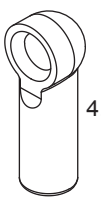

4.8 Ball End-Long
6PCS

T02030

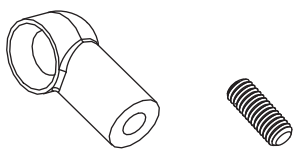

4.8 Ball End-Short
2PCS

3x10 Screw
1PCS

T02114

Below Spring mount end
2PCS

5.8 Ball End
2PCS

T02132

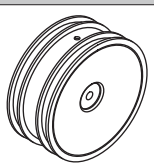

Front rim
2PCS

T02133

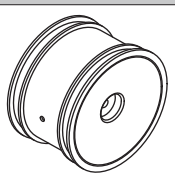

Rear rim
2PCS

T02034

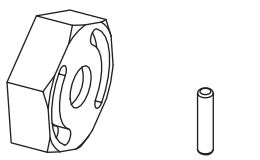

Hexagonal
4PCS

2x9.8 Pin
4PCS

T02035

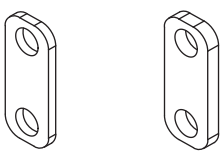

1.0 Servo spacer
2PCS

1.5 Servo spacer
2PCS

T02036

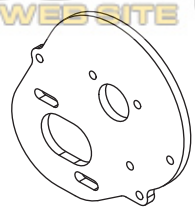

Motor plate
1PCS

T02037

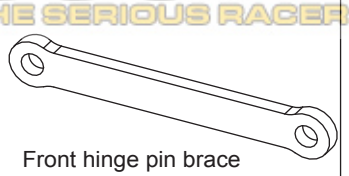

Front hinge pin brace
1PCS

T02038

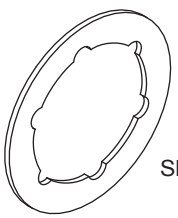

Slipper pad
2PCS

CompetitionX
A WEBSITE FOR THE SERIOUS RACER

BUGGY PARTS LIST

T02134

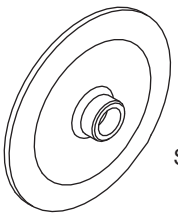

Slipper hub
2PCS

T02040

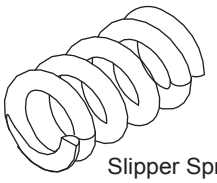

Slipper Spring
1PCS

T02041

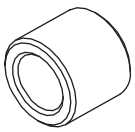

Top shaft spacer
1PCS

T02043

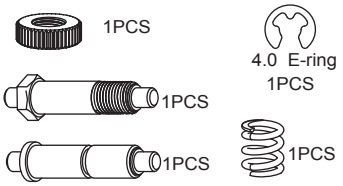

Servo Saver Shaft Assembly

T02042

4.0 E-ring
2PCS

2x9.8 Pin
2PCS

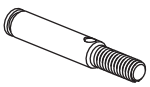

Front wheel axle
2PCS

T02044

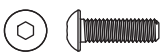

3x10 Screw
2PCS

Block Carrier
2PCS

3x7x0.8 Washer
2PCS

T02091

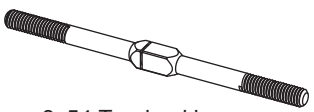

3x54 Turnbuckle
2PCS

T02051

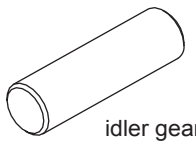

idler gear shaft
1PCS

T02052

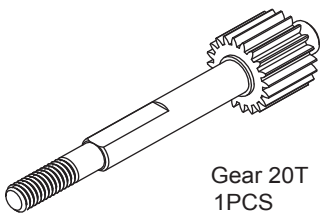

Gear 20T
1PCS

T02054

2.3 E-ring
4PCS

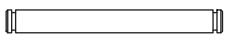

3x27.5 Hinge pin front outer
2PCS

T02055

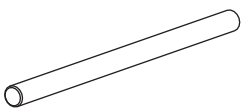

3x48 Hinge pin Rear inner
2PCS

T02056

2.3 E-ring
4PCS

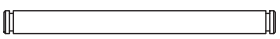

3x34.5 Hinge pin front inner
2PCS

T02057

2.3 E-ring
4PCS

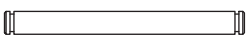

3x30.5 Hinge pin Rear outer
2PCS

T02135

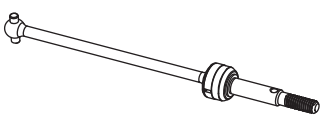

Rear Drive Shaft Assembly
2PCS

T02059

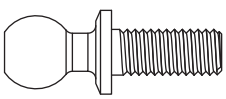

Ball stud - long
2PCS

T02060

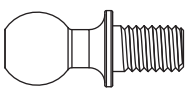

Ball stud - short
5PCS

T02136

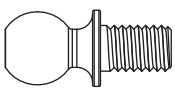

Ball stud - silvery
2PCS

T02137

Shock End Eyelet 5.8X6
4PCS

T02117

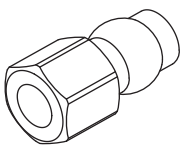

Upper Shock Bushing
4PCS

T02138

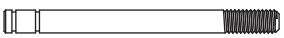

3x42.5 Front Shock Shaft
2PCS

2.3 E-ring
4PCS

T02139

3x51 Rear Shock Shaft
2PCS

2.3 E-ring
4PCS

T02066

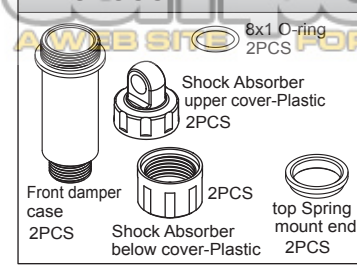

T02067

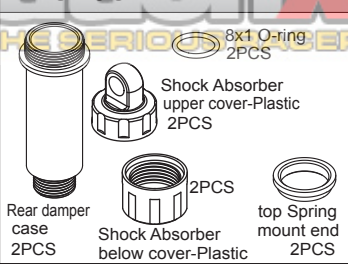

T02068

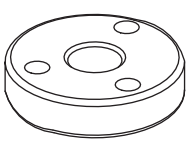

Shock piston
4PCS

Competition X
AWEB SITE FOR THE SERIOUS RACER

BUGGY PARTS LIST

T02069

3.1x1mm Plastic Washer
4PCS

2.8x1.9 O-ring
8PCS

3.5 Press washer
4PCS

T02140

1mm adjuster ring
4PCS

2mm adjuster ring
4PCS

3mm adjuster ring
4PCS

5mm adjuster ring
4PCS

T02071

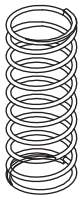
Front spring
2PCS

T02072

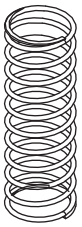
Rear spring
2PCS

T02073

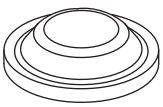
Diaphragm
4PCS

T02074

2PCS

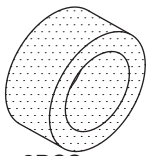
2PCS

Rear buggy tires with foams

T02075

2PCS

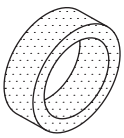
2PCS

Front ribbed buggy tires with foams

T02081

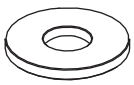
3x7x0.8 Washer
10PCS

T02082

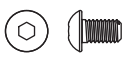
3x5 Screw
8PCS

3x15 Screw
8PCS

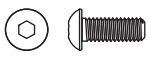
3x8 Screw
8PCS

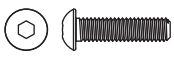
3x12 Screw
8PCS

3x22 Screw
8PCS

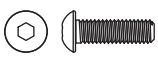
3x10 Screw
8PCS

3x25 Screw
8PCS

2.6x8 Screw
8PCS

T02083

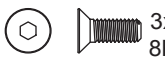
3x8 Screw
8PCS

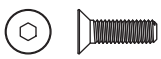
3x10 Screw
8PCS

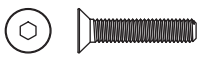
3x15 Screw
8PCS

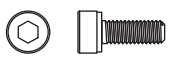
3x8 Screw
8PCS

T02084

M4 Flanged Nylon
Nut
6PCS

M3 Nylon Nut
6PCS

T02088

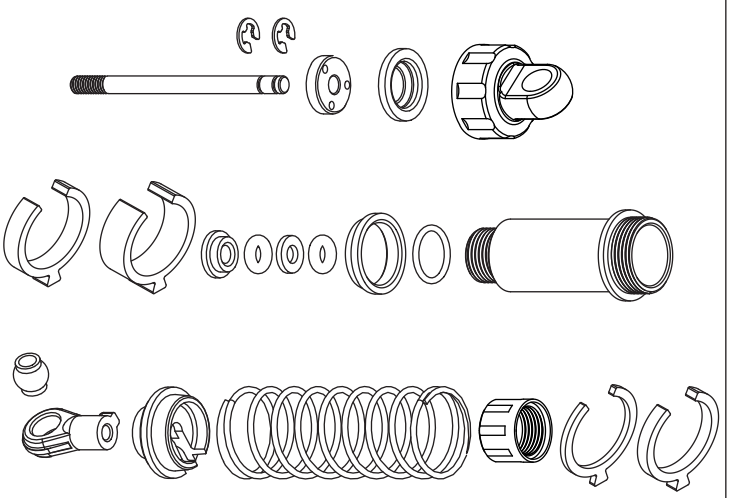
Front shock set buggy
2PCS

T02089

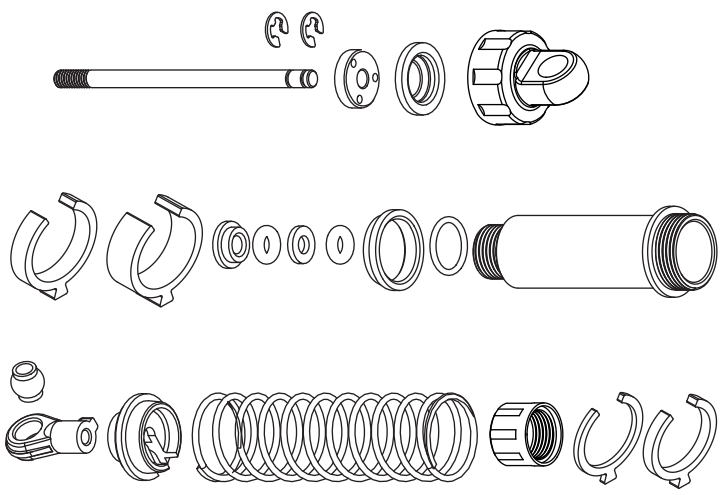
Rear shock set buggy
2PCS

T02085

2.3 E-ring
8PCS

4 E-ring
8PCS

T02086

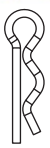
Small clip
8PCS

T02087

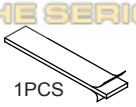
1PCS
Double-sided tape

Antenna pipe
set cover
1PCS

Antenna pipe set 1PCS

TU0216

OP

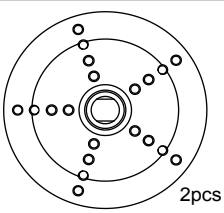
2pcs
Vented Slipper Hub

CompetitionX
A WEB SITE FOR THE SERIOUS RACER

BUGGY PARTS LIST

TU0218 OP

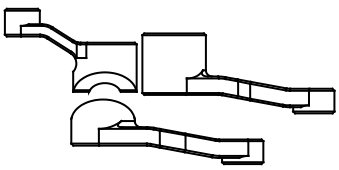

Servo Saver-Aluminium

Tu0219 OP

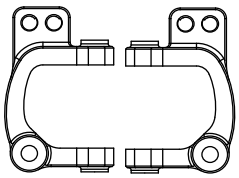

C-Type-Holder 25 Degree

Tu0220 OP

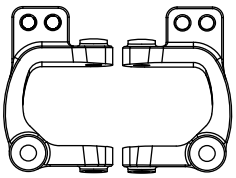

C-Type-Holder 30 Degree

Tu0221 OP

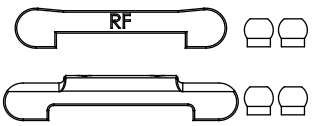

Rear arm mount F/R
1Set

Tu0222 OP

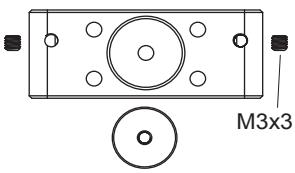

Front arm mount 1Set

Tu0223 OP

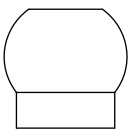

Rear arm mount -Ball 8pcs

Tu0224 OP

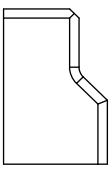

Servo mount 2pcs

Tu0225 OP

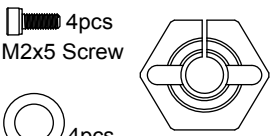

Hex mount
4pcs

TU0227 OP

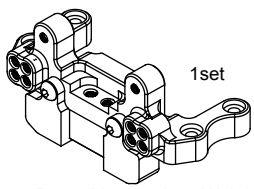

Rear Brace Mount w/20g Weight

Tu0229 OP

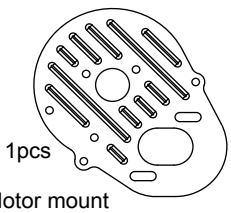

Motor mount

Tu0230 OP

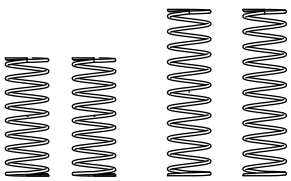

Hard Spring Set F&R

Tu0231 OP

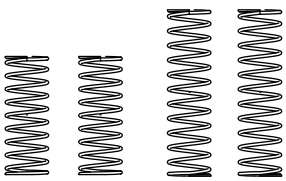

Medium Spring Set F&R

Tu0232 OP

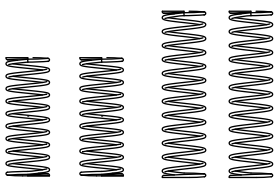

Soft Spring Set F&R

Tu0236 OP

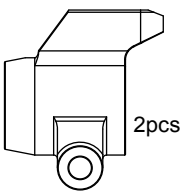

Rear hub carriers

Tu0237 OP

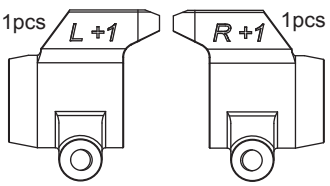

Rear Hub 1 Degree

TU0240 OP

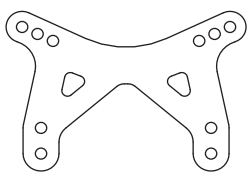

Carbon Front Shock Tower - Buggy
1pcs

TU0242 OP

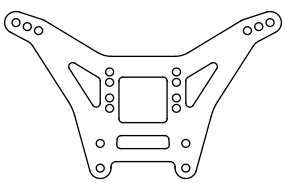

Carbon Rear Shock Tower-Buggy
1pcs

Tu0248 OP

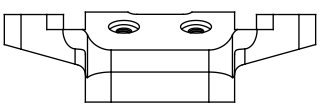

Aluminum Front Camber
Link Mount 1pcs

TU0254 OP

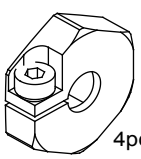

12mm Hex Hub-4mm

TU0276 OP

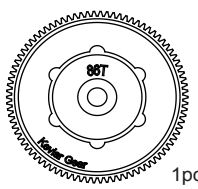

86T Kevlar Gear

TU0277 OP

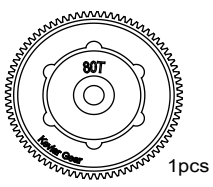

80T Kevlar Gear

CompetitionX
A WEB SITE FOR THE SERIOUS RACER

BUGGY PARTS LIST

RCET02005	GEAR COVER	$ 2.49
RCET02010	MAIN CHASSIS PLATE	$ 17.99
RCET02011	CASTOR BLOCKS L/R	$ 3.99
RCET02012	STEERING BLOCK	$ 2.99
RCET02013	REAR HUB CARRIERS	$ 2.99
RCET02014	FRONT BULKHEAD-REAR PIN MOUNT SET	$ 2.99
RCET02015	FRONT CAMBER LINK MOUNT	$ 2.99
RCET02018	REAR CHASSIS BRACE MOUNT	$ 3.99
RCET02023	SERVO SAVER SET	$ 3.99
RCET02024	STEERING RACK	$ 2.99
RCET02026	MOTOR GUARD	$ 4.99
RCET02027	STEERING SERVO HORN F/H/S (3)	$ 2.49
RCET02028	SERVO MOUNT	$ 1.99
RCET02029	4.8 BALL CUP - LONG (6)	$ 4.99
RCET02030	4.8 BALL CUP - SHORT (2-SERVO LINK)	$ 1.99
RCET02034	HEX WHEEL HUBS W/PINS (4)	$ 2.99
RCET02035	SERVO SPACERS	$ 1.49
RCET02036	MOTOR PLATE (RED)	$ 5.99
RCET02037	FRONT HINGE PIN BRACE (RED)	$ 3.99
RCET02038	SLIPPER PAD	$ 4.99
RCET02040	SLIPPER SPRING	$ 1.49
RCET02041	TOP SHAFT SPACER	$ 1.49
RCET02042	FRONT WHEEL AXLE	$ 3.99
RCET02043	SERVO SAVER SHAFT ASSEMBLY	$ 10.99
RCET02044	SERVO SAVER HARDWARE	$ 5.99
RCET02045	3x54 TURNBUCKLE(2)	$ 3.49
RCET02051	IDLER GEAR SHAFT	$ 1.99
RCET02052	TOP SHAFT	$ 22.99
RCET02054	FRONT HINGE PIN OUTER (2)	$ 3.99
RCET02055	REAR HINGE PIN INNER (2)	$ 3.99
RCET02056	FRONT HINGE PIN INNER (2)	$ 3.99
RCET02057	REAR HINGE PIN OUTER (2)	$ 3.99
RCET02059	BALL STUD - LONG (2)	$ 2.99
RCET02060	BALL STUD - SHORT (5)	$ 3.99
RCET02066	FRONT SHOCK BODY SET W/CAPS	$ 6.99
RCET02067	REAR SHOCK BODY SET W/CAPS	$ 6.99
RCET02068	SHOCK PISTON	$ 2.49
RCET02069	SHOCK CARTRIDGE ASSEMBLY	$ 2.49
RCET02071	FRONT SPRING (2)	$ 2.99
RCET02072	REAR SPRING (2)	$ 2.99
RCET02073	SHOCK BLADDER (4)	$ 1.99
RCET02074	REAR BUGGY TIRES WITH FOAMS(2)	$ 12.99
RCET02075	FRONT RIBBED BUGGY TIRES WITH FOAMS(2)	$ 11.99
RCET02076	STOCK BUGGY BODY LEXAN - CLEAR	$ 21.99
RCET02076B	STOCK BUGGY BODY LEXAN - BLUE	$ 24.99
RCET02076R	STOCK BUGGY BODY LEXAN - RED	$ 24.99
RCET02078	10X15X4 OIL BEARING (6)	$ 6.99
RCET02079	5X10X4 OIL BEARING (6)	$ 4.99
RCET02080	BALL BEARING 3X6X2.5 FLANGED (4)	$ 8.99
RCET02081	WASHER 3x7x0.8 (10)	$ 1.99
RCET02082	SCREW SET A	$ 6.99
RCET02083	SCREW SET B	$ 4.99
RCET02084	M3/M4 NUT (6 EACH)	$ 2.99
RCET02085	E-RING 2.3 & 4 E-RING (8 EACH)	$ 2.99
RCET02086	BODY CLIP (8)	$ 1.25
RCET02087	ANTENNA PIPE	$ 1.99
RCET02088	FRONT SHOCK SET BUGGY(2)	$ 14.99
RCET02089	REAR SHOCK SET BUGGY(2)	$ 14.99
RCET02091	TURNBUCKLE	$ 3.49
RCET02093	BALL STUD 4.8 X 11.35 - (5)	$ 5.99
RCET02103	REAR WING - BUGGY	$ 3.99
RCET02104	FRONT A-ARMS (2)	$ 9.99
RCET02105	REAR A-ARMS (2)	$ 9.99
RCET02108	WING MOUNT & BATTERY POST SET	$ 7.49
RCET02114	SPRING CUP/BALL END 5.8 (2)	$ 3.99
RCET02117	UPPER SHOCK BUSHING	$ 2.99
RCET02119	80T SPUR GEAR	$ 3.49
RCET02129	FRONT SHOCK TOWER	$ 4.99
RCET02130	REAR SHOCK TOWER	$ 4.99
RCET02131	BATTERY SPACER - FOAM BATTERY BRACE	$ 3.49
RCET02132	FRONT RIM 2 PCS 2WD BUGGY	$ 7.99
RCET02133	REAR RIM 2 PCS 2WD BUGGY	$ 9.99
RCET02134	SLIPPER HUB (2)	$ 14.99
RCET02135	REAR DRIVE SHAFT ASSEMBLY (2)	$ 29.99
RCET02136	BALL STUD - SILVER (2)	$ 2.99
RCET02137	SHOCK END EYELET 5.8X6 (4)	$ 2.99
RCET02138	3x42.5 FRONT SHOCK SHAFT(2) - 2.3 E-RING(4)	$ 2.49
RCET02139	3x51 REAR SHOCK SHAFT(2) - 2.3 E-RING(4)	$ 2.49
RCET02140	SHOCK ADJUSTER RING	$ 2.99
RCET02147	FRONT CHASSIS ASSEMBLY	$ 7.99
RCET02150	GEAR DIFFERENTIAL CASE	$ 3.99
RCET02151	REAR CHASSIS PLATE (GEAR DIFF)	$ 5.99
RCET02152	52T DIFF GEAR & COVER (GEAR DIFF)	$ 9.99
RCET02153	GEAR DIFFERENTIAL SEAL(1)	$ 1.49
RCET02154	14/28 INTERNAL GEAR SET (GEAR DIFF)	$ 14.99
RCET02155	GEAR DIFFERENTIAL OUTDRIVES(2)	$ 14.99
RCET02156	4.8x1.6 GEAR DIFF O-RING(4)	$ 1.99
RCET02157	GEAR DIFF SHAFT	$ 2.99
RCET02162	RECEIVER BOX	$ 3.49
RCET08802	M2.5X8 SCREW	$ 2.90
RCETU0210	GEAR DIFF CONVERSION KIT 2WD	$ 52.99
RCETU0216	VENTED SLIPPER HUB	$ 29.99
RCETU0218	ALUMINUM SERVO SAVER 2WD	$ 39.99
RCETU0219	ALUMINUM CASTOR BLOCKS 25 DEGREE	$ 34.99
RCETU0220	ALUMINUM CASTOR BLOCKS 30 DEGREE	$ 34.99
RCETU0221	ALUMINUM REAR ARM MOUNTS(2)	$ 19.99
RCETU0222	FRONT BULKHEAD W/2G WEIGHT	$ 18.99
RCETU0223	HINGE PIN PIVOT BALL(8)	$ 5.99
RCETU0224	ALUMINUM SERVO MOUNT	$ 14.99
RCETU0225	ALUMINUM 12MM HEX HUB	$ 14.99
RCETU0227	ALUMINUM REAR BRACE MOUNT W/20G WEIGHT	$ 39.99
RCETU0229	ALUMINUM FINNED MOTOR PLATE	$ 14.99
RCETU0230	HARD SPRING SET F&R(4)RTR	$ 5.99
RCETU0231	MEDIUM SPRING SET F&R(4)RTR	$ 5.99
RCETU0232	SOFT SPRING SET F&R(4)RTR	$ 5.99
RCETU0236	ALUMINUM REAR HUB CARRIERS 0D	$ 34.99
RCETU0237	ALUMINUM REAR HUB CARRIERS 1D	$ 34.99
RCETU0239	CARBON FIBER REAR CHASSIS PLATE (BALL DIFF)	$ 34.99
RCETU0240	CARBON FIBER BUGGY FRONT SHOCK TOWER	$ 24.99
RCETU0242	CARBON FIBER BUGGY REAR SHOCK TOWER	$ 29.99
RCETU0248	ALUMINUM FRONT CAMBER LINK MOUNT	$ 34.99
RCETU0254	12MM HEX HUB - 4MM OFFSET	$ 14.99
RCETU0276	86T KEVLAR GEAR	$ 6.99
RCETU0277	80T KEVLAR SPUR GEAR	$ 6.99
RCETS2031	28T IDLER GEAR ALUMINUM	$ 9.99
RCESGSL3000	3000KV SENSORLESS BL 540 MOTOR	$ 49.99
RCESGS6	6 KG METAL GEAR SERVO.18 - 83OZ	$ 24.99
RCETG2025C	PLASTIC SHOCK CAPS(4)	$ 3.99
RCETSTB2F	PREMOUNTED FRONT TIRES & WHEELS 2WD BUGGY	$ 16.99
RCETSTB2R	PREMOUNTED REAR TIRES & WHEELS 2WD BUGGY	$ 19.99

CompetitionX
A WEB SITE FOR THE SERIOUS RACER

RACERS EDGE

Buggy - Setup Sheet

Driver _____

Track / City _____

Event _____ *Date* _____/_____/_____

Conditions

☐ Smooth ☐ Bumpy ☐ Low traction ☐ Med traction

☐ High traction ☐ Sandy ☐ Soft dirt ☐ Grass ☐ Hard soil

☐ Clay ☐ Wet ☐ Dry ☐ Dusty ☐ Other

Front Suspension

Shock Mounting&Camber link

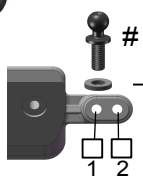

Camber _____°

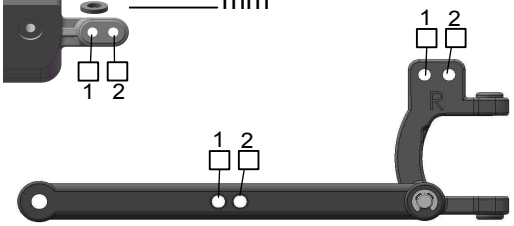

Toe-in (+)/Out (-)_____°

Bump Steep Spacer_____

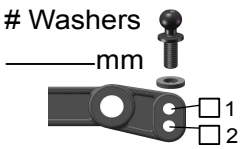

Ride height _____

Front Shocks

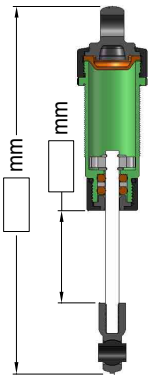

Spring(color)
☐ Black
☐ _____

Oil _____ wt

Piston #_____

Rear Suspension

Shock Mounting&Camber link

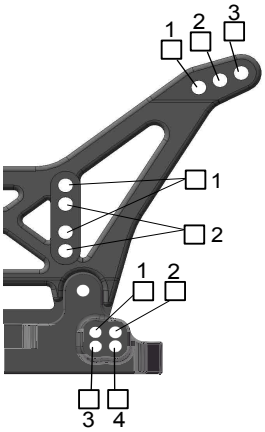

Wheelbase
☐ Long
☐ Medium
☐ Short

Camber _____°

Normal

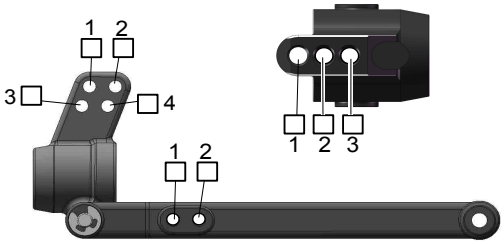

Aluminum(Opt)

Washers
_____mm

Ride height _____

Rear Shocks

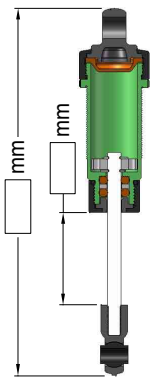

Spring(color)
☐ Black
☐ _____

Oil _____ wt

Piston #_____

Diff

Brand _____

Oil wt _____

Front Tires&Wheels

Front Tires _____

Inserts _____ Wheels _____

Front Tires&Wheels

Front Tires _____

Inserts _____ Wheels _____

Batteries

Servo _____

Esc _____

Batteries _____

Motor

Motor _____

Pinion/Spur _____/_____

Other

Wing _____

Wing Angle ☐ 4° ☐ 10°

ConfigurationX
A WEB SITE FOR THE SERIOUS RACER

Comments

Notes _____