INSTRUCTION MANUAL

1/5th Scale AWD Gasoline Power Off-road Buggy and Monster Truck

A .OFF-ROAD BUGGY

B. MONSTER TRUCK

CompetitionX
A WEB SITE FOR THE SERIOUS RACER

Notes:

- The radio controlled racing models is not toy. It is suited for experienced operators.Read and understand the instructions carefully before operating or assembling your racing model.
- Specifications are subject to change without prior notice, and actual received model may vary from the images and/or descriptions in this manual.

CE ROHS

This manual contains all the basic instructions for assembly, operation, and maintenance.Please read and understand all instructions thoroughly before operating and building your model.

Features:

1.High quality main/diff.gears .
2.Four wheel centre drive system.solid universal joint cups.high performance full ball bearing.
3.Fiberglass brake disc provides quick brake response under high temperature.
4.Wheel rim is assembled and secured by 24 screws enable the tire and wheel rim are not seperated while high speed running.
5. Fold stylish and solid full anodized aluminum 6061chassis.
6. New design solid roll Cage protects the inner instruction perfectly.
7.Perfect design and extra width front/rear suspension arm .
8.Powerful engine system with air filter.full aluminm polished Exhaust pipe.
9.Enhanced suspension arm system,solid front/rear shock tower.
10.High quality unleaded Gasoline+Stroke oil mixture to start your engine.
11.Stylish off road wing .(for Buggy only)

Important Safety Precautions

- Replace the shield body after adjustment and before driving.
- Do not abruptly alter the speed during running.
- Carefully check whether all screws or nuts are loose or not after running.
- Handle the fuel only outdoors!
- Never measure the fuel close to open fire or any source of heat.
- Never run the vehicle without a clean air filter installed.
- Do not run the model lean and do not allow the engine to overheat.
- Use the special fuel for models.
- Store fuel in cool,dry and dark places away from Children's reach!
- Tighten the cap of the fuel bottle when not used.
- Never throw the empty fuel bottle into fire! Otherwise,it may explode.
- Do not put your finger or any object into the rotating or moving parts.
- To avoid the danger of burns, do not touch the engine and muffler immediately after they have stopped running.

Before Starting Your Vehicle

- Verify that all retainers are well fastened (screws, nuts, bolts and clips)
- Verify proper function of steering, drive-line and engine/braking control.

Specifications:(off-road Buggy)

1.Engine:23/28CC PRO
2.Steering Servo:27KG-cm Throttle Servo:9KG-cm
3.Length:720mm
4.Width:490mm
5.Height:285mm
6.Net Weight:12KG. Gross Weight:16.9KG
7.Wheelbase:516mm(F/R)
8.Drive way:upright drive
9.Chassis:4mm thickness. Aluminum6061T6
Ground Clearance:55mm
10.Wheel Diameter/Width:178mm /80mm
Wheel color:black&white;chrome plated
11.Fuel Tank Capacity:700CC
12.Drive System:four wheel suspension drive system
13.Diffirential System:CNC process metal gear
14.Brake Syetem:double brake disc turn round sytem
15.Gear Ratio:7.78:1
16.Receiver battery/charger:1500/2000mAh,Ni-MH battery
17.Body:anti-explode,high resistance
18.Camber Angel:0-8 ℃
19.R/C Control System:FM /AM LCD Transmitter
20.out of Control protection:standard protection equip

Specifications:(off-road Monster Truck)

1.Engine:23/28CC PRO
2.Steering Servo:27KG-cm Throttle Servo:9KG-cm
3.Length:740mm
4.Width:600mm
5.Height:350mm
6.Net Weight:15KG. Gross Weight:20.5KG
7.Wheelbase:516mm(F/R)
8.Drive way:upright drive
9.Chassis:4mm thickness. Aluminum6061T6
Ground Clearance:72mm
10.Wheel Diameter/Width:212mm/140mm
Wheel rim color:black&white;chrome plated
11.Fuel Tank Capacity:700CC
12.Drive System:four wheel suspension drive system
13.Diffirential System:CNC process metal gear
14.Brake Syetem:double brake disc turn round sytem
15.Gear Ratio:7.78:1
16.Receiver battery/charger:1500/2000mAh,Ni-MH battery
17.Body:anti-explode,high resistance
18.Camber Angel:0-8℃
19.R/C Control System:FM/AM LCD Transmitter
20.out of Control protection:standard protection equip

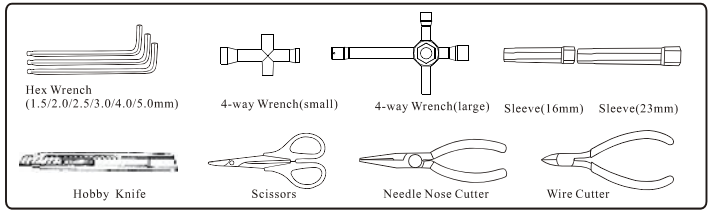

Engine View

Note:The engine is sticked with warning labels, please pay special attention on it . The image is presented for your reference only.

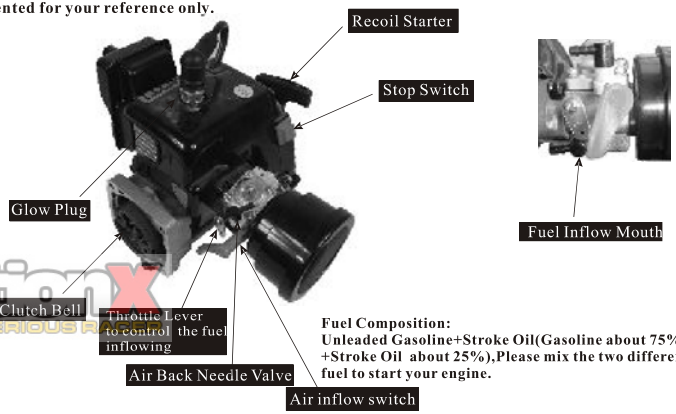

Fuel Composition:
Unleaded Gasoline+Stroke Oil(Gasoline about 75% +Stroke Oil about 25%),Please mix the two different fuel to start your engine.

Competition X
A WEB SITE FOR THE SERIOUS RACER

Use Transmitter to control your Vehicle...

1/5th scale Gasoline powered RTR model Transmitter has 2 styles, LCD Transmitter(FM)&Multifunctional Transmitter(AM).you can choose it.Below is the LCD Transmitter(FM) function description.

#TR80127
LCD 2-Channel(FM)

#TR80126
Multifunctional
2-Channel(AM)

Battery Precaustions:

1.In order to keep continue better performance under operations, we strongly recommend you to use the 1.5V alkaline batteries instead of the 1.2 V chargeable batteries.eight AA battery should be inserted on the bottom of the transmitter.
2.The batteries may leak in the event that they are installed with wrong polarities.
3.Do not use batteries of different types.
4.Do not leave the batteries if not in use for long periods.

LCD Transmitter(FM)Function Description:

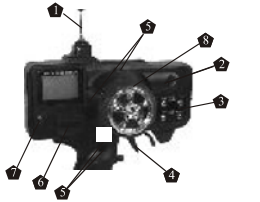

The function switches on the transmitter:

1.Antenna
2.Switch key
3.Four function Key:
Mode Channel
Increase Decrease
4.Throttle Trigger
5.T1/T2/T3/T4:
Shortcut key
6.Power switch on(push up)
Power switch off(push down)
7.Working Indicator
8.Steering Wheel

⚠Caution!
Make sure antenna is properly inserted and screwed in the transmitter.Antenna should be fully extended

Throttle Trigger

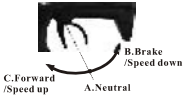

1.Push the trigger forwards to allow the vehicle to speed down to brake.
2.Pull the trigger backwards to allow the vehicle to go forward and speed up.

Steering Wheel

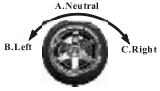

Turn the steering wheel to the left or right to let the vehicle turn left or right.

Switch on the transmitter,then the receier to start the engine;turn off the receiver then the transmitter to stop running engine.

The 1/5th transmitter has two different setting way.Push up the power button,will enter into common function set.Press the mode fuction key while pushing up the power button, up the power button,will enter into the system function set.

Common Function Setting:

1.The throttle trigger and steering wheel must be in netural position before reading the figure.
2.EPA:
a.EPA-ST : front wheel steering set b.EPA-TH:brake or forwarding operation set.
3.SPD:
a.SPD-TN: steering speed set b.SPD-RN:return to netural position set
4.EXP:(sensibility adjustable range:-100%~+100%;-100% is low-grade,+100% is superior.)
a.EXP-ST:steering sensibility set. b.EXP-FW:forward sensibility set
c.EXP-BK:brake sensibility set.
5.ABS:(anti-slip brake set)
a.ABS-PT:brake return speed set. b.ABS-CY:perform cycle set
c. ABS-DL:extend brake time set d.ABS-MD:off or on set
6.ACC:
a.ACC-FW:add forward speed set b.ACC-BW:add brake speed set
7.BMX: brake function mix set
8.TRM:(idle position adjust)
a.TRM-ST:steering trim set b.TRM-TH:forward trim set
9.D/R
a.D/R steering rate set b. D/R-ST:steering angle set
10.ATL
a.brake intensity set b.ATL-BK:set the brake intensity solely(adjusting brake servo angel)
11.SBT:(two channel idle position set)
a.SBT-ST:steering trim set b.SBT-TH:forward trim set
12.REV:
a.REV-ST:steering reverse set(off/on) b.REV-TH:forward reverse set(off/on)
13.MODE SEL:can save 10 models control data.

System Function Setting:

1.Copy mode control data
2.Mode control data initialization
3.Each mode control data name set.
4.Signal output set(PPM mode only)
5.FNC-SW2:switch key
6.FNC-DT:
a.ST:steering trim adjust b.TH:throttle trim adjust
c.DR:steering control rate DR-ST adjust
d:AT:ATL-BK adjust e.E1:steering EXP-ST adjust f.BK:BMX-RT adjust
7.LED-MD:LED bright adjustment.press the increase or decrease to change light brightness.

2-Channel Radio Transmitting System

Please read the instructions for the radio system carefully before running your car.
The servo is required to be set at Center position before starting assembly. To set the servo at the Idle (Neutral) position switch on the transmitter and receiver. Allow the servo trim arm at Center position, and turn off the transmitter then the receiver.All debug operations are complete, and the servo is in the Middle position that you expect.

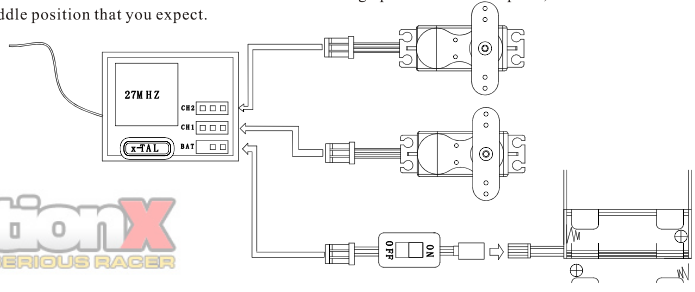

CompetitionX
A WEB SITE FOR THE SERIOUS RACER

The assembly diagram all in common use unless special remark

Diff. Box Exploded View

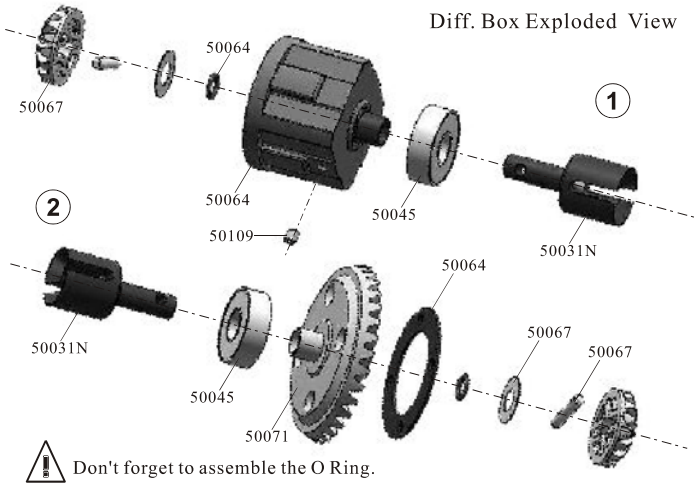

Don't forget to assemble the O Ring.

Diff.Gear Exploded View

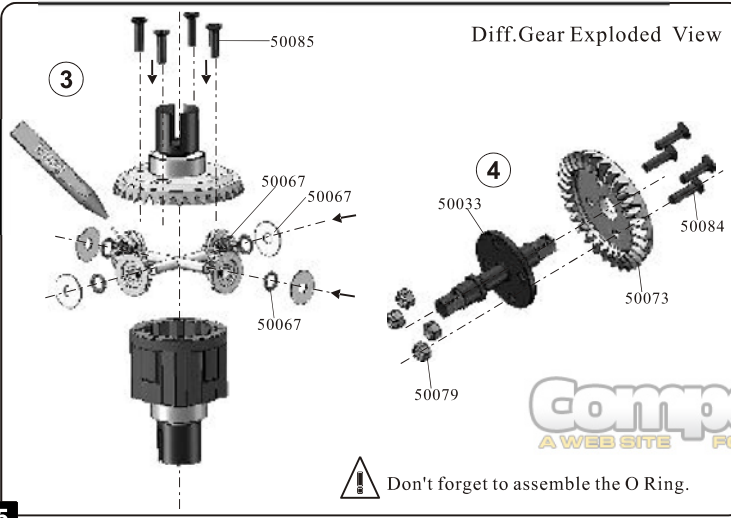

Don't forget to assemble the O Ring.

Front Gear Box Exploded View

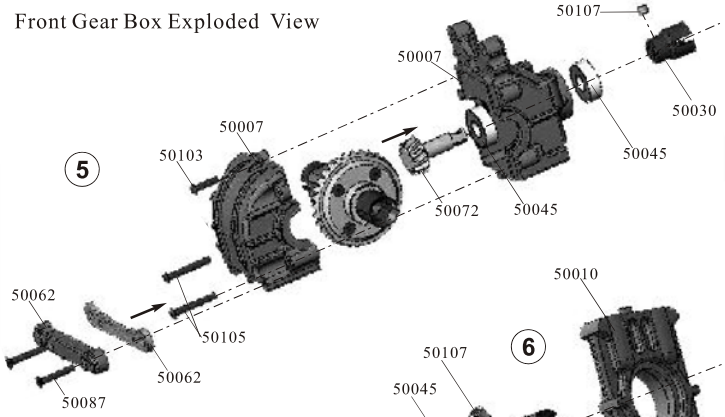

Center Diff.Gear Exploded View

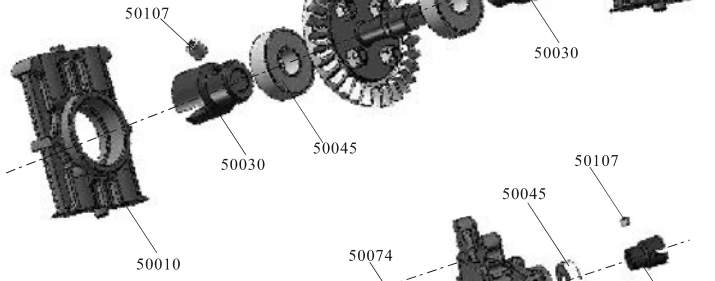

Rear Gear Box Exploded View

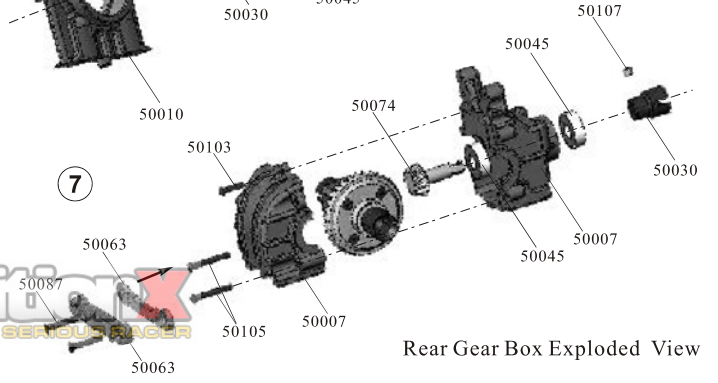

CompetitionX
A WEB SITE FOR THE SERIOUS RACER

Steering Complete Assembly

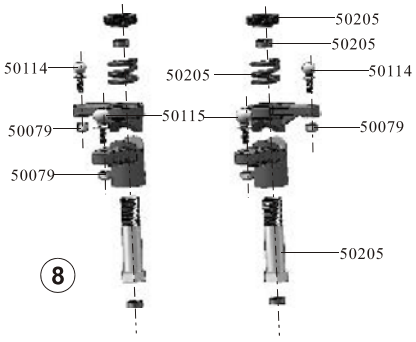

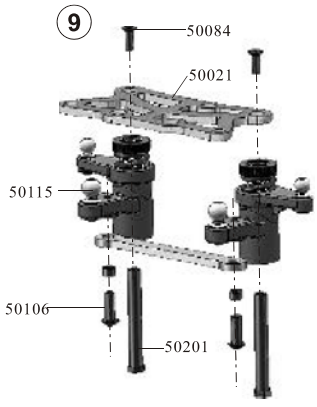

Front Upper Suspension Arm

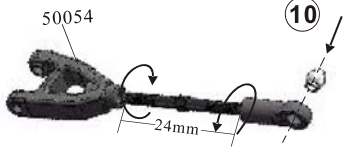

Steering Link

Servo Link

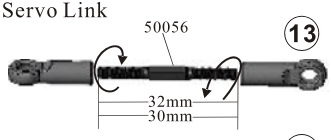

Rear Upper Suspension Arm

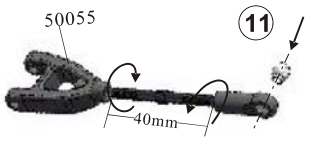

Rear Hub Carrier

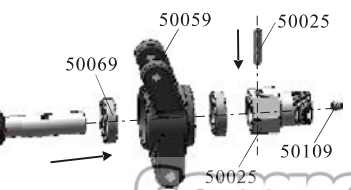

Front Hub Carrier

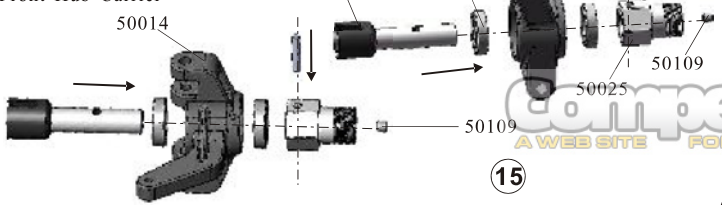

Competition
A WEB SITE FOR THE SERIOUS RACER

Front Upper Suspension Arms Assembly

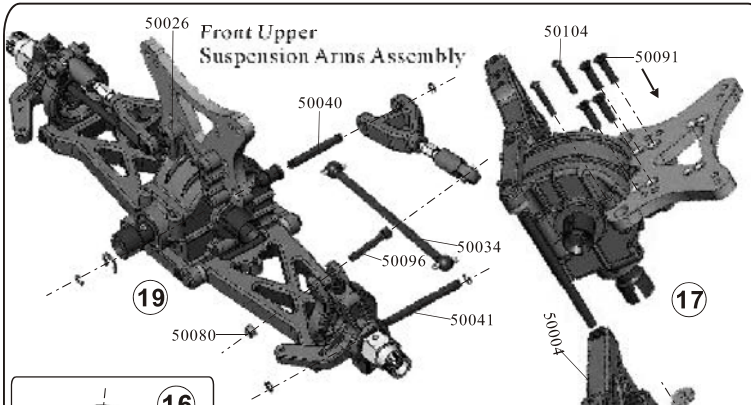

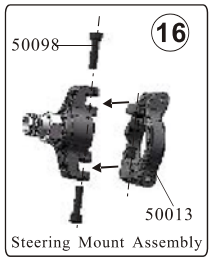

Front Lower Suspension Arms/Shock Tower Assembly

Rear Lower Suspension Arms/Shock Tower Assembly

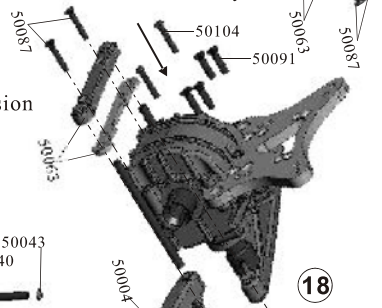

Rear Upper Suspension Arms Assembly

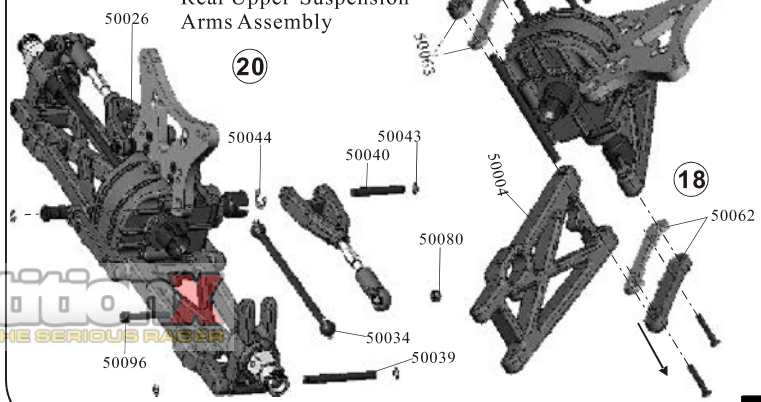

Front body post Assembly

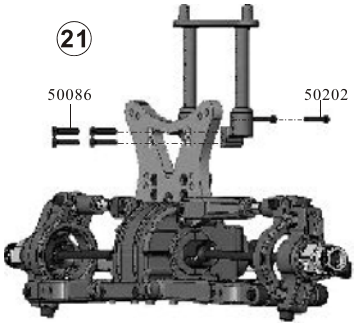

Rear body post Assembly

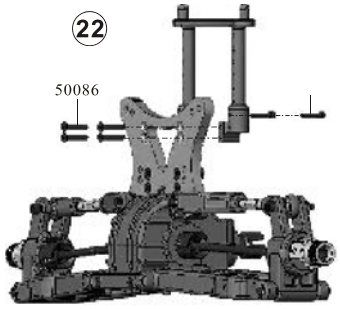

Rear Shock Absorber Assembly

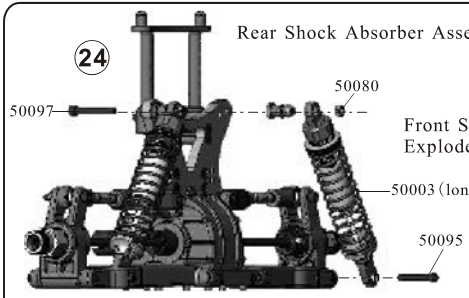

Front Shock Absorber Exploded View (short)

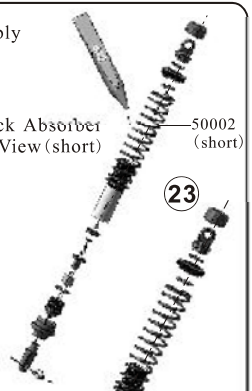

Front Shock Absorber Assembly

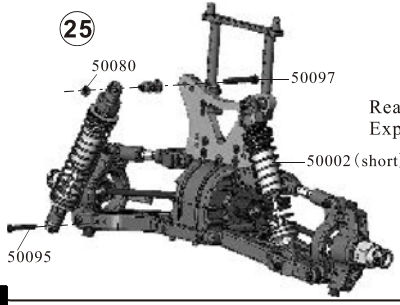

Rear Shock Absorber Exploded View (long)

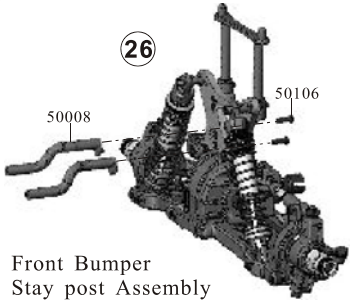

Front Bumper Stay post Assembly

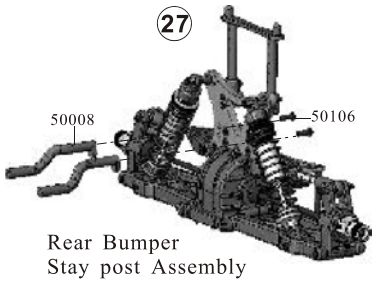

Rear Bumper Stay post Assembly

Servo Unit Exploded View

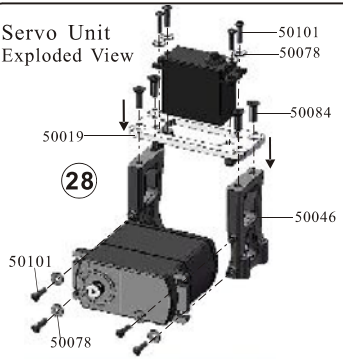

Battery Case Exploded View

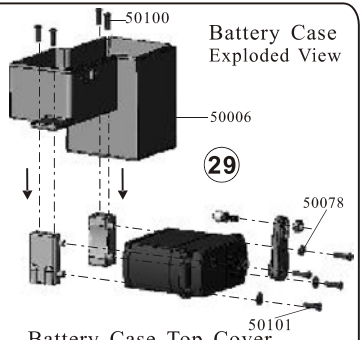

Brake Disc Assembly

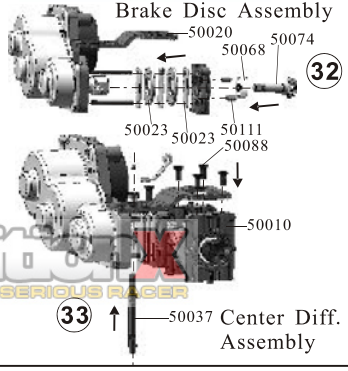

Center Diff. Assembly

Battery Case Top Cover Assembly

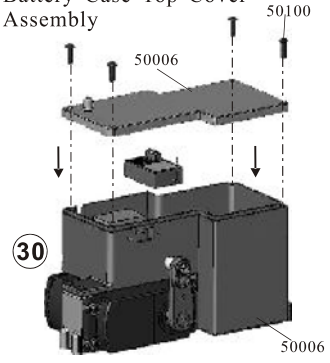

Competition
WEB SITE FOR THE SERIOUS RACER

Diff. Gear Mount Assembly

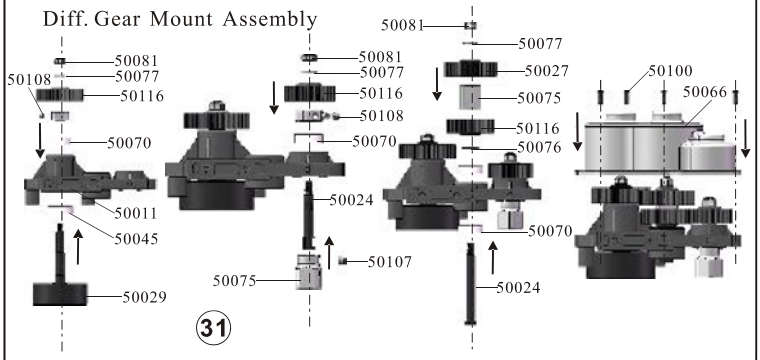

31

Front Unit Assembly

34

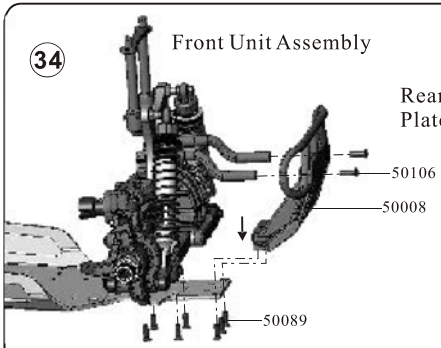

Rear Unit Reinforced Plate Assembly

35

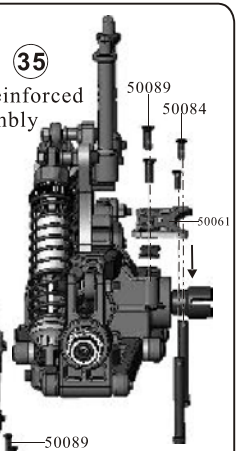

Rear Unit Assembly

37

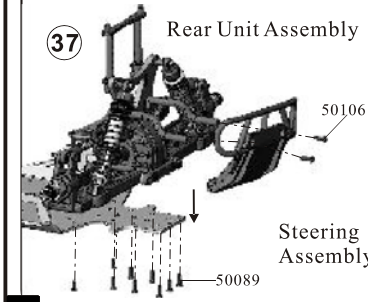

Steering Complete Assembly

36

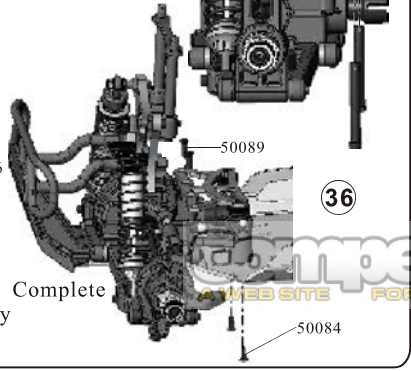

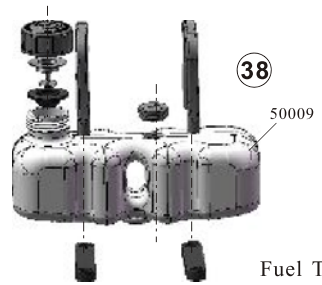

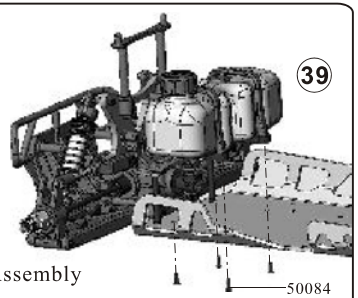

Fuel Tank Assembly

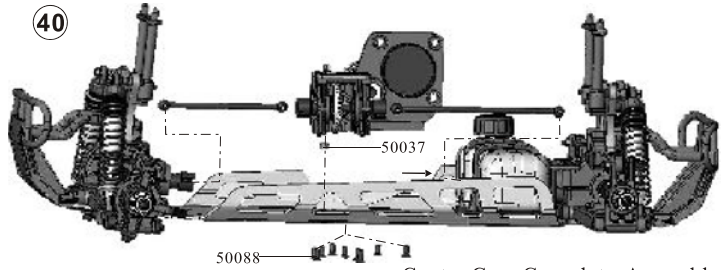

Centre Gear Complete Assembly

Servo Assembly

42

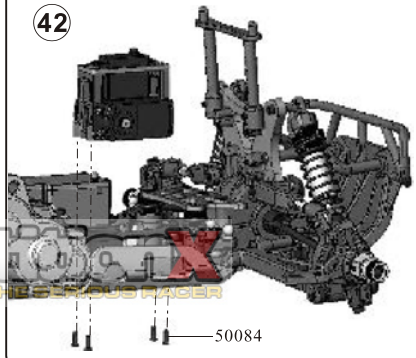

Battery Case Assembly

41

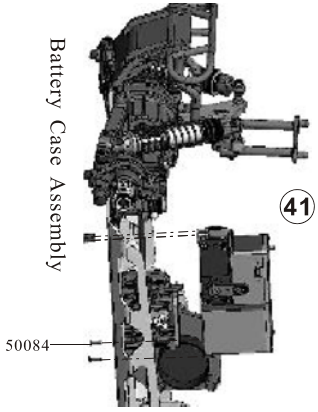

A WEB SITE FOR THE SERIOUS RACER

Front Brace Assembly

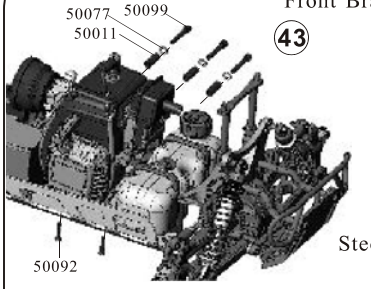

43

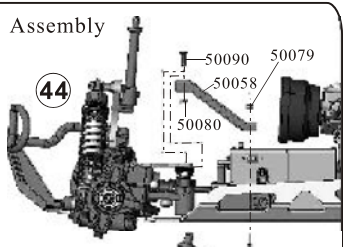

44

Steering Link Assembly

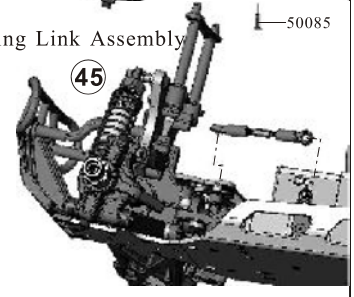

45

Engine Assembly

46

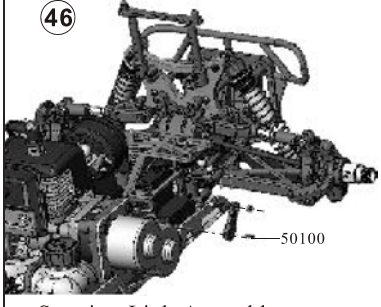

Steering Link Assembly

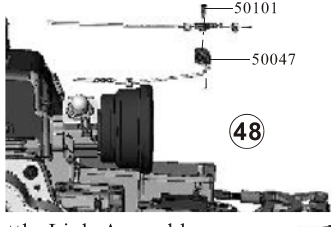

48

Thottle Link Assembly

47

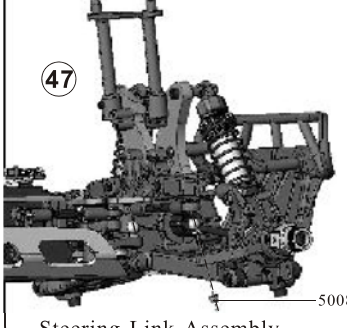

Steering Link Assembly

Dustproof Plate Assembly

49

Roll Cage Exploded View

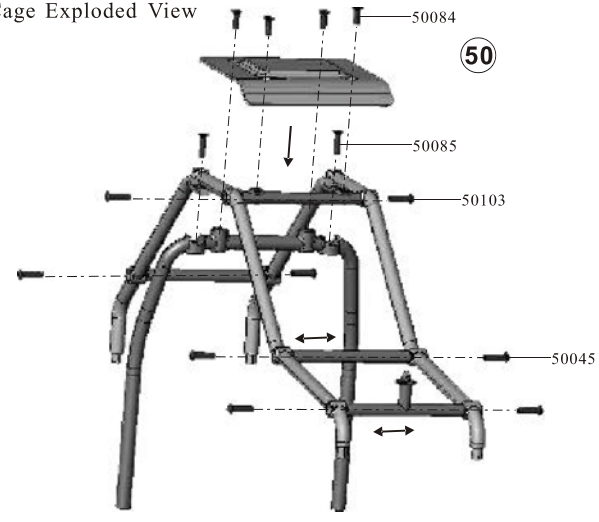

50

Roll Cage Assembly

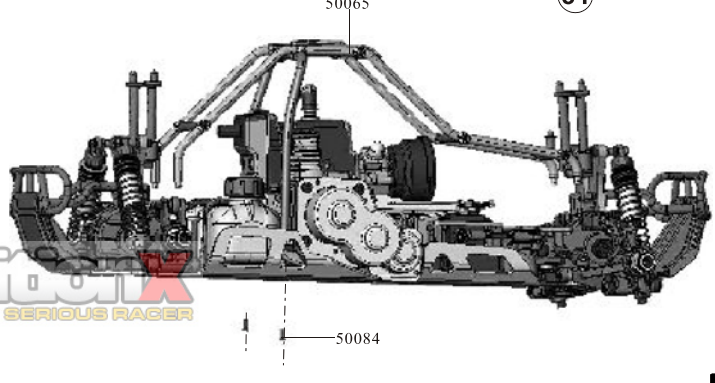

51

competitionX
A WEB SITE FOR THE SERIOUS RACER

Exhaust Pipe Assembly

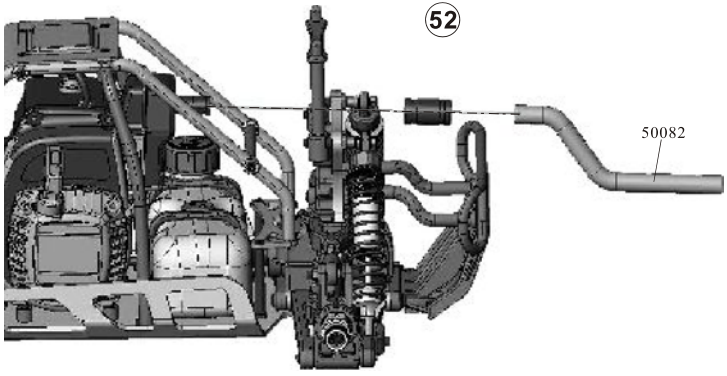

Wheels Complete Assembly (Monster Truck)

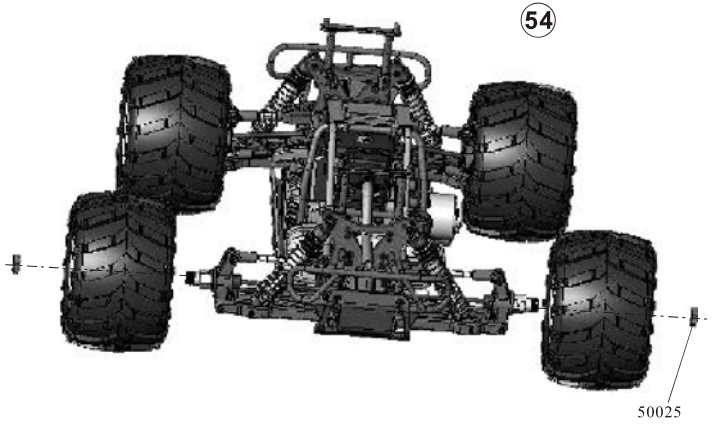

Truck Wheels Complete Exploded View (L/R)

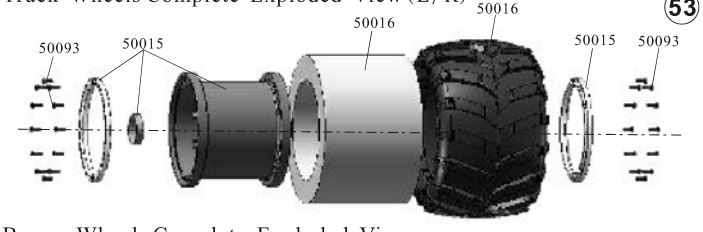

Buggy Wheels Complete Exploded View

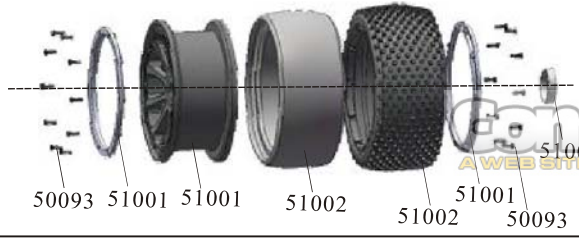

Body Complete Assembly (Monster Truck)

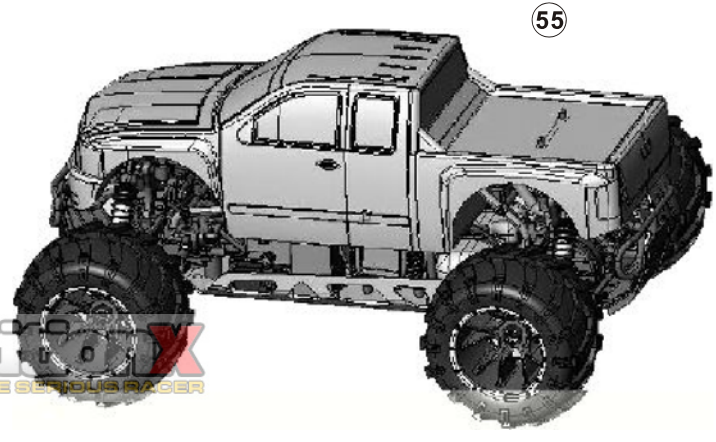

Competition X
A WEB SITE FOR THE SERIOUS RACER

Front Unit Assembly (Buggy)

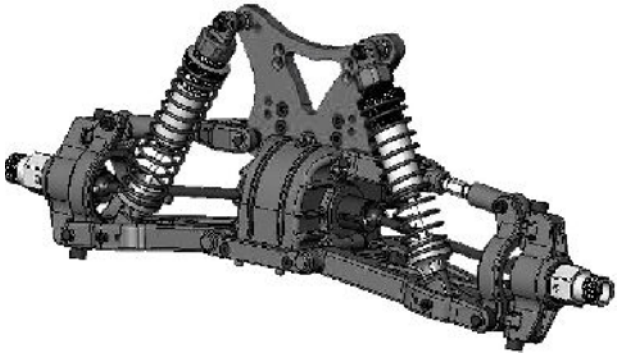

New Style Assembly (Buggy)

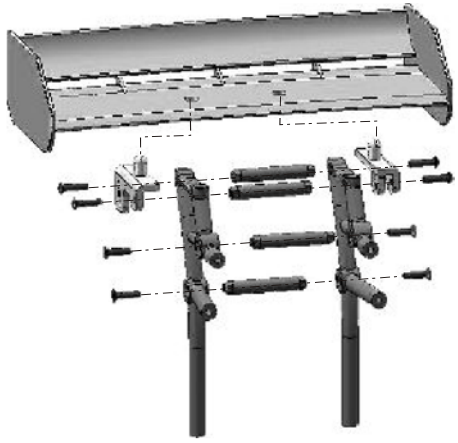

Rear Unit Assembly (Buggy)

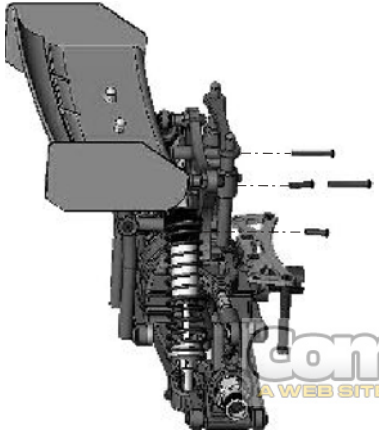

Off-road Buggy

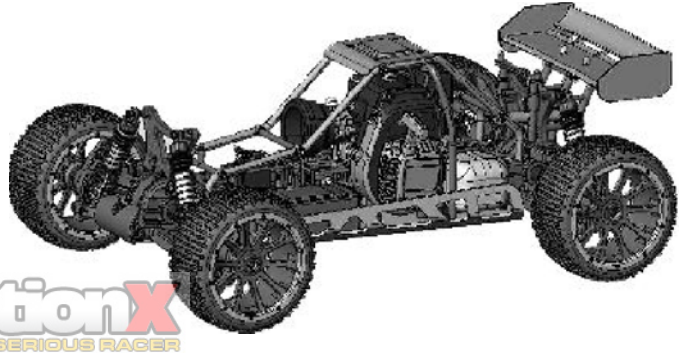

CompetitionX
A WEB SITE FOR THE SERIOUS RACER

Aluminum Centre Diff.Gear Assembly(for Optional Use)

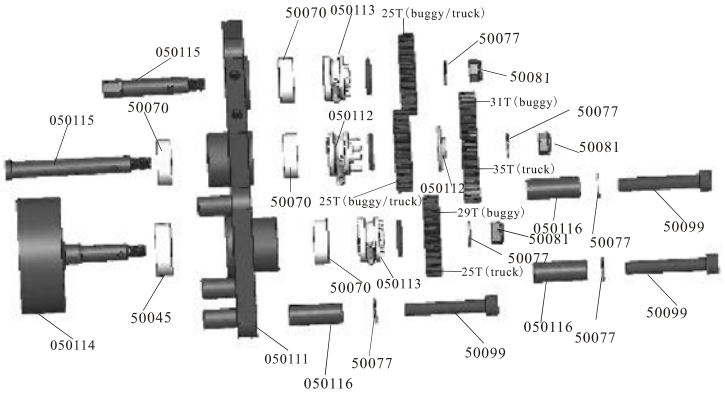

050109(Truck)-Alum.Centre Diff Mount Set 051030(Buggy)-Alum.Centre Diff Mount Set 	050108(Truck)-Alum.Gear (25T/35T/25T/25T) 051040(Buggy)-Alum.Gear (25T/31T/29T/25T) 	050111-Diff.Gear Mount 	050112-Diff.first way shaft mount
050113-Diff.Second Shaft mount 	050114-Clutch Bell 	050115-Diff.First Way Shaft+ Diff.Second Way Shaft 	050116-Pins 3P
50099-Column Head Mechnical Screw(6*40) 4P 	50070-Ball Bearing(22*8*7) 4P 	50077-Second Way Gear Washer 6*12*1.5MM 6P 	50081-Nuts(M6) 6P

A WEB SITE FOR THE S

Engine Diagram(25CC)

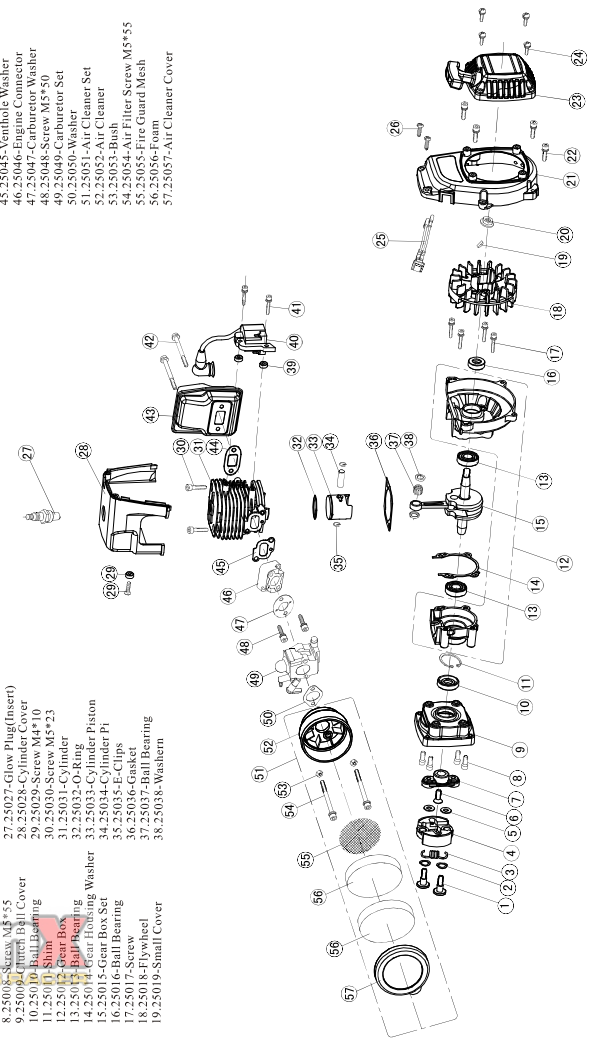

1.25001-Screw
2.25002-Washer
3.25003-Spring
4.25004-Friction
5.25005-Washe
6.25006-Screw
7.25007-Clutch
8.25008-Screw M5*55
9.25009-Clutch Bell Cover
10.25010-Ball Bearing
11.25011-Shim
12.25012-Gear Box
13.25013-Ball Bearing
14.25014-Gear Housing Washer
15.25015-Gear Box Set
16.25016-Ball Bearing
17.25017-Screw
18.25018-Flywheel
19.25019-Small Cover
20.25020-Nut
21.25021-Fan Cover
22.25022-Screw M5*20
23.25023-Pull Start Set
24.25024-Screw M4*16
25.25025-Power-off Switch
26.25026-Screw
27.25027-Glow Plug(Insert)
28.25028-Cylinder Cover
29.25029-Screw M4*10
30.25030-Screw M5*23
31.25031-Cylinder
32.25032-O-Ring
33.25033-Cylinder Piston
34.25034-Cylinder Pi
35.25035-E-Clips
36.25036-Gasket
37.25037-Ball Bearing
38.25038-Washern
39.25039-Washer
40.25040-Glow Plug Igniter
41.25041-Screw(M4*18)
42.25042-Screw(M5*45)
43.25043-Silencer
44.25044-Exhaust Pipe Washer
45.25045-Venthole Washer
46.25046-Engine Connector
47.25047-Carburetor Washer
48.25048-Screw M5*50
49.25049-Carburetor Set
50.25050-Washer
51.25051-Air Cleaner Set
52.25052-Air Cleaner
53.25053-Bush
54.25054-Air Filter Screw M5*55
55.25055-Fire Guard Mesh
56.25056-Foam
57.25057-Air Cleaner Cover

Off-road Monster Truck& Buggy Common Parts-1

50001N-Chassis 1P	50002N-Front Shock Absorber(short) 2P	50003N-Rear Shock Absorber(long) 2P	50004N-Front Lower Suspension Arm 2P
50005N-Rear Lower Suspension Arm 2P	50060-Battery/Receiver Case 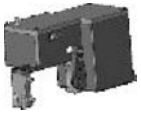 1P	50006N-Battery/Receiver Case 1P	50009N-Fuel Tank(700CC) 1P
50010-Center Diff.Mount 2P	50011-Centre Diff. Mount Set 1P	50205-Servo Saver/Steering Complete 1P	50012-Servo Saver/Steering Complete 1P
50013-Steering Mount(L/R) 1P	50014-Steering Mount B 2P	50007N-Gear Box 1P	50019-Servo Top Mount 1P
50020-Radio Tray 1P	50021-Front Upper Top Plate 1P	50022-Deck Spacer + Countersunk Screw 2P	50023-Brake Discs+Pads +Pins 1P
50024-Diff.First Way Shaft +Second Way Shaft 1P	50025- Wheel Mount+Nut +Shaft 1P	50201-Buffer post 4P	50026-F/R Shock Tower+ Susp.Arm Bush+E Clip 1P

Off-road Monster Truck& Buggy Common Parts-2

50027-Diff. Gear(35T) 1P	50029N-Clutch Bell Bush 1P	50030-Centre Dogbone Joint Cup 2P	50031N-Diff. Joint Cups 2P
50032-Front/Rear Wheel Axle 2P	50033-CenterDiff. Shaft +Washers 1P	50034- Front/Rear Dogbones 135MM 2P	50035-Centre Diff.Front Dogbone(Long) 172MM 1P
50036-Centre Diff. Rear Dogbone(Short)125MM 1P	50037-Brake Cam Set 1P	50038-Front/Rear Lower Arm Pins 6*94MM 4P	50039-Rear Lower Arm Pins 6*61MM 2P
50040-Front/Rear Upper Arm Pins 6*45MM 4P	50041-Front Lower Arm Pins 6*65MM 2P	50043-Sus. Arm E- Clips ϕ 4.0 8P	50044-Shock Tower Arm E- Clips ϕ 8.0 8P
50045-Ball Bearing(26*10*8) 6P	Sp2701-Steering Servo(27kg) 1P	Sp2001- Throttle Servo(20kg) 1P	Sp1301- Throttle Servo(13kg) 1P
50046-Servo Mount(L/R) 2P	50047-Servo horn and Throttle Linkage Set 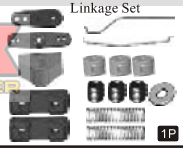 1P	50049-Steering Link 2P	50051-Chargeable Battery Pack(6V 2000MA) 1P

RCMotorsportsX
A WEB SITE FOR THE SERIOUS RACER

Off-road Monster Truck& Buggy Common Parts-3

81013-Body Clips 6P	50052-Engine 23 CC PRO 1P	50053-Glow Plug 1P	50054-Front Upper Suspension Arms 2P
50055-Rear Upper Suspension Arms 2P	50056-Servo Link 1P	50057-Body Post 1P	50058N-Front Brace 1P
50059-Rear Hub Carrier 2P	50061-Rear Reinforcement Plate 1P	50062-Front Sus.Arm Holder 1P	50063-Rear Sus.Arm Holder 1P
50064-Front/Rear Diff.Shell Set 1P	50065-Roll Cage 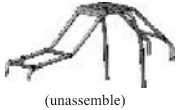 (unassemble) 1P	50066-Diff. Gear Cover 1P	50067N-Front/Rear Diff. Gear Set 1P
50068-Ball Bearing(22*10*7) 3P	50069-Ball Bearing(24*12*6) 8P	50070-Ball Bearing(22*8*7) 4P	50071-Front /Rear Crown Gear(33T) 1P
50072-Front/Rear Drive Pinion(11T) 1P	50073-Diff.Crown Gear (30T) 1P	50074-Diff.Drive Pinion (10T) 1P	50075-Centre Diff. Gear Set 1P

Off-road Monster Truck& Buggy Common Parts-4

50076-First Way Gear Washer ϕ 8*15*1.5MM 4P	50077-Second Way Gear Washer ϕ 6*12*1.5MM 6P	50078-Servo Washers ϕ 3*8*0.8MM 9P	54031-Nuts(M3) 6P 6P
50079-Nuts(M4) 9P	50080-Nuts(M5) 9P	50081-Nuts(M6) 6P	50112-Front Sus.Arm Ball ϕ 10MM 4P
50113-Rear Sus.Arm Ball ϕ 11MM 4P	50114-Servo Link Ball ϕ 8MM 4P	50115-Steering Link Ball ϕ 10MM 4P	50107-Hex Head Grub Screw(6*6) 8P
50108-Hex Head Grub Screw(5*5) 8P	50109-Hex Head Grub Screw(4*4) 8P	50110- Hex Head Grub Screw(3*3) 8P	50111-Hex Head Grub Screw(5*10) 4P
50101-Cap Head Mechnical Screw(3*12) 12P	50103-Cap Head Mechnical Screw(4*15) 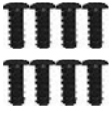 8P	50104-Cap Head Mechnical Screw(4*25) 4P	50105-Cap Head Mechnical Screw(4*30) 4P
50106-Cap Head Mechnical Screw(5*15) 10P	50084-Countersunk Mechnical Screw (4*12) 12P	50085-Countersunk Mechnical Screw(4*16) 12P	50086-Countersunk Mechnical Screw(4*20) 8P

CompetitionX
A WEBSITE FOR THE SERIOUS RACER

Off-road Monster Truck& Buggy Common Parts-5

50087-Countersunk Mechnical Screw(4*25) 8P	50088-Countersunk Mechnical Screw (5*12) 12P	50089-Countersunk Mechnical Screw(5*15) 12P	50090-Countersunk Mechnical Screw(5*18) 4P
50091-Countersunk Mechnical Screw(5*20) 8P	50092-Countersunk Mechnical Screw(5*25) 4P	50093-Column Head Hex. Self-tapping Screw(3*11) 12P	50202-Column Head Hex. Self-tapping Screw(3*16) 12P
50095-Column Head Mechnical Screw(4*30) 4P	50096-Column Head Mechnical Screw(5*30) 4P	50097-Column Head Mechnical Screw(5*35) 6P	50098-Column Head Mechnical Screw(6*25) 8P 8P
50099-Column Head Mechnical Screw(6*40) 4P 4P	50100-Cap Head Mechnical Screw(3*10) 8P 8P	50203-Cap Head Mechnical Screw(3*5) 8P 8P	50008N-Front/Rear Bumper 1P
50015-Wheel Rims Complete 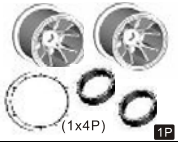 (1x4P) 1P	50016-Tires 2P	50017-Wheels Complete (50015+50016) 2P	50082- Exhaust pipe+ Silicone Joint Tubing 1P
50117-Servo Mount(L/R) 50117/50118 can be used on FUTABA/SANWA/HITECH/KO Brand Steering&Throttel Servo 1P	50118-Servo Horn 1P	50116-Diff. Gear(25T) 3P	

Competition
A WEB SITE FOR THE SERIOUS RACER

Spare Parts for Off-road Buggy(A)

51001-Wheels Rim Complete 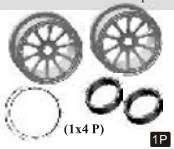 (1x4 P) 1P	51002-Tires 2P	51003-Wheels Complete 2P	51004-Diff.Gear A(31T) 1P
51005-Diff.Gear B(29T) 1P	51006-Front Bumper 1P	51007-Tail Wing Stay(L/R) +joint Post 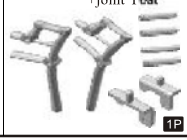 1P	51009-New Style Wing +Wing Button 1P

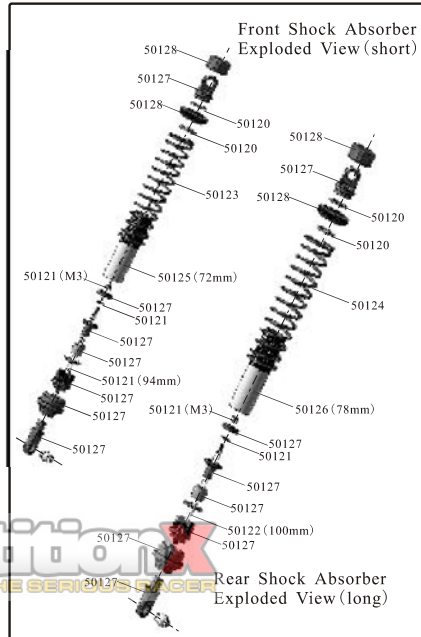

50120-O-Ring	50121-Front shock main Axle+Nut M3 +Pads (94mm) 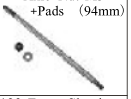
50122-Rear shock main Axle+Nut M3 +Pads (100mm) 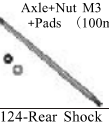	50123-Front Shock spring (short)
50124-Rear Shock spring (long)	50125-Shock Body (72mm)
50126-Shock Body (78mm)	50127-Shock Plastic Parts
50128-Shock Absorber Cap+Ball Mount	

Upgradable Optional for Monster Truck& Buggy

054001-Front Lower Suspension Arm (AL.) 2P	054002-Rear Lower Suspension Arm (AL.) 2P	054003-Center Diff.Mount (AL.) 2P	054004-Gear Mount (AL.) 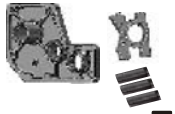 1P
054007-Sus.Arm short Holder(F/R) (Direct hole) (AL.) Adjust angel(center&two side) 1P	054008-Sus.Arm long Holder(R) (Inside bevel hole) (AL.) Adjust angel(center&two side) 1P	054009-Front Shock Absorber(short) (AL.) 2P	054010-Rear Shock Absorber (long) (AL.) 2P
050008N-Front brace (AL.) 1P	054012 -Servo Top Mount (AL.) 1P	054013-Center Diff.Tray (AL.) 1P	050037N-Rear Reinforcement Plate (AL.) 1P
050038N-Front Upper Top Plate (AL.) 1P	050022W-F/R Shock Tower (AL.) 1P	050014-Servo Saver/Steering Complete 1P	054018-Steering Mount (AL.) 2P
050050-Servo Saver/Steering Complete (AL.) 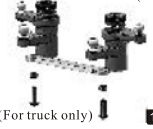 (For truck only) 1P	050061-Center Dogbone 125mm (AL.) 2P	050062-Center Dogbone 172mm (AL.) 2P	050032-Fuel Tank Cover (AL.) 1P
050100-Fuel Pipe Bush 1P	050034-Engine Cover (AL.) 1P	050033-Engine Recoil Star (AL.) 1P	VX28000-Engine(28CCPRO) 1P

Upgradable Optional for Monster Truck& Buggy

050028-Air Filter (AL.) 1P	050040-Air Filter (AL.) 1P	050031-Wheel Hex (AL.) 1P	050029-Shock Absorber Protective Cap (AL.) 1P
050101-Outerwear Shock Absorber Covers 4P	050009-Universal Drive Joint 2P (steel) 2P	050010-Futaba Servo Mount(L/R) (AL.) 1P	050011-Servo Mount(L/R) (AL.) 1P
050005-Caster Mount(L/R) (AL.) 1P	050007-Rear Hub Carrier (AL.) 2P	050012W-F/R Upper Susp.Arm (AL.) 2P	054006-F/R Upper Suspension Arm (AL.) 2P
050023-Servo Horn (AL.) 1P	050015-Body Post (AL.) (for truck&buggy only) 1P	050018-Roll Cage (AL.) 1P	050024-Aluminum Polished Exhaust Pipe (For truck only) 1P
050039-Aluminum Polished Exhaust Pipe (for Buggy only) (AL.) 1P	050109-Alum.Centre Diff Mount Set(for Truck only) (Gear:25T/35T/25T/25T) 1P	051030-Alum.Centre Diff Mount Set(for Buggy only) (Gear:29T/31T/25T/25T) 1P	050030-Wheel Hex Mount with Nut (AL.) 4P
050060-Gear Box (AL.) 1P	050001N-Front Lower Suspension Arm (AL.) 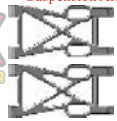 modified optional parts 2P	050002N-Rear Lower Suspension Arm (AL.) modified optional parts 2P	054016-Front Shock Tower (AL.) (For buggy only) modified optional parts 1P

Competition X
A WEB SITE FOR THE SERIOUS RACER

050022N-F/R ShockTower (AL.)	051011-Front Upper Suspesnion Arm	050012N-Front Upper Suspension Arm	050013N-Rear Upper Suspension Arm
modified optional parts 1P	modified optional parts 2P	modified optional parts 2P	modified optional parts 2P

MONSTER TRUCK FULL ASSEMBLY EXPLODED VIEW

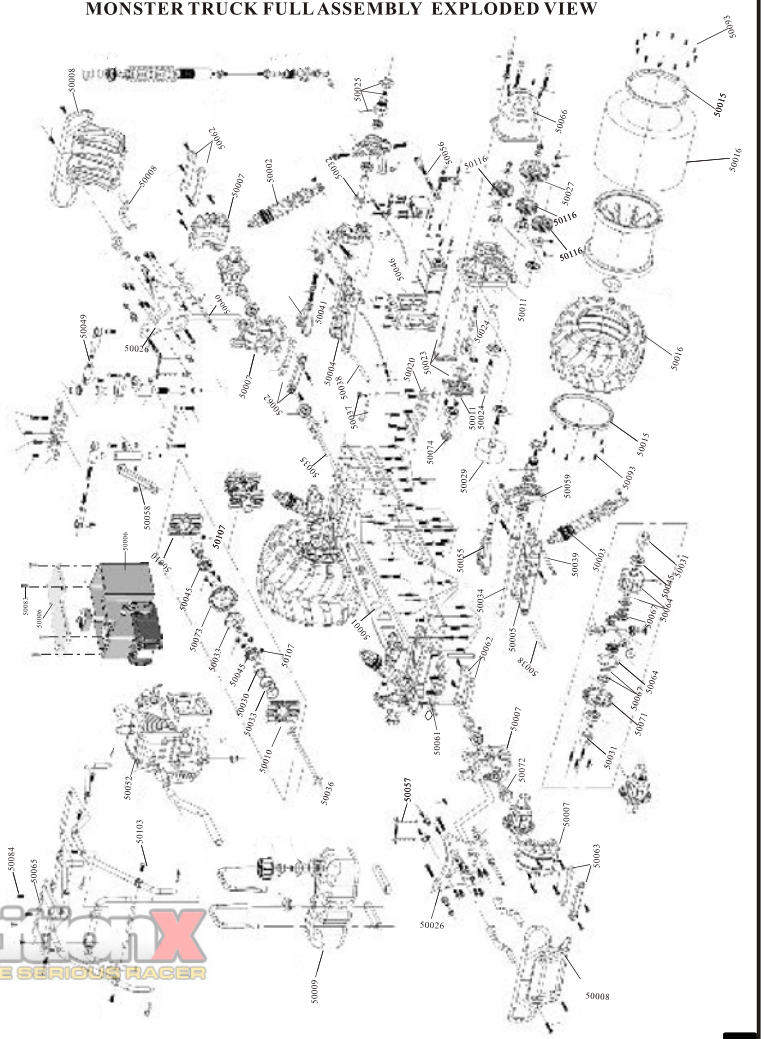

CompetitionX
A WEB SITE FOR THE SERIOUS RACER

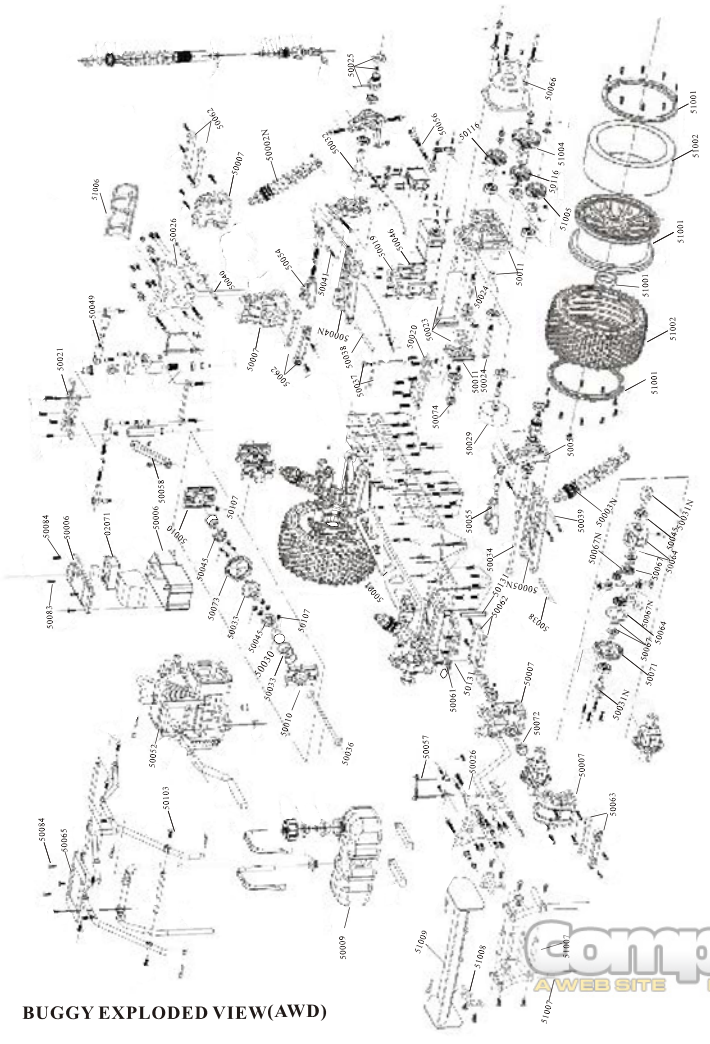

BUGGY EXPLODED VIEW(AWD)

CompetitionX
A WEB SITE FOR THE SERIOUS RACER