8IGHT 2.0

RTR

Operations Guide

CompetitionX
A WEB SITE FOR THE SERIOUS RACER

Losi®

Not responsible for errors. All prices subject to change without notice.
Losi, a Division of Horizon Hobby, Inc.

Losi, a Division of Horizon Hobby, Inc.
800-0394

Introduction

Thank you for choosing the Losi® 8IGHT-T 2.0™ RTR Truggy. This is a highly developed off-road model that features a sophisticated computer-based radio system and does require some mechanical experience and direct adult supervision. This guide contains the basic instructions for operating and maintaining your new Losi 8IGHT-T 2.0 RTR. Please take the time to read through it completely before running the model. In addition to the service information available in this operations guide, our online Support - Answer Center is available at www.Losi.com for performance tips and troubleshooting questions. Also included with your 8IGHT-T 2.0 RTR is a 8IGHT-T 2.0 Race Roller Owners Manual. This manual can be used to reference how the vehicle is assembled and also includes build and setup tips. **Your hobby dealer cannot under any circumstances, accept a model for return or exchange that has been run.**

Customer Support Contact:
Horizon Hobby, Inc.
4105 Fieldstone Road
Champaign, IL 61822
1-877-504-0233
productsupport@horizonhobby.com

STAY CONNECTED - REGISTER YOUR PRODUCT ONLINE

Register your product online so we can notify you about the latest option parts, product updates, tech tips, service bulletins and more. Visit www.losi.com and follow the Product Registration link to stay connected.

Safety Precautions

Age Recommendation: 14 years or over. This is not a toy. This product is not intended for use by children without direct adult supervision.

THIS IS NOT A TOY! The 8IGHT-T 2.0 RTR is a sophisticated, high-performance radio controlled model, which needs to be operated with caution and common sense. Failure to operate this model in a safe and responsible manner could result in personal and/or property damage. It is your responsibility to see that the instructions are followed and precautions adhered to.

The 8IGHT-T 2.0 RTR is not intended for use by children without direct adult supervision. Losi and Horizon Hobby shall not be liable for any loss or damages, whether direct, indirect, special, incidental or consequential arising from the use, misuse or abuse of this product or any product required to operate it.

*** This is still a model; don't expect it to do unrealistic stunts.**

Warnings

- Fuel is dangerous if handled carelessly. Follow all directions and precautions on the fuel container.
- Keep fuel and all chemicals out of the reach of children.
- Always keep the fuel container closed and never use around an open flame or while smoking.
- The exhaust emits poisonous carbon monoxide fumes. Always run the model in a well ventilated area and never attempt to run it indoors.
- The top of the engine and the exhaust pipe are extremely hot during and for a time after use. Use caution not to touch these parts, especially when refueling.
- The engine can be loud, especially when run in a confined area. If you find the noise objectionable, use ear protection.
- This model is controlled by a radio signal that is subject to interference from sources outside your control. Interference can cause temporary loss of control so it is advisable to always keep a safety margin in all directions to avoid collisions.
- Always operate your model in an open area away from people and cars. The potential speed of this model can cause injury or damage.

Required Equipment

You will need the following items to operate your new 8IGHT-T 2.0 RTR.

- Losi® Nitrotane™ 20% Sport Fuel. (LOSF0020 or LOSF0120) Nitrotane is the only fuel recommended by Losi for the included nitro engine.
- Fuel bottle (LOSB5201)
- (2) 7.2V batteries (LOSB9900) and charger for the Starter Box
- Rechargeable Glow Igniter (LOSB5221)
- Charger for receiver battery

CompetitionX A WEB SITE FOR THE SERIOUS RACER

Tools You Will Find Handy

In addition to the tools included with your vehicle, you will find the following both useful and in some cases necessary.

- Small flat blade screwdriver
- Phillips screwdrivers
- Needle-nose pliers
- Quality .050-inch, 1/16-inch, 5/64-inch, and 3/32-inch, hex (Allen) drivers (LOSA99104)

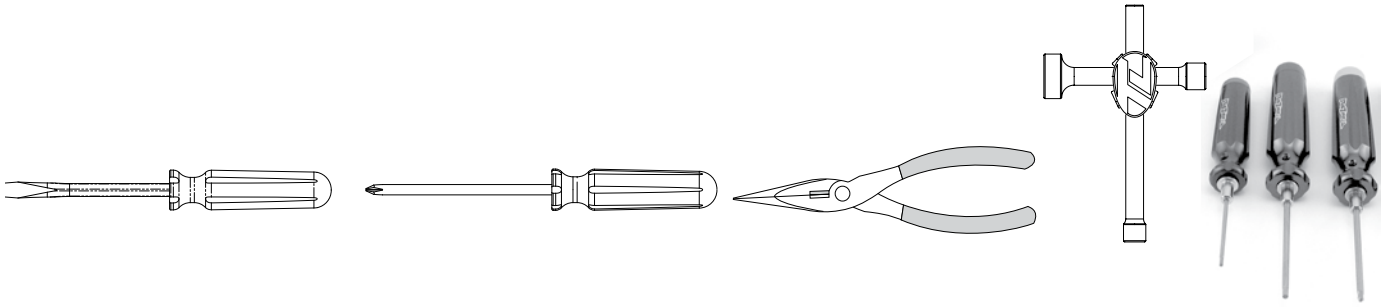

Engine Break-In and Adjustments

Breaking in your new engine is critical for proper performance. Failure to follow the break-in procedures can cause damage and shortened engine life. During break-in and when running, always use Losi Nitrotane 20% Sport Fuel. Although the carburetor is pre-adjusted at the factory, you must be familiar with the following adjustments and break-in procedure. If you change fuel or run in dramatically different environments (hot/cold, high/low elevation, etc.) you will probably have to adjust at least the high-speed needle to prevent overheating and maintain proper performance. Never, under any circumstances allow the engine to rev freely with the wheels off the ground.

Break-In Procedure

1. The first three tanks of fuel should be run with the high- and low-speed needles noticeably rich (see explanation below). There should be a slight sluggishness and thick smoke when accelerating, with the smoke decreasing as the model gains speed. At speed, there should still be a noticeable trail of smoke from the exhaust pipe. Run the model on a flat surface in an oval pattern. Ease into the throttle as you accelerate on the straight sections, easing off as you approach turns—letting the model roll through the turn before easing back on the throttle. This will also allow you to get a feel for the steering response and handling characteristics of the model.
2. You can also break in the engine by placing the model against a wall or fixed object (on top of the starter box) and allowing the engine to idle through two full tanks of fuel. You may have to lean the low-speed mixture (slightly) as noted below.

Understanding Rich and Lean Fuel Mixture

Adjusting the carburetor is one of the most critical facets of running a nitro powered RC vehicle. The fuel mixture is referred to as being rich when there is too much fuel and lean when there is not enough fuel for the amount of air entering the engine. The amount of fuel entering the engine is adjusted with high- and low-speed threaded needle valves. The low-speed needle is located in the front of the moving slide. The high-speed needle sticks straight up at the back of the carburetor. Both feature a slotted head that is used as a reference and receptacle for a flat blade screwdriver for adjustments. The mixture is made richer by turning the needle counterclockwise and leaner by turning clockwise. An overly rich mixture will yield sluggish acceleration and performance with thick smoke from the exhaust. A lean mixture can cause the engine to hesitate before accelerating or, in some cases, to lose power momentarily after the initial acceleration. A lean mixture also makes the engine run hotter than desired and does not provide enough lubrication for the internal engine components, causing premature wear and damage. It is always advisable to **run the engine slightly rich** and **never lean** to avoid overheating and possible damage.

Engine Tuning

CompetitionX
Competition Power Products

After the engine is broken in, you can tune it for optimum performance. When tuning, it is critical that you be cautious of overheating as severe damage and premature wear can occur. You want to make all carburetor adjustments in "one hour" increments.

Carburetor Adjustments:

Make all carburetor adjustments in one-hour increments. Imagine the slot in the needle is the hour hand on a clock. Adjust it as though you were moving the hour hand from one hour to the next or previous one.

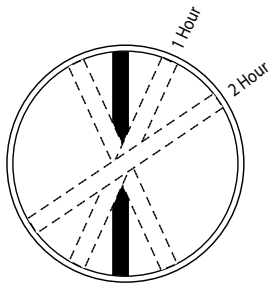

Carb Adjustments:
Make all carburetor adjustments in one-hour increments.
Imagine the slot in the needle is the hour hand on a clock. Adjust it as though you were moving the hour hand from one hour to the next or previous one.

Low-Speed Adjustment

The low-speed adjustment affects the idle and slightly-off-idle performance. The optimum setting allows the motor to idle for at least 8–10 seconds. The model should then accelerate with a slight amount of sluggishness and a noticeable amount of smoke. The simplest way to check this is to make sure the engine has been warmed up and let the engine idle for 8–10 seconds. If the low-speed mixture is so far off that the engine won't stay running that long, turn the idle-speed screw clockwise, increasing the idle speed. With the engine at idle, pinch and hold the fuel line near the carburetor, cutting off the flow of fuel, and listen closely to the engine rpm (speed). If the low-speed needle is set correctly, the engine speed will increase only slightly and then die. If the engine increases several hundred rpm before stopping, the low-speed needle is too rich. Lean the mixture by turning the needle clockwise one hour and trying again. If the engine speed does not increase but simply dies, the needle is too lean and needs to be richened up by turning the needle counterclockwise one hour before trying again. After you have optimized the low-speed setting, the engine will probably be idling faster. You will have to adjust the idle-speed screw counterclockwise to slow the engine idle speed down. The engine should accelerate at a constant pace without hesitating.

Low-Speed Needle
As you turn this clockwise (leaner), less fuel enters the engine. Turning it counterclockwise (richer) allows more fuel to enter the engine.

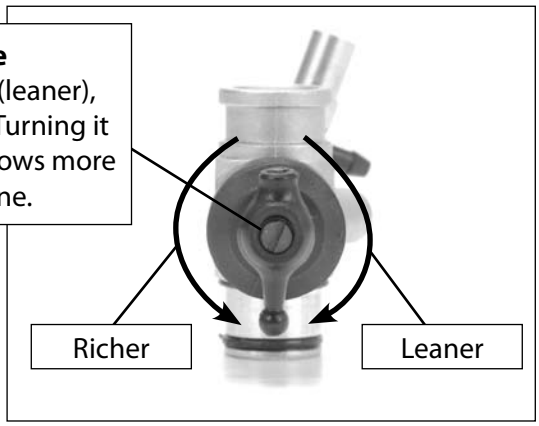

High-Speed Adjustment

After initial acceleration, the engine should pull at a steady rate while maintaining a two-stroke whine and a noticeable trail of smoke. If the engine labors and is sluggish with heavy smoke, the mixture is too rich and needs to be leaned by turning the high-speed needle clockwise in one-hour increments until it runs smoothly. If the engine isn't smoking or starts to die after acceleration, it is too lean and you must richen the mixture by turning the needle counterclockwise. Don't be confused by the sound of the engine and the actual performance. A leaner mixture will produce an exhaust note with a higher pitch but this does not necessarily mean improved performance, as the engine is on the verge of overheating and may incur possible damage. Ideally you want to run the engine so that it is on the slightly rich side of optimum. This will give you the best combination of speed and engine life. **CAUTION**: The engine is too lean and overheating if it accelerates rapidly with a high-pitched scream then seems to labor, stops smoking, or loses speed. This can be caused by the terrain, atmospheric conditions, or drastic altitude changes. To avoid permanent engine damage, **immediately** richen the mixture by turning the high-speed needle counterclockwise at least "two hours" and be prepared for further adjustments before running any more. **Note**: The normal operating, temperature as seen on your radio screen should be in the 190 to 230° F (88 to 110° C) range.

High-Speed Needle
As you turn this clockwise (leaner), less fuel enters the engine. Turning it counterclockwise (richer) allows more fuel to enter the engine.

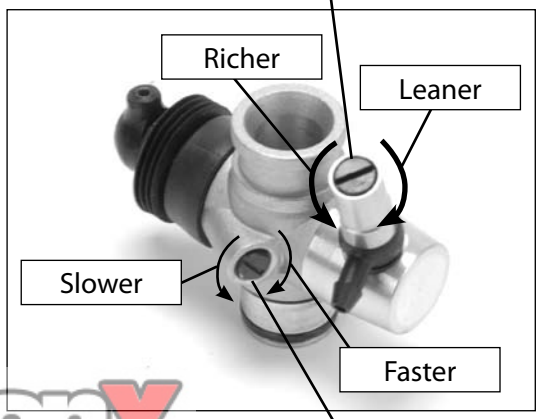

Idle-Speed Adjustment
As you turn this clockwise, it increases the carburetor opening at idle and increases idle speed. Turning it counterclockwise decreases the opening and decreases idle speed.

Competition X
MAGAZINE FOR THE SERIOUS RACER

Base Carburetor Start-Up Settings from the Factory

If you find that your engine will not run properly it is advised that you return the carburetor settings to their factory settings. This is done by slowly screwing the needles in clockwise until you feel resistance. You will know that the needle is bottomed out. Then follow the specs below for both the High- and Low-Speed Needle. This will get you to a point that you can start over again.

High-Speed Needle—$2^1/_2$ turns out from the bottom

Low-Speed Needle— $2^1/_2$ turns out from the bottom

About Glow Plugs

The glow plug is like the ignition system in your automobile. The coiled element in the center of the plug glows red hot when connected to a 1.5-volt battery (located in the igniter). This is what ignites the fuel/air mixture when compressed in the cylinder. After the engine fires, the heat generated by the burning fuel keeps the element hot. Common reasons for the engine not starting are the 1.5-volt battery being weak, the glow plug being wet with fuel, or the element burned out. Use a spare glow plug to check the igniter. If the igniter makes the element glow, remove the plug from the engine to check it in the same manner. A wet glow plug means there is excess fuel in the engine. To eliminate this, with the glow plug removed and the model on the starter box put a rag over the head and turn the engine over a few seconds. This will remove the excess fuel in the engine. Reinstall the glow plug, making sure you have the brass gasket on it. The engine should start now. We recommend the Dynamite® DYN2495 Glow Plug as this is the best glow plug for this engine. The DYN2495 Glow Plug has been designed to deliver an ideal balance of performance and longevity.

DYN2495 Shown

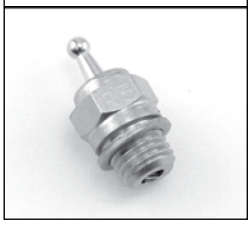

Testing the Temperature

Although the DX3S radio offers temperature readout, the following is a handy backup method. The ideal operating temperature for the engine will vary with the air temperature but in general it should be in the 190 to 230° F (88 to 110° C) range. A simple way to check the engine temperature is to put a few drops of water on the top of the head/heat sink. It should take 3–5 seconds for the water to evaporate. If it boils away quickly the engine is overheating and the high-speed needle needs to be richened (turned counterclockwise) at least "two hours." With the DX3S radio you will notice the engine runs cooler when the vehicle is being driven. This is obviously true as air is passing through the fins on the head cooling the engine. In order to obtain an accurate temperature reading from the engine, stop the car in a safe area, and let the engine idle for 10 seconds. You will notice that your engine temperature on the radio will increase and then stabilize. Once the temperature stabilizes, this is your true engine temperature.

CompetitionX
A WEB SITE FOR THE SERIOUS RACER

About the Radio

The Spektrum DX3S radio installed in the 8IGHT-T 2.0 RTR is a professional level system with more than the usual features you may find useful. Be sure to read through the included radio manual for complete instructions. The following is a simple guide referring to items that are commonly used and/or needed to run your model.

1. **Power Switch - Turns your transmitter ON and OFF**
2. **Steering Wheel - Controls the steering of your model**
3. **Steering Trim Tab - Allows you to fine-tune the neutral position of the steering**
4. **Throttle Trigger - Pull back for throttle and push forward for brakes**
5. **Throttle Trim Tab - Allows you to set the idle/brake of the model**
6. **Transmitter Display - Digital readout shows battery voltage, temperature, rpm/speed and functions/settings**
7. **Transmitter Antenna - Transmits signal to the receiver in the model**
8. **AUX-Auxiliary which is not used on the 8IGHT-T 2.0 RTR**

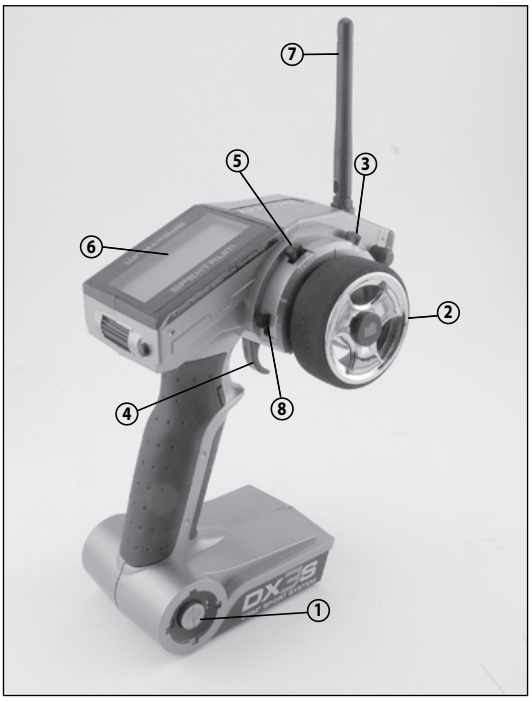

Radio Operation

It is important that you familiarize yourself with the radio system, as this is your direct link to the model.

- Never run your model with low receiver or transmitter batteries.
- Always fold the antenna to the upright position before running your model.
- Never leave the power on or the batteries will not last long.
- Always turn the transmitter ON before turning the model ON.
- When finished running, always turn the model OFF before the transmitter.
- For best operation, it will be necessary to keep the "trims" adjusted for both the steering and throttle as noted on the following pages.

Steering Trim: The model should go straight without turning the steering wheel. If not, tap the trim lever found just above and to the right of the steering wheel in the direction needed for the model to go straight. Each tap of the trim button will be accompanied by an audible tone indicating a change has been made. It may take several taps to get the correct trim setting.

Throttle Trim: The model should idle without the tires rotating when the trigger is at its neutral position. If not, tap the trim lever found just above and to the left of the steering wheel to reposition the throttle servo and close the carburetor and apply more brake. Note that additional braking force is applied when you push the trigger forward.

Telemetry Sensors

- The battery power of the receiver pack will automatically register on the readout screen on the radio.
- The engine temperature sensor is installed around the head just above the head bolts as seen in the photo. The temperature sensor needs to be always mounted in this location for accurate temperature readings.
- The RPM/Speed Sensor (SPM1452) is mounted directly in the side of the radio tray near the center differential.

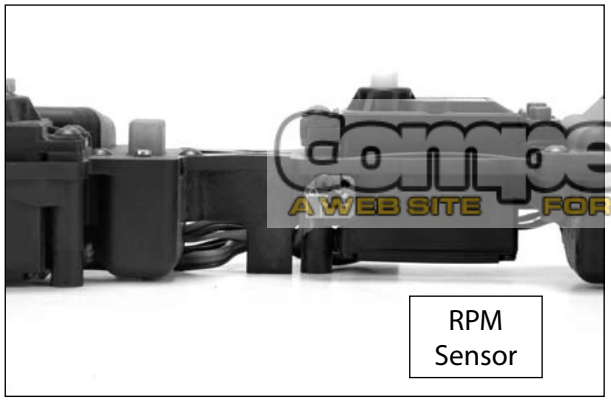

CompetitionX
A WEB SITE FOR THE SERIOUS RACER

Maintenance

In addition to the service needs pointed out in this guide, you should try to maintain your new 8IGHT-T 2.0 RTR for proper performance and to prevent wear. If dirt gets in the moving parts it can seriously hinder the performance of the model. Use compressed air, a soft paintbrush and/or toothbrush to remove dirt and dust. Avoid using solvents, if possible, as this can actually wash the dirt into bearings and areas not accessible without disassembly, causing additional wear. We suggest you follow these basic guidelines.

- Remove as much freestanding dirt and dust as noted above.
- Never leave fuel in the tank for more than a couple of hours.
- When done running for the day or longer, let the engine run out of fuel. Remove the air cleaner and pour a small amount of WD40 or quality after-run engine oil into the carburetor and spin the engine over a few seconds.
- If needed, replace the air cleaner before installing it back on the model.
- Inspect the chassis for worn, broken, or binding parts and repair as necessary.

Servicing the Clutch

The 8IGHT-T 2.0 RTR comes with a 4-shoe aluminum clutch that needs to be maintained periodically for optimum performance. You will notice that when the vehicle is new the acceleration will be very linear: the sound of the engine increasing in rpm will equal as the vehicle increases in speed. Once you find that your acceleration is decreased but the engine rpm is higher than before, it is probably time for a new clutch. On the right is a picture of a new clutch. This is how the clutch shoes look prior to running the vehicle.

Clutch Shoe Removal
In order to remove your clutch shoes from the flywheel, remove these four screws with a 1/16-inch hex wrench.

Below is a used clutch. You will notice the edges of the shoes are "mushroomed" over. Generally the more that the shoes are "mushroomed" over the more the shoes are worn.

Whenever you need to rebuild your clutch we recommend the following tips. First of all, be sure to clean all parts with Losi Nitrotec™ Spray Cleaner (LOSA99217) to ensure there is no oil or debris on any of the parts. Cleaning will include all the clutch parts including the clutch bearings. We like to spray out the clutch bearings to ensure that there is no grease slung from the bearings at high rpm which would cause premature clutch wear or slippage. When reinstalling the clutch pins we recommend NOT using any type of Losi-Lok or threadlocking compound on the clutch pins. By using Losi-Lok on this part, it only makes it difficult to remove the pins. Once the new shoes are installed, pull back each clutch shoe 1mm to make sure they spring back into position to ensure proper movement. You will also want to make sure the clutch bell has anywhere from .25mm to .50mm of free play from side-to-side and spins freely on the crankshaft. You can use Losi's Metric Shim Set (LOSA6356) to dial this in properly. Now that your clutch is rebuilt it is time to break it in. This is done by starting your buggy and having it idling on the ground. While firmly holding the vehicle down on the ground, apply 1/2 throttle for three seconds. Repeat this three times to fully seat in your new clutch.

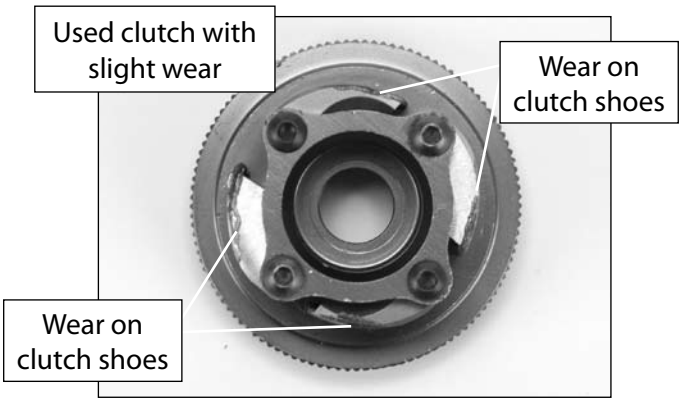

CompetitionX
A WEB SITE FOR THE SERIOUS RACER

Servicing the Differentials

The 8IGHT-T 2.0 RTR is equipped with heavy-duty differential cases that are filled with silicone oil inside of all three differentials. To understand how each differential needs to be removed please refer to the illustrated 8IGHT-T 2.0 Race Roller Manual that is included with the model. It is recommended after 4 to 6 hours of use to check the differential fluid levels of each differential. Simply open each differential to check the fluid level and top off if needed. The 8IGHT-T 2.0 RTR comes with Losi Silicone Diff Fluid 7000 wt (LOSA5281) in the front differential, 10000 wt (LOSA5282) in the center differential, and 3000 wt (LOSA5279) in the rear differential.

Rebuilding/Refilling the Shocks

The 8IGHT-T 2.0 RTR comes with oil filled shocks. The oil in the shocks is 35 wt and should be replaced with Losi 35 wt oil (LOSA5225). Instructions on shock assembly are located on page 19 in the 8IGHT-T 2.0 Race Roller Manual that is included with the vehicle.

Fuel Tank

The 8IGHT-T 2.0 RTR comes preinstalled with a fuel tank insert to meet ROAR and RC Pro Series 150cc fuel tank rules. If you are not racing your 8IGHT-T 2.0 RTR where these rules apply, you can remove the insert to allow for an additional 5cc of fuel for longer run times.

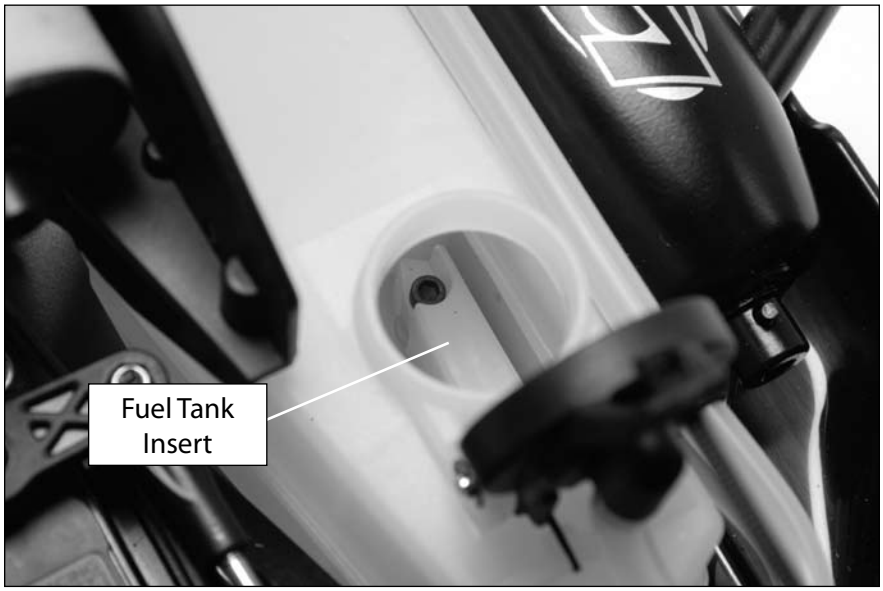

CompetitionX
A WEB SITE FOR THE SERIOUS RACER

Quick Reference Guide

Engine

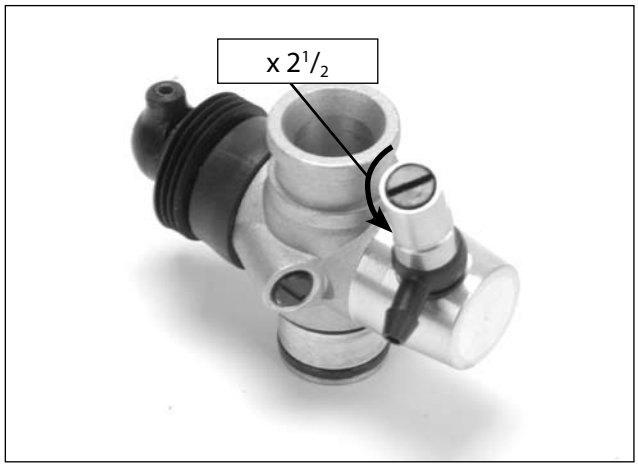

High-Speed Needle - $2^1/_2$ turns out from bottom

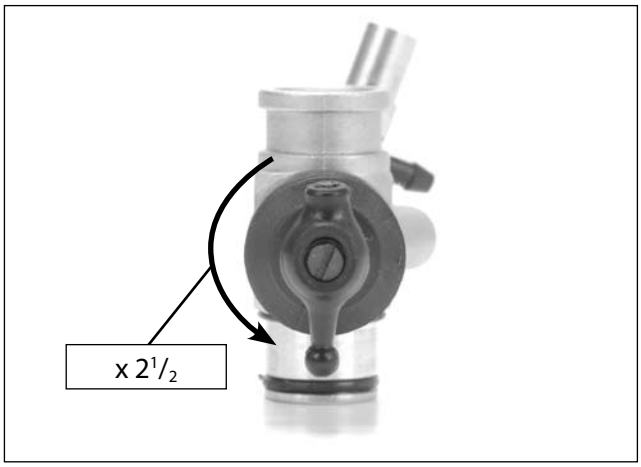

Low-Speed Needle - $2^1/_2$ turns out from bottom

Linkage Measurements

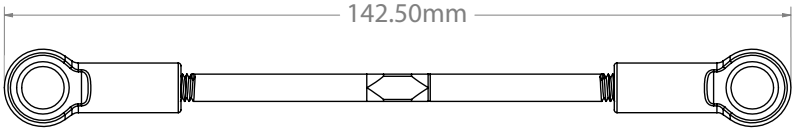

Front Camber Linkage

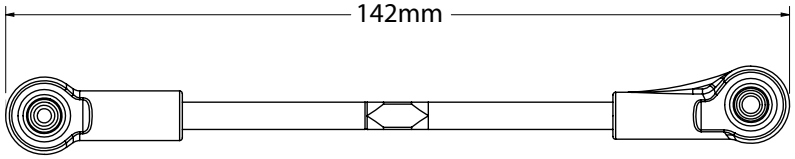

Rear Camber Linkage

Steering Linkage

Shock

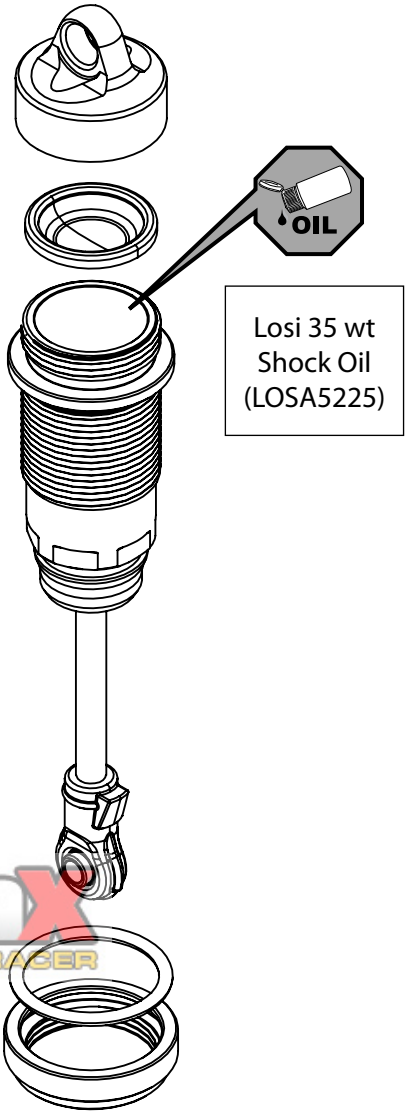

CompetitionX
A WEB SITE FOR THE SERIOUS RACER

Customer Support
Horizon Hobby, Inc.
4105 Fieldstone Road
Champaign, IL 61822
1-877-504-0233

Troubleshooting Chart

Customer Support
Horizon Hobby, Inc.
4105 Fieldstone Road
Champaign, IL 61822
1-877-504-0233

Problem	Things to Check	Remedy
Engine won't start.....	Out of fuel Spoiled or improper fuel Glow plug not lighting Glow igniter battery low Engine overheated Engine flooded Air cleaner blocked Exhaust blocked	 Check/replace glow plug Charge/change battery Let cool - see "Testing the Temperature" Clean and reoil aircleaner
Engine won't turn over.....	Engine is flooded Engine seized	Loosen glow plug and try again Damaged, if will not turn over
Engine starts, then stalls.....	Idle speed set too low Glow plug is fouled/weak Air bubbles in fuel line Engine is overheated Insufficient fuel tank pressure/blockage	See "Carburetor Adjustments" See "About Glow Plugs" Check for split/hole in fuel line See "Testing the Temperature" Clear pressure line
Engine performing poorly.....	High-speed fuel mixture is too rich Engine overheating Leaking glow plug Carburetor dirty or blocked Fuel bad or contaminated Clutch or slipper slipping Bound up drivetrain Engine worn out	See "Engine Tuning" See "Engine Tuning" richen 2 hours Replace glow plug Try fresh fuel Clean/Adjust/Repair Check for binds in drivetrain Rebuild
Engine overheats.....	High-speed fuel mixture is too lean Low-speed fuel mixture too lean Spoiled or improper fuel Cooling air is being blocked Excessive load on the engine	See "Understanding Rich and Lean" Clean head fins Check for binds/dirt build up
Engine hesitates or stumbles.....	Engine overheated High-speed mixture too lean Low-speed mixture too rich Air bubbles in fuel line Glow plug fouled	See "Engine Tuning," richen 2 hours See "Engine Tuning," richen 2 hours See "Engine Tuning," richen 1 hour Check fuel line for holes Change glow plug
Engine stalls instantly when throttle is fully opened from idle.....	Glow plug fouled High-speed mixture too rich Low-speed mixture too lean	Change glow plug See "Engine Tuning" See "Engine Tuning," richen 1 hour
Engine stalls while driving around turns.....	Fuel level is low Idle speed set too low	Add fuel Increase idle speed
Engine stalls while idling.....	Low-speed mixture too rich Low-speed mixture too lean Idle speed too low Clutch shoes dragging Clutch bearings failed Engine worn out	See "Engine Tuning" See "Engine Tuning" Increase idle speed Check for broken clultch springs Check/Clean/Replace Rebuild

CompetitionX
A WEB SITE FOR THE SERIOUS RACER

Losi 454
Rear Exhaust Engine

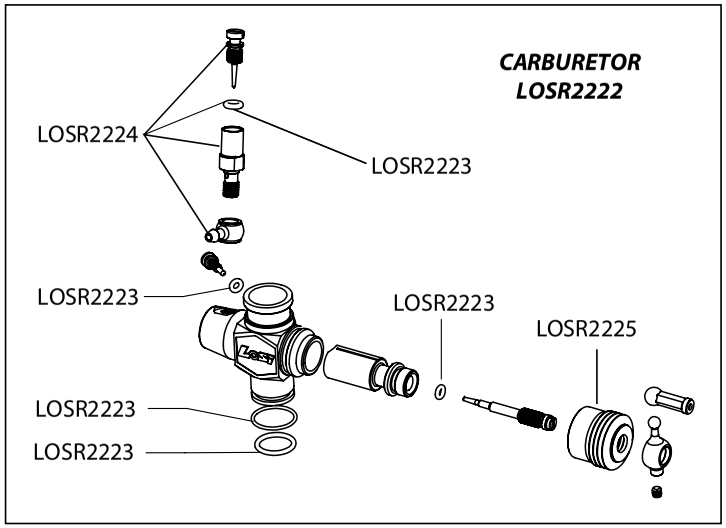

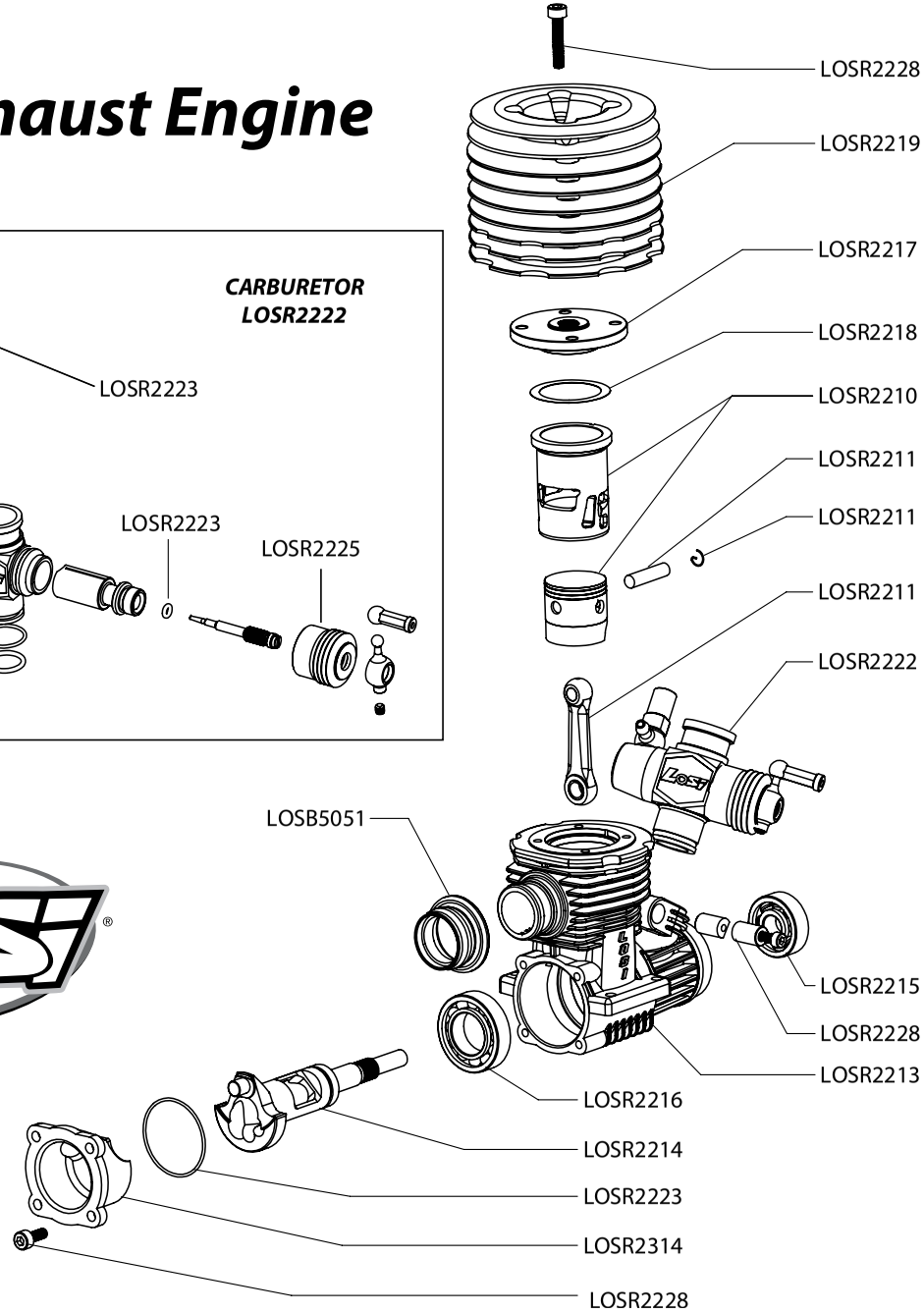

Engine Components

LOSR2201	Losi 454 Engine, Non Pull Start	$239.99
LOSR2210	Piston/Sleeve, 8 Port: 454	$69.99
LOSR2211	Connecting Rod w/Wrist Pin & Clips: 454	$46.99
LOSR2213	Crankcase, Alum: 454	$69.99
LOSR2214	Crankshaft, Standard w/o PS: 454	$69.99
LOSR2215	Front Bearing: .26, 427, 454	$9.49
LOSR2216	Rear Bearing: .26, 427, 454	$24.99
LOSR2217	Combustion Chamber: 454	$10.99
LOSR2218	Head Gasket (2): 454	$3.99
LOSR2219	Cooling Head, Orange: 454	$49.99
LOSR2222	Carburetor, 9.5mm: .26, 427, 454	$49.99
LOSR2223	Carb & Backplate O-Rings: .26, 427, 454	$7.99
LOSR2224	Hi-Speed Needle Assembly: .26, 427, 454	$15.99
LOSR2225	Carb Dust Boot: .26, 427, 454	$7.99
LOSR2228	Screw & Carb Pinchbolt Set (13): 454	$9.99
LOSR2314	Standard Backplate, .26, 350, 427, 454	$12.99
LOSB5051	Exhaust Header Seals & Springs, .26,350,427, 454	$6.99

Competitive Edge
A WEB SITE FOR THE SERIOUS RACER

©2009 Horizon Hobby Inc.

Losi engines are manufactured in Taiwan and distributed worldwide by:
Horizon Hobby, Inc.
4105 Fieldstone Rd.
Champaign, IL 61822
Customer support
1-877-504-0233
www.horizonhobby.com
www.losi.com

FCC Information

This device complies with part 15 of the FCC rules. Operation is subject to the following two conditions:

(1) This device may not cause harmful interference, and

(2) This device must accept any interference received, including interference that may cause undesired operation.

Caution: Changes or modifications not expressly approved by the party responsible for compliance could void the user's authority to operate the equipment.

This product contains a radio transmitter with wireless technology which has been tested and found to be compliant with the applicable regulations governing a radio transmitter in the 2.400GHz to 2.4835GHz frequency range.

CE Compliance Information for the European Union

Instructions for Disposal of WEEE by Users in the European Union

This product must not be disposed of with other waste. Instead, it is the user's responsibility to dispose of their waste equipment by handing it over to a designated collection point for the recycling of waste electrical and electronic equipment. The separate collection and recycling of your waste equipment at the time of disposal will help to conserve natural resources and ensure that it is recycled in a manner that protects human health and the environment. For more information about where you can drop off your waste equipment for recycling, please contact your local city office, your household waste disposal service or where you purchased the product.

The associated regulatory agencies of the following countries recognize the noted certifications for this product as authorized for sale and use:

UK	DE	DK	NO	SE
FI	EE	LV	LT	PL
CZ	SK	HU	RO	SI
AT	IT	ES	PT	IE
NL	LU	MT	CY	GR

Age Recommendation

Age Recommendation: 14 years or over. This is not a toy. This product is not intended for use by children without direct adult supervision.

Declaration of Conformity

(in accordance with ISO/IEC 17050-1)

No. HH2009031802

Product(s):	Losi 8IGHT-T 2.0 RTR
Item Number(s):	LOSB0085
Equipment class:	2

The object of declaration described above is in conformity with the requirements of the specifications listed below, following the provisions of the European R&TTE directive 1999/5/EC:

EN 300-328 V1.7.1	Technical requirements for Radio equipment.
EN 301 489-1 v.1.6.1	General EMC requirements
EN 301 489-17 v.1.2.1	

Signed for and on behalf of:
Horizon Hobby, Inc.
Champaign, IL USA
Mar. 18, 2009

Steven A. Hall

Vice President
International Operations and Risk Management
Horizon Hobby, Inc.

CompetitionX
A WEB SITE FOR THE SERIOUS RACER

© 2009 Horizon Hobby, Inc.
Printed 03/09

The Spektrum trademark is used with permission of Bachmann Industries, Inc.