JRS

1/10th Scale Expert Racing Sedan

Owner's Manual

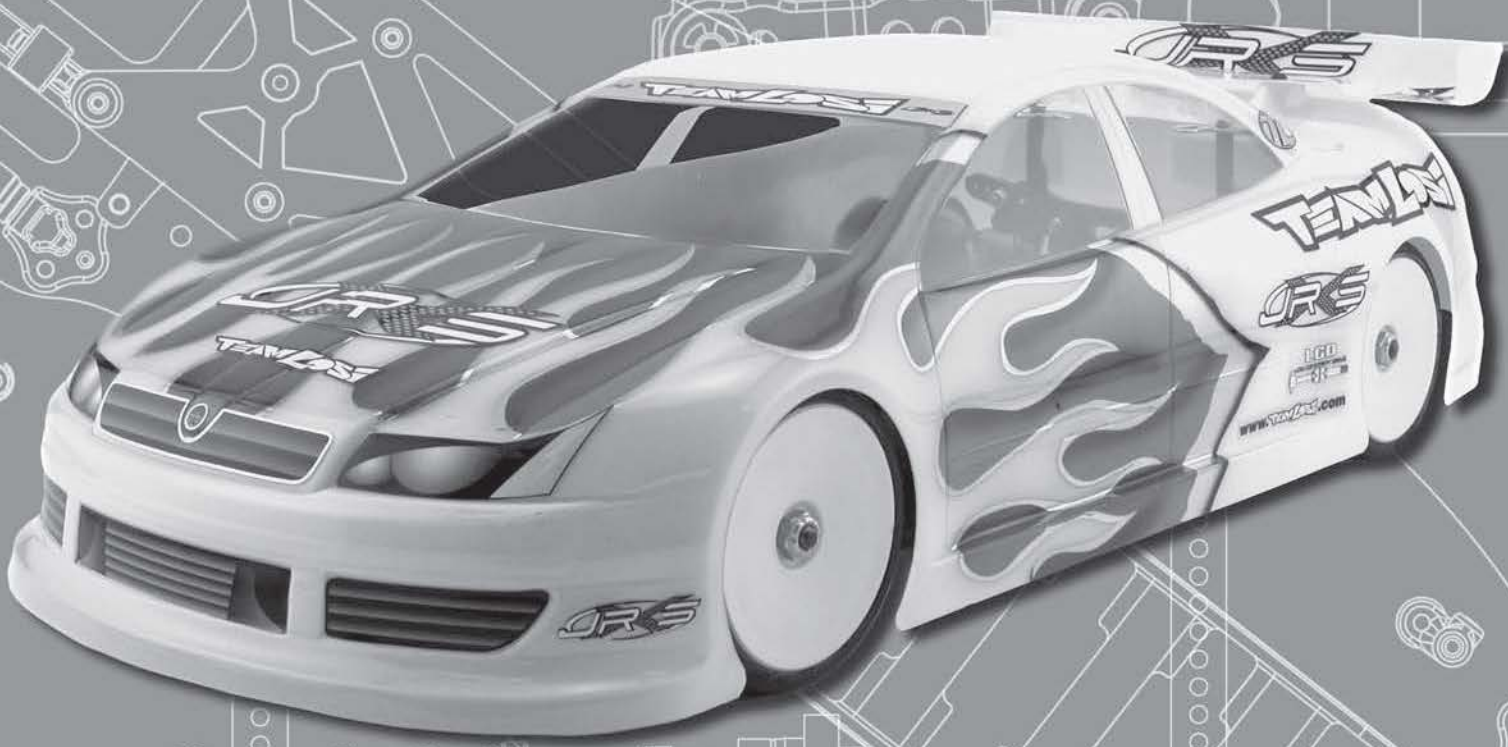

TEAM LOSI

ALWAYS RACING TOWARDS THE FUTURE.

A WEB SITE FOR THE SERIOUS RACER

Team Losi, A Division of Horizon Hobby Inc.
4710 E. Guasti Road, Ontario, CA 91761
Phone:(909) 390-9595 / Fax:(909) 390-5356
www.TeamLosi.com / email: feedback@TeamLosi.com

Welcome Team Losi *JRX-S* Owner!

Thank you for selecting the *JRX-S* as your new racing sedan. The *JRX-S* has already distinguished itself as a top caliber racing chassis and as you will see, we have made every effort to produce a kit that is not only the most competitive but also easy to build and maintain. The simple bag-by-bag assembly sequence and easily followed instructions and drawings combined with Team Losi's world famous quality fitting parts will make building the *JRX-S* a most enjoyable project.

Before you open the first bag, or start assembly, please take a moment to read through the following instructions. This will familiarize you with the various parts, assembly tips, and descriptions as well as the tools needed. Taking an extra moment before starting can save a good deal of time and assure proper assembly.

Good luck and good racing,

Team Losi

JRX-S COMPLETED KIT SPECIFICATIONS

Overall Length w/o Body: 14-7/8" (378mm)	Wheelbase: 10-3/16" (259mm)	*Front Track Width: 7-5/16" (186mm)
Overall Length w/Body: 16-7/8" (429mm)	*Height: 4-1/2" (114mm)	*Rear Track Width: 7-3/8" (188mm)

Note: Final kit weight will vary depending on accessories used.

**All measurements taken at ride height (5mm).*

Table 1: JRX-S Completed Kit Specifications.

Kit/Manual Organization:

The kit is composed of different bags marked A through F. Each bag contains all of the parts necessary to complete a particular section of the kit. Some of these bags have subassembly bags within them. It is essential that you open only one bag at a time and follow the correct assembly sequence, otherwise you may face difficulties in finding the correct part. It is helpful to read through the instructions for an entire bag prior to beginning assembly. Next to each of the step numbers is a check box. At the completion of each step, place a check in this box so that if you must stop and come back to the assembly, you will be able to pick up where you left off.

For your convenience, an actual-size Hardware Identification Guide is included as a fold-out page at the back of this manual. The hardware in each step is called out with an icon which contains a small picture of the part genre (referenced on the Hardware Identification Guide), the quantity of that part required for what is shown in the step, and the size or name of that part. To check a part, hold it against the silhouette until the correct part is identified. Associated with each of these parts, in the Hardware Identification Guide, is a LOSA-Number which is used when ordering replacement parts for your *JRX-S*. In some cases, extra hardware has been supplied for parts that may be easy to lose.

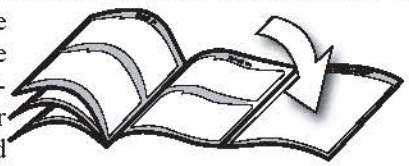

Components used in each step are identified by their relative LOSA-Number and the component's name. With the exception of a few parts, these are not referenced in the Hardware Identification-Guide.

The molded parts in Team Losi kits are manufactured to demanding tolerances. When screws are tightened to the point of being snug, the parts are held firmly in place. For this reason, it is very important that screws not be overtightened in any of the plastic parts.

In some steps there will be a filled black circle with a white number. These indicate the specific order by which assembly must occur. In cases where steps are repeated (front/rear or left/right) these numbers may be omitted. Please note that these numbers will not call out every sub-step required for the step's assembly procedures, they will only highlight the critical order required for assembly.

In each step, there are specific "Detail Icons" (shaped like a stop sign) that call out critical precautions or assembly tips for the process. There is a reference key that describes the meaning of each of the icons located on the fold-out Hardware Identification Guide at the back of this manual.

To ensure that parts are not lost during construction, it is recommended that you work over a towel or mat to prevent parts from rolling away.

IMPORTANT SAFETY NOTES:

1. Select an area for assembly that is away from the reach of small children. *Some parts in this kit are small and can be swallowed by children, causing choking and possible internal injury; PLEASE USE CAUTION!*
2. The shock fluid and greases supplied should be kept out of children's reach. *They are not intended for human consumption!*
3. Exercise care when using any hand tools, sharp instruments, or power tools during construction.
4. Carefully read all manufacturer's warnings and cautions *for any chemicals, glues, or paints that may be used for assembly and operating purposes.*

Competitionx A WEB SITE FOR THE SERIOUS RACER

TOOLS REQUIRED FOR ASSEMBLY

Team Losi has supplied all necessary Allen wrenches and a special wrench that is needed for assembly and adjustments. The following common tools will also be required: Needle-nose pliers, regular pliers, hobby knife, scissors or other body cutting/trimming tools, and a soldering iron may be necessary for radio installation. 3/16", 1/4", 5/16", and 11/32" nut drivers are optional.

RADIO/ELECTRONICS

A suggested radio layout is provided in this manual. Your high performance R/C center should be consulted regarding specific questions pertaining to radio/electrical equipment.

HARDWARE IDENTIFICATION

When in question, use the Hardware Identification Guide at the back of this manual.

- For screws, the prefix number designates the thread size and number of threads per inch (i.e., 4-40 is a #4 size thread with 40 threads per inch). The second number, or fraction, designates the length of the screw. For cap head and button head screws, this number refers to the length of the threaded portion of the screw. For flat head and set screws, this number refers to the overall length of the screw.
- Bearings and bushings are referenced by the inside diameter (I.D.) x outside diameter (O.D.). Shafts and pins are referred to by diameter x length.
- Washers are described by inside diameter or the screw size that will pass through the inside diameter x the thickness of the washer.
- E/C-clips are sized by the shaft diameter that they attach to. The Hardware Icon associated with E/C-Clips only designates the part genre of clips, not the actual part.
- Nuts come in four types, Non-Flanged, Flanged (F), Plain, and Locking (L) (designated on the Hardware Icons). The prefix number designates the thread size and number of threads per inch. The second number, or fraction, designates the size of the hex. For example, L 4-40 x 1/4" designates a Lock nut that will thread onto a 4-40 screw using a 1/4" nut driver.
- Ball studs are described by the length of the neck between the base and the bottom of the ball (i.e., standard, short) and the length of the threaded portion. A female ball stud is also used, this has internal threads similar to a nut.

TABLE OF CONTENTS

SECTIONS

1. **INTRODUCTION** ..... *i*
   - Kit/Manual Organization ..... *i*
   - Important Safety Notes ..... *i*
   - Tools Required for Assembly ..... *ii*
   - Radio/Electronics ..... *ii*
   - Hardware Identification ..... *ii*
2. **Bag A:** Main Chassis 1-3
3. **Bag B:** Drivetrain 4-6
4. **Bag C:** Front Suspension 7-9
5. **Bag D:** Rear Suspension 10-12
6. **Bag E:** Shocks 13-14
7. **Bag F:** Final Chassis/Electronics 15-19
8. **Checklist Before Your First Run** 20
9. **Setup Guide** 21-23
10. **Blank *JRX-S* Setup Sheet** 24
11. **Hardware Identification Guide** 25
12. **Filled-out *JRX-S* Kit Setup Sheet** 26

TABLES

Table 1: JRX-S Completed Kit Specifications ..... *i*
Table 2: Servo Installation 1
Table 3: Motor Gearing and Rollout 21

CompetitionX
A WEB SITE FOR THE SERIOUS RACER

Team Losi is continually changing and improving designs; therefore, the actual part may appear slightly different than the illustrated part. Illustrations of parts and assemblies may be slightly distorted to enhance pertinent details.

❑ STEP A-01 Bulkhead Installation

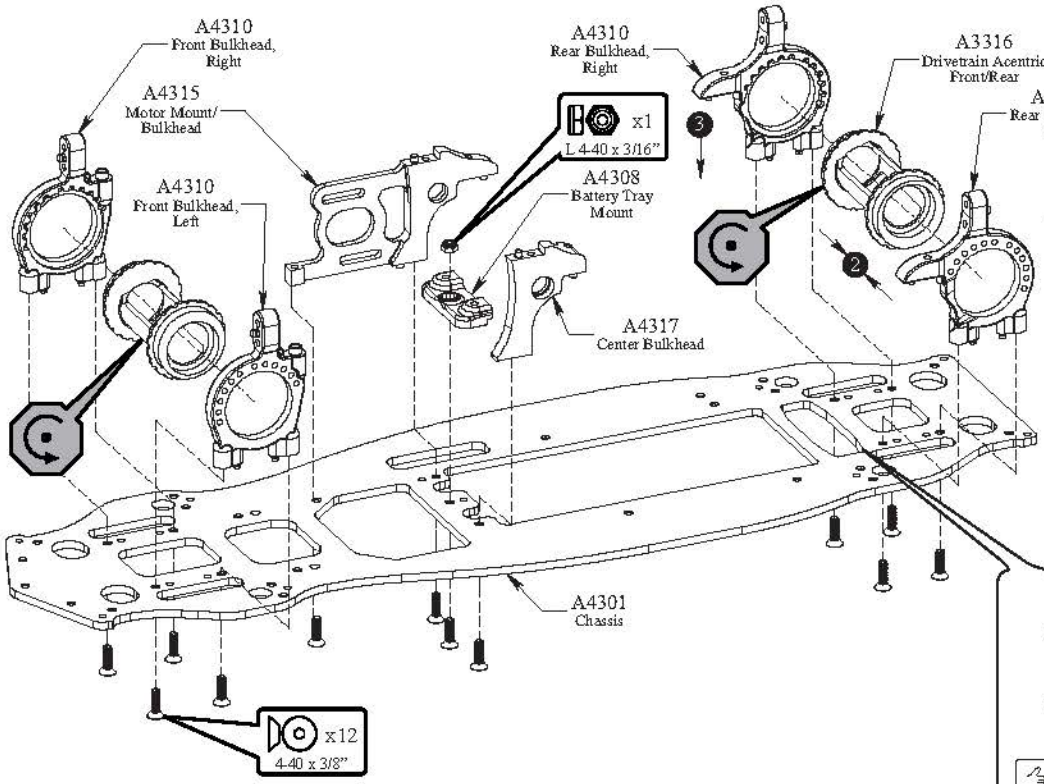

- File down the corners (shown in grey) of the rear battery slot (**on the side of the chassis without countersinks**) to allow the rear most battery cell to sit flush with the bottom of the Chassis. **BE CAREFUL NOT TO ALLOW THE BATTERY TO HANG BELOW THE CHASSIS.**

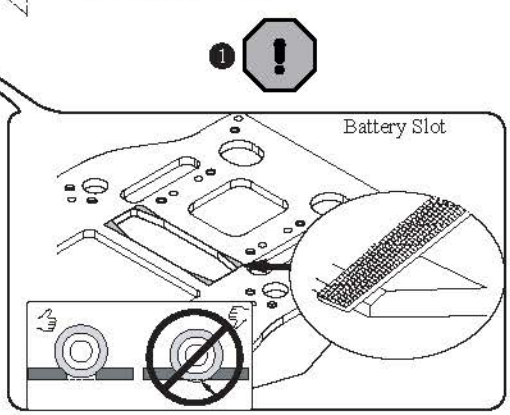

❑ STEP A-02 Servo Assembly

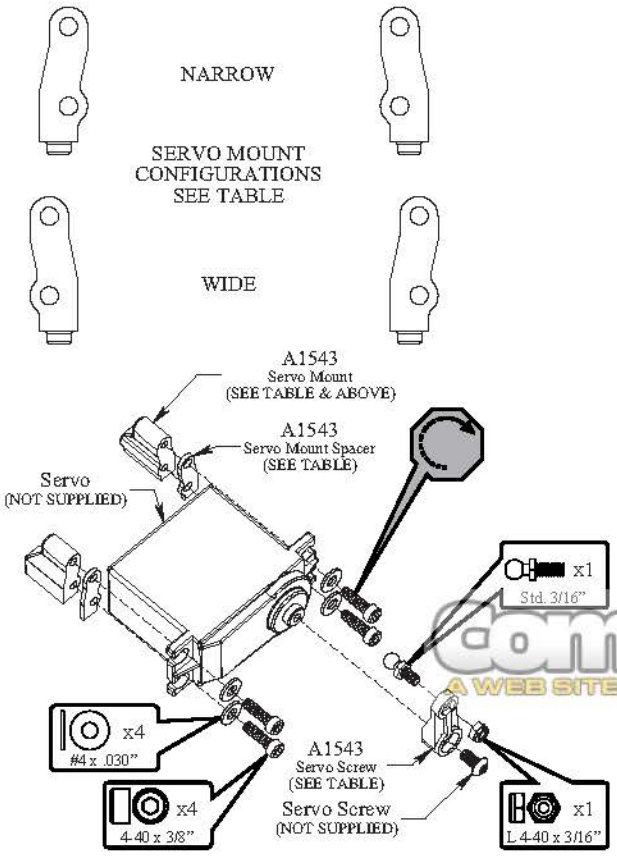

Servo Manufacturer, Make/Model	Servo Horn	Mount Position	Spacer Use
JR ALL	23T	Wide	Optional
KO ALL	25T	Wide	Optional
Hitec ALL	24T	Wide	Optional
Futaba ALL	25T	Wide	Optional
Airtronics ALL	23T	Wide	Optional

Table 2: Servo Installation Table for the JRX-S Expert Racing Sedan.

competitionX
A WEB SITE FOR THE RACING ENTHUSIAST

- Ensure the servo gear is **centered** before attaching the Servo Horn. This is best accomplished by connecting the servo to the radio system and setting the trim to center.
- DO NOT tighten the four 4-40 x 3/8" Cap Head Screws all the way, they must be tightened after assembly to the Chassis is complete to ensure proper alignment.

❑ STEP A-03 *Servo Installation*

- Once the Servo Mounts are secured to the Chassis, ensure the servo is centered in-between the Mounts and tighten the four 4-40 x 3/8" Cap Head Screws.

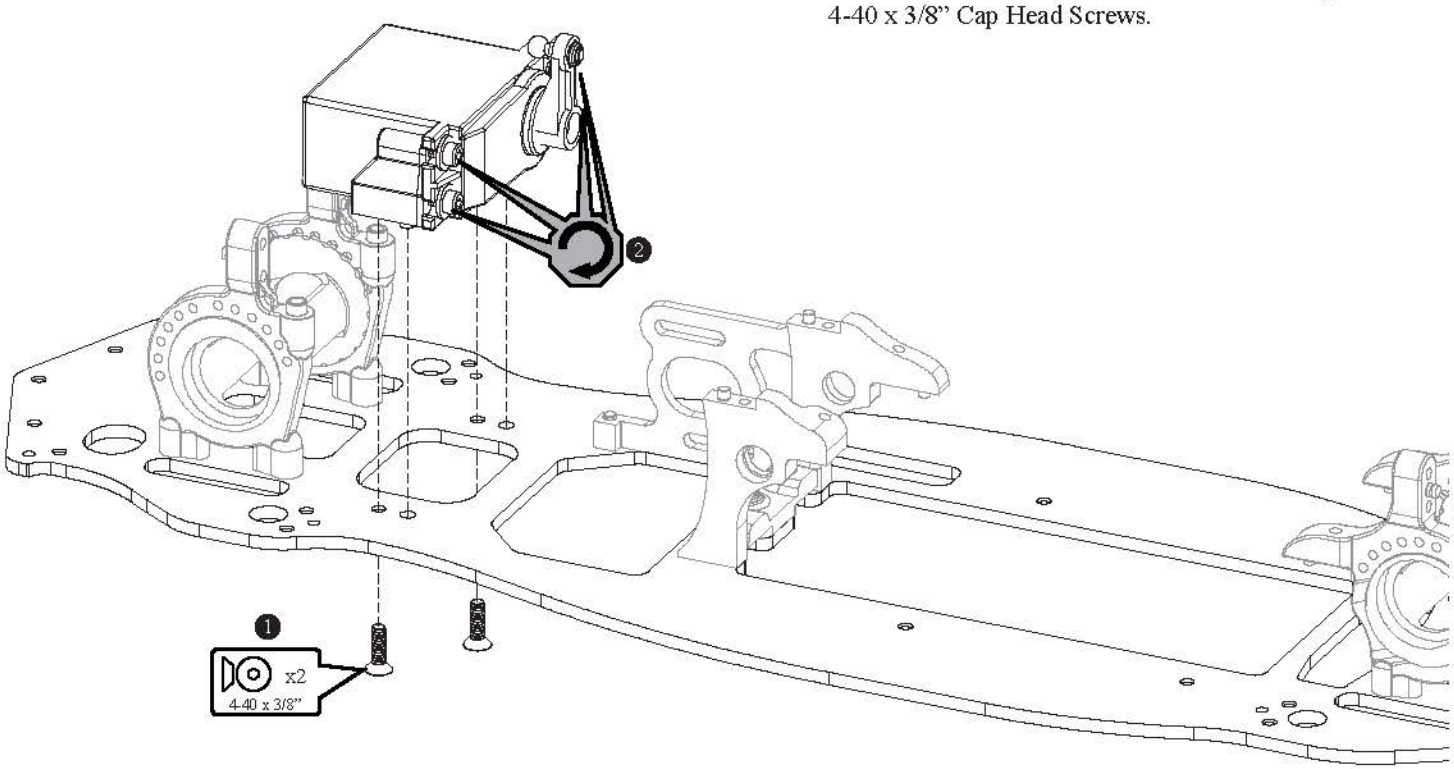

❑ STEP A-04 *Steering Assembly*

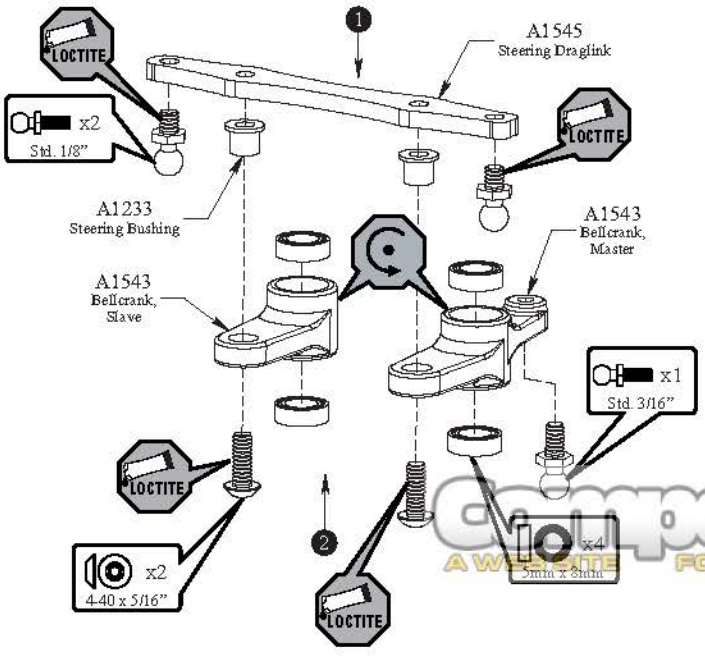

❑ STEP A-05 *Front Top Plate Assembly*

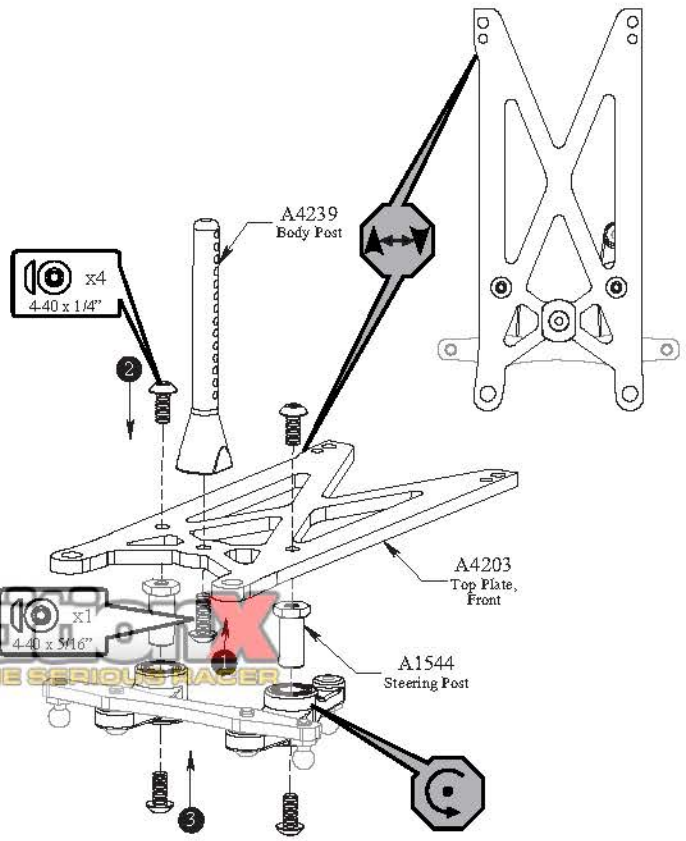

Competition
A WEBSITE FOR THE SERIOUS RACER

❑ STEP A-06 *Top Plate Installations*

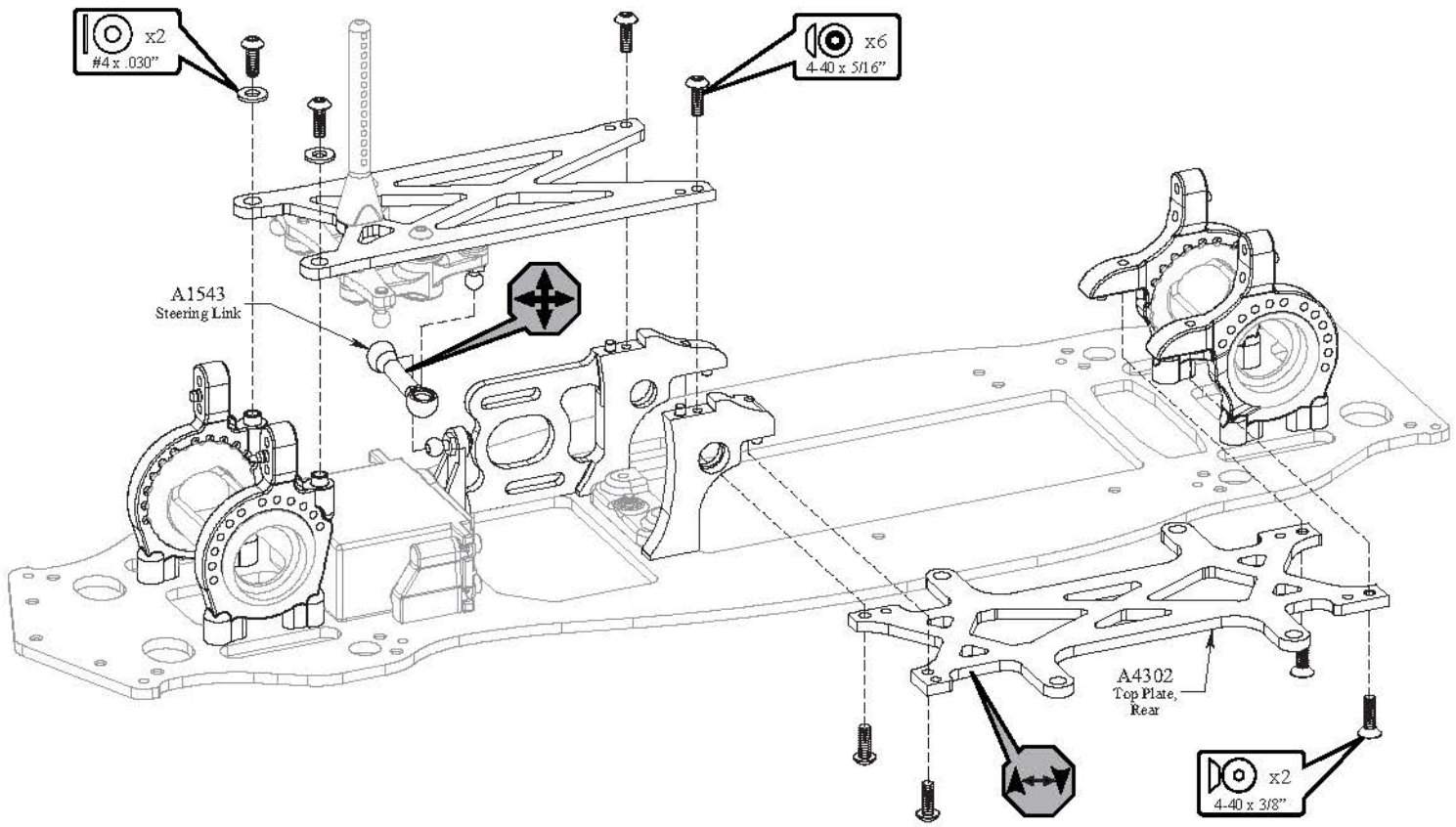

❑ STEP A-07 *Bag A Completed Assembly*

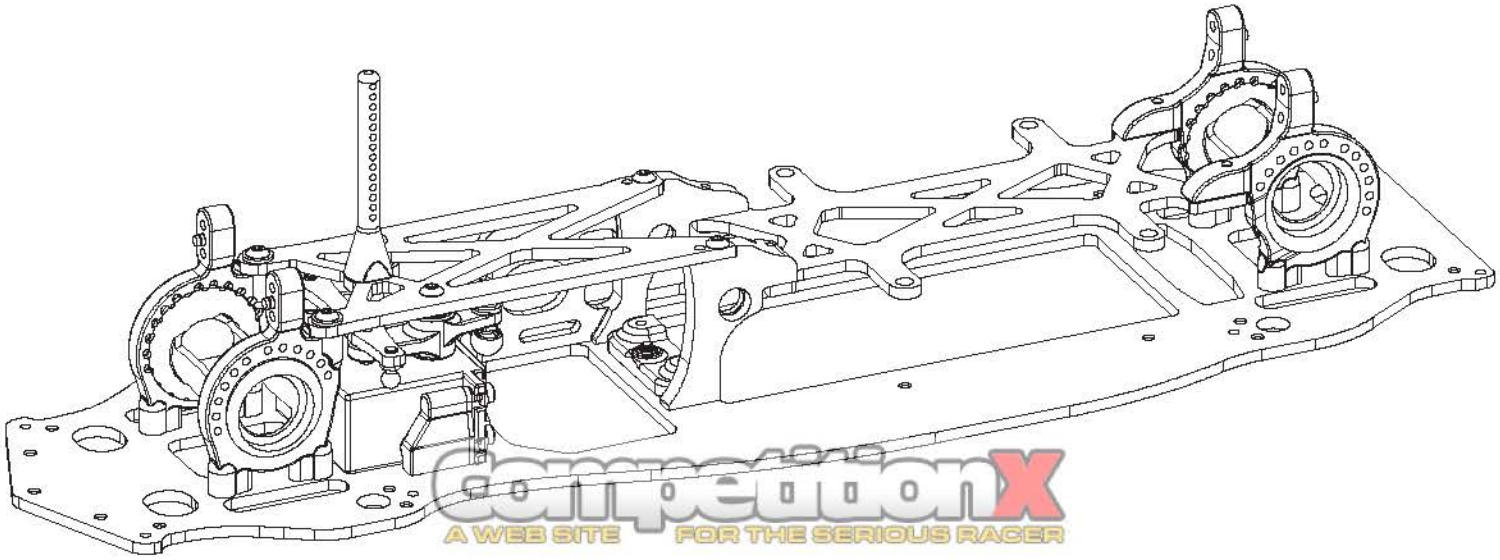

competitionX
A WEB SITE FOR THE SERIOUS RACER

❑ STEP B-01 *Drive Pulley Assemblies*

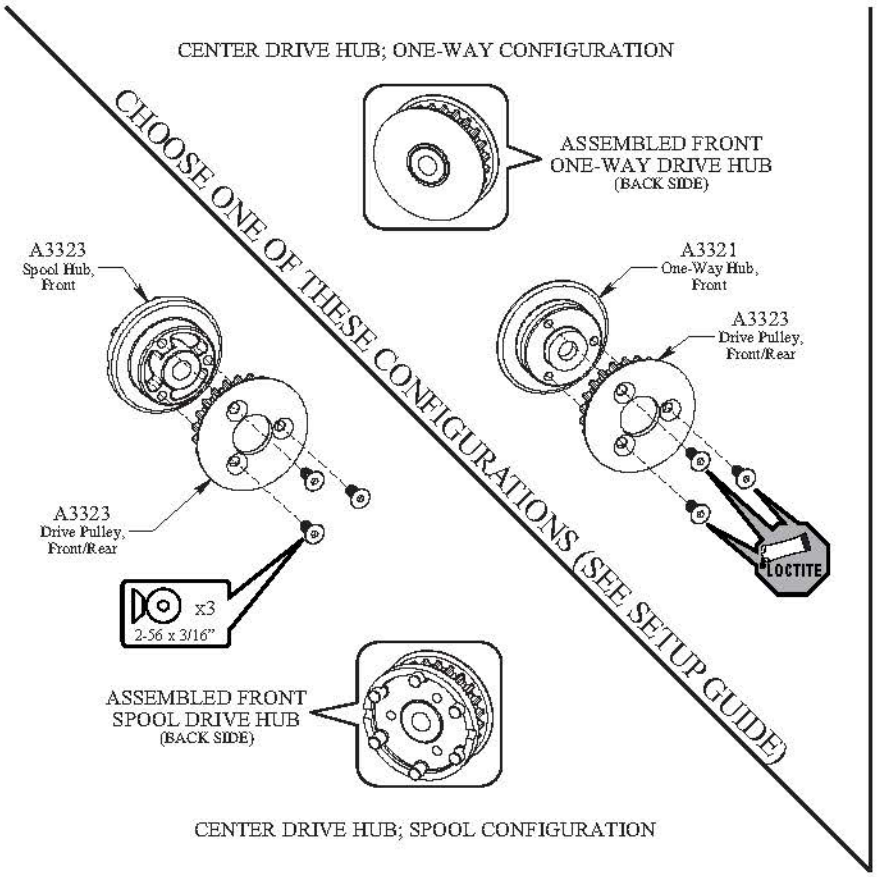

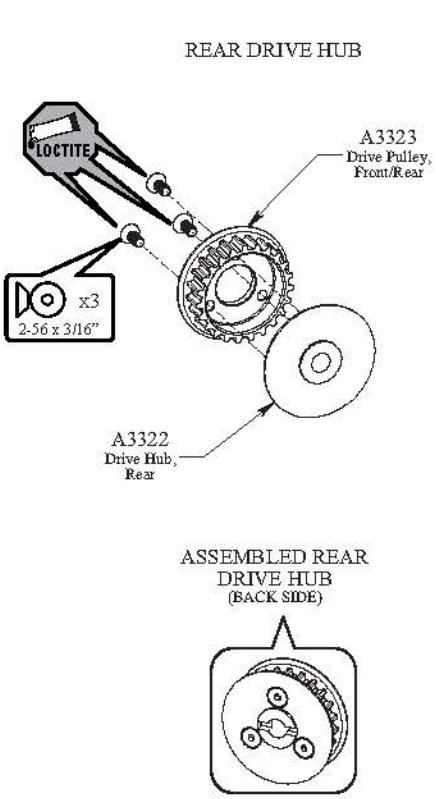

❑ STEP B-02 *Center Shaft Installation*

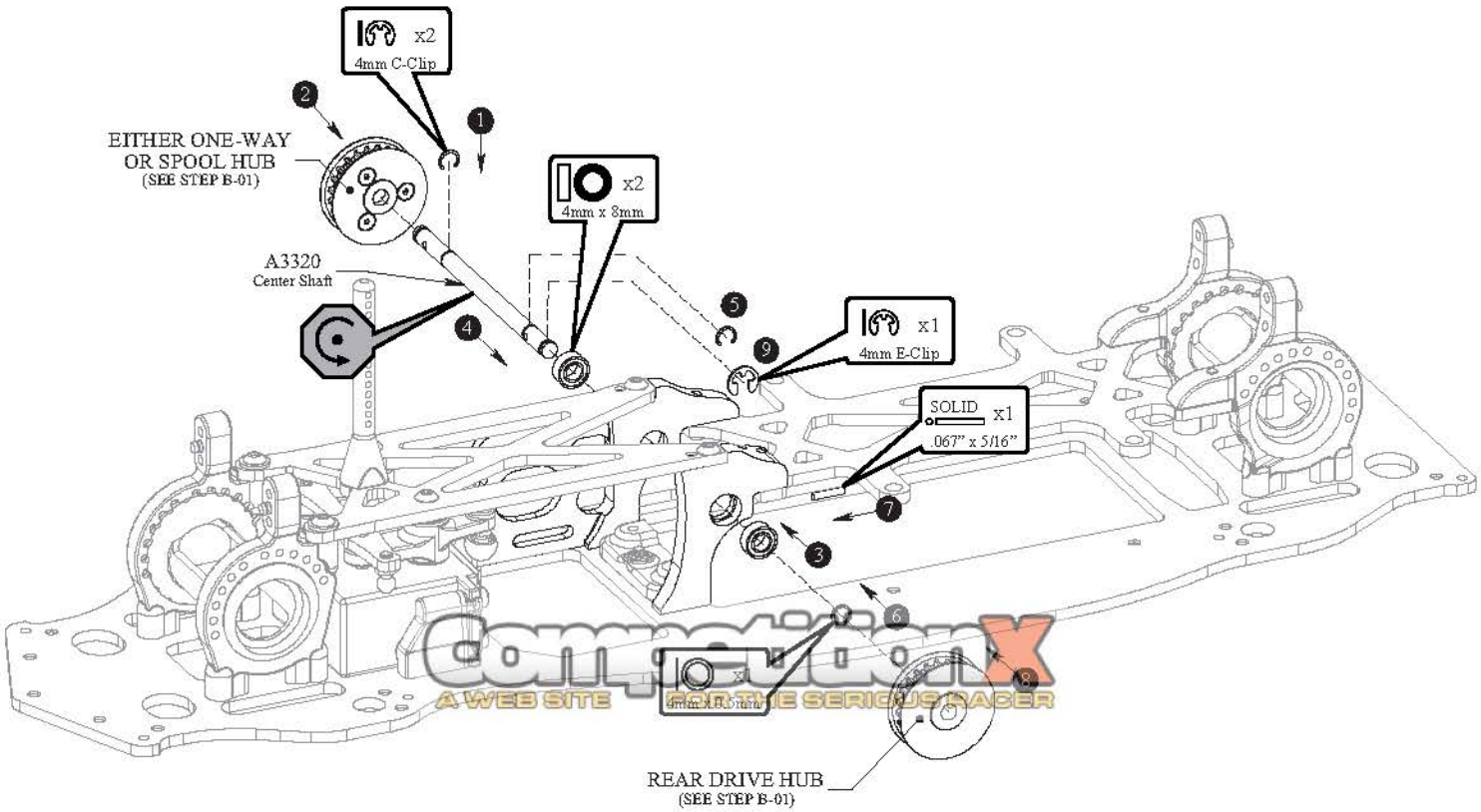

CompetitionX A WEB SITE FOR THE SERIOUS RACER

❑ STEP B-03 Differential Assembly

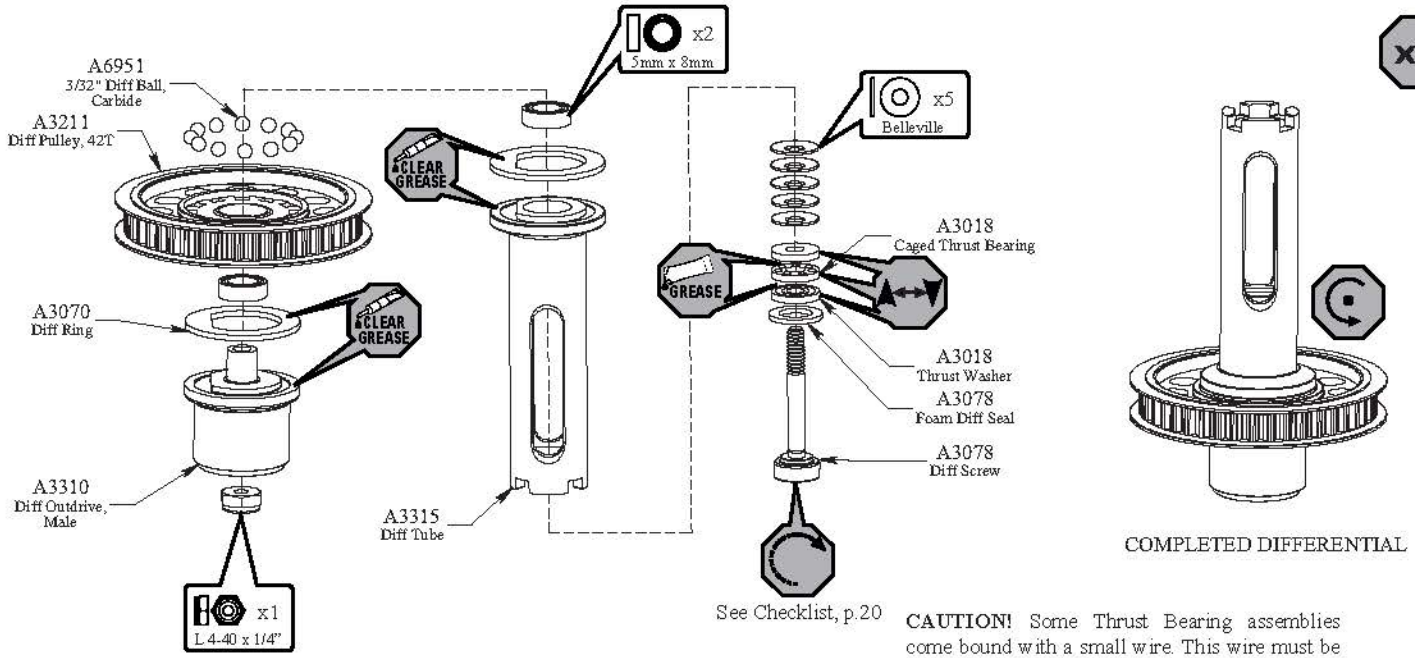

- Apply a small amount of Clear Diff Grease to the Diff Outdrive and the Diff Tube before installing the Diff Ring.
- Apply enough Clear Diff Grease to the top side of the Diff Rings, or to both sides of recessed Ball section in the Diff Pulley (after Diff Balls are installed) to cover the Diff Balls when the Diff is assembled.
- Assemble the Diff and tighten until some resistance is felt, see the Final Checklist for final Diff adjustment procedures.

CAUTION! Some Thrust Bearing assemblies come bound with a small wire. This wire must be removed before installing the Thrust Bearing.

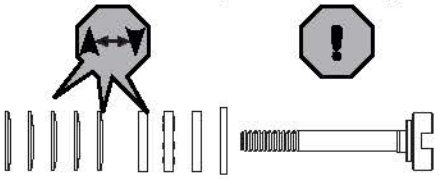

❑ STEP B-04 Differential Installation

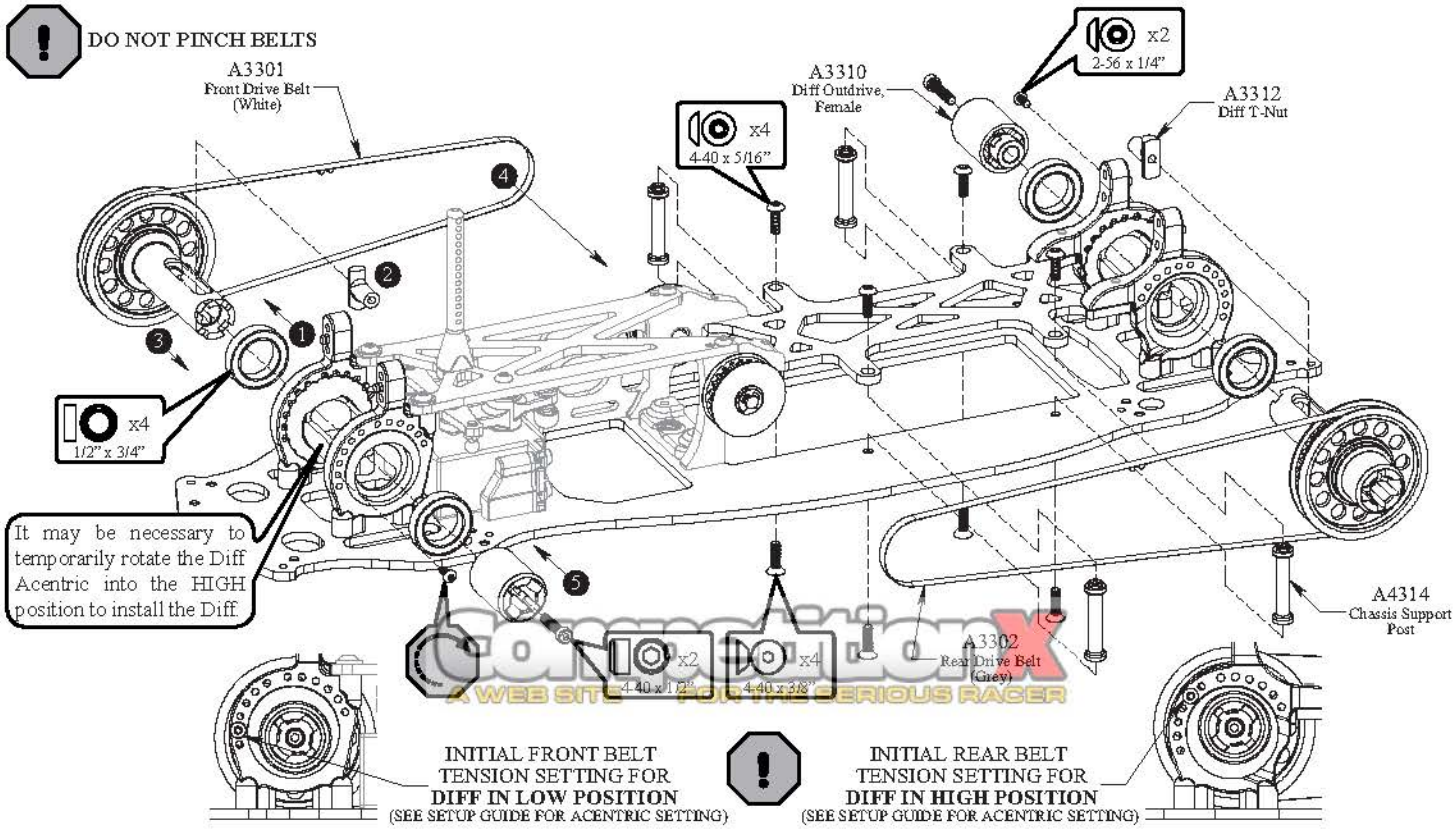

CompetitionX
A WEB SITE FOR THE SERIOUS RACER

❑ STEP B-05 Spur Gear Installation

CENTER ONE-WAY ASSEMBLY

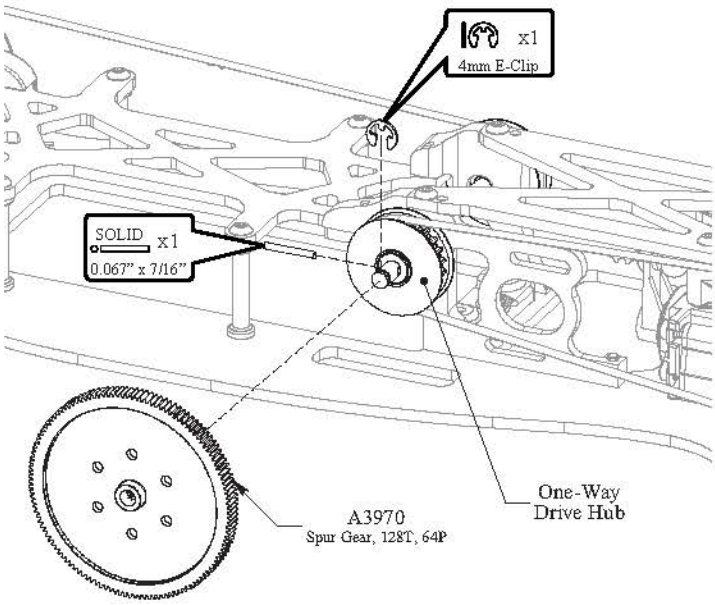

CENTER SPOOL ASSEMBLY

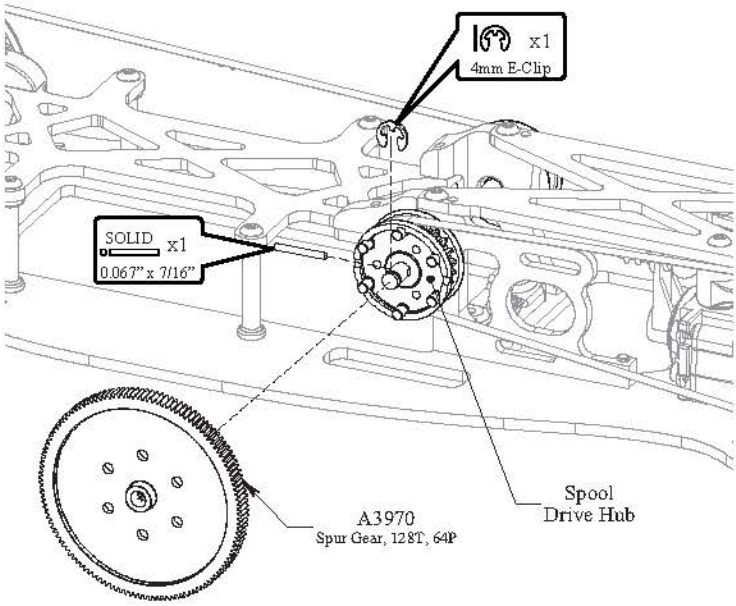

❑ STEP B-06 Bag B Completed Assembly

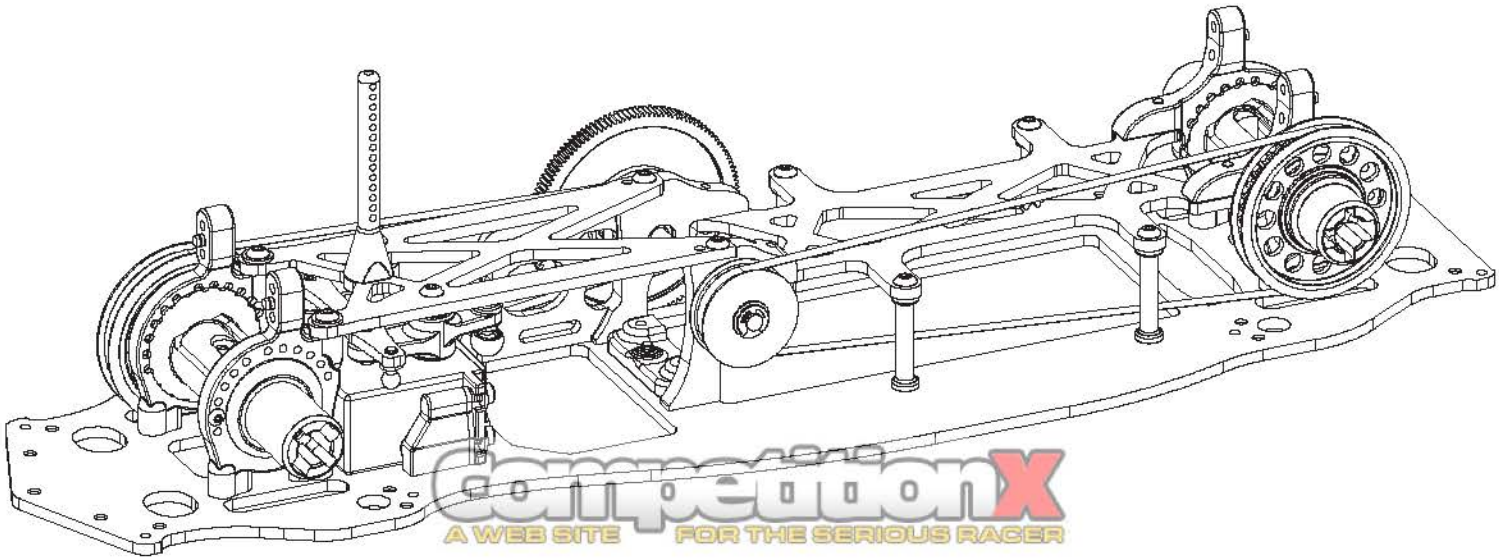

competitionX
A WEB SITE FOR THE SERIOUS RACER

❑ STEP C-01 LCD and Spindle Assembly

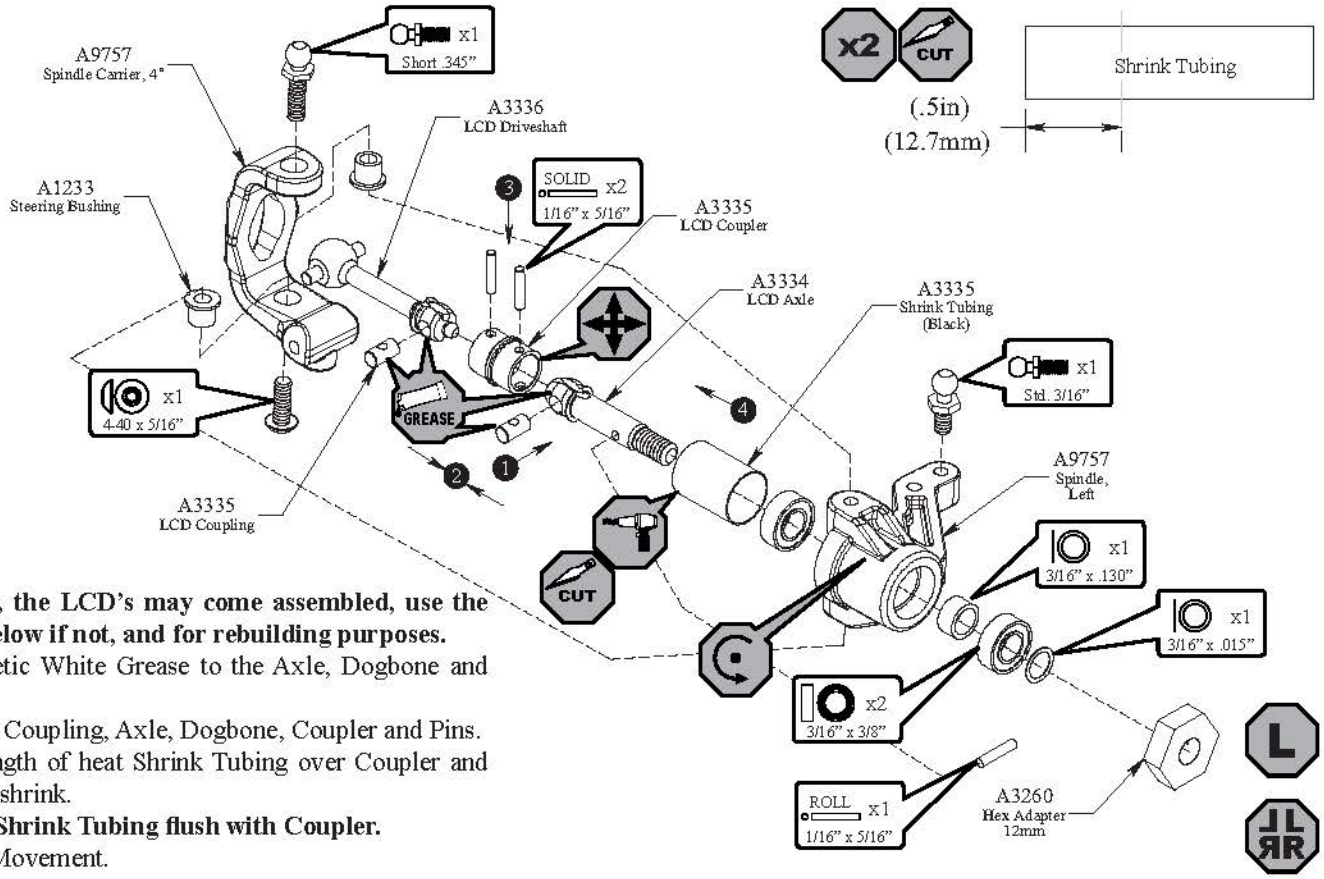

- **In some kits, the LCD's may come assembled, use the guidelines below if not, and for rebuilding purposes.**
- Apply Synthetic White Grease to the Axle, Dogbone and Couplings.
- Assemble the Coupling, Axle, Dogbone, Coupler and Pins.
- Install cut length of heat Shrink Tubing over Coupler and apply heat to shrink.
- **Trim excess Shrink Tubing flush with Coupler.**
- Ensure Free Movement.

❑ STEP C-02 Front Arm Assembly

- See Setup Guide for Droop and Up-Travel adjustments.

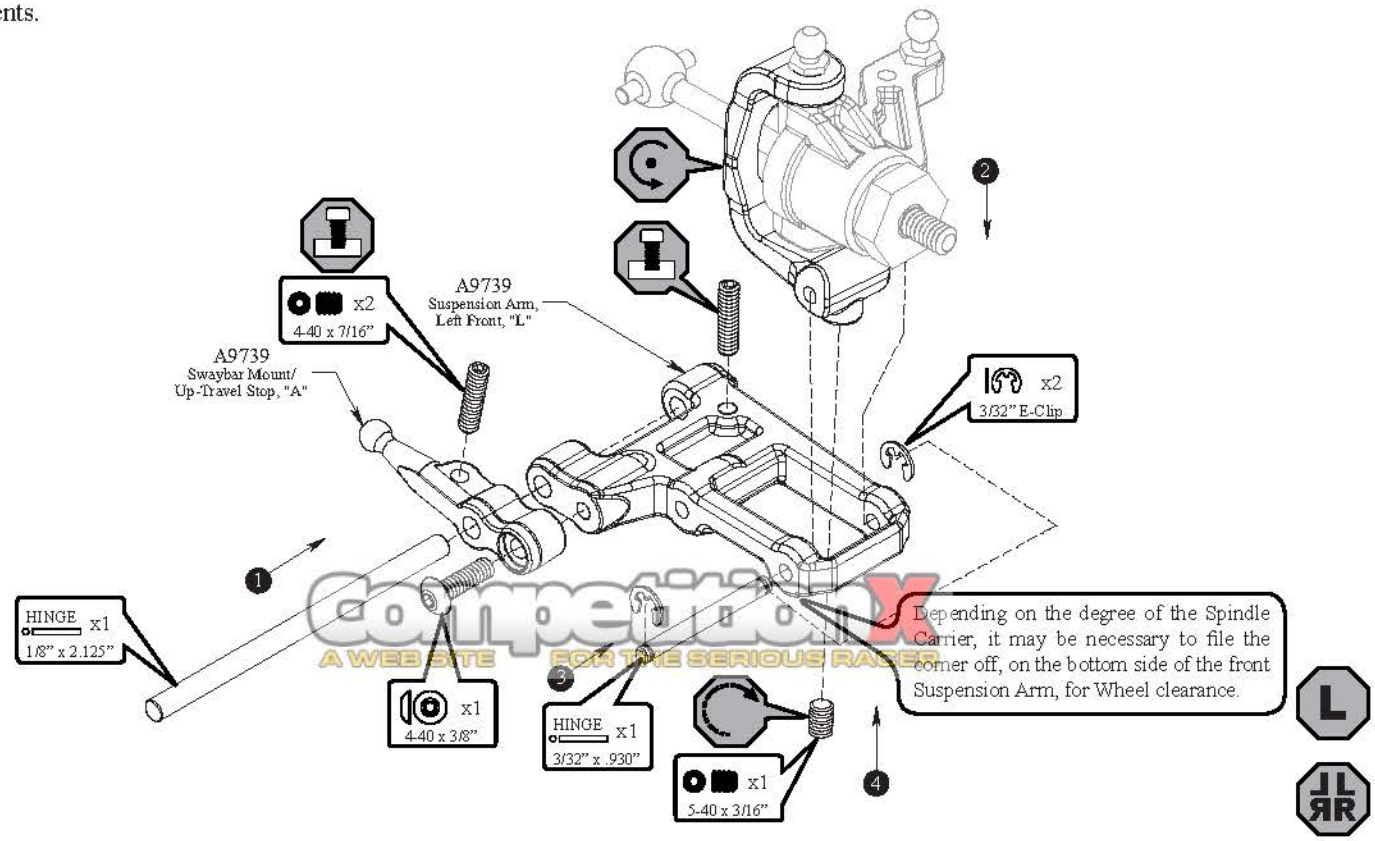

CompetitionX A WEB SITE FOR THE SERIOUS RACER

❑ STEP C-03 Front Shock Tower Assembly

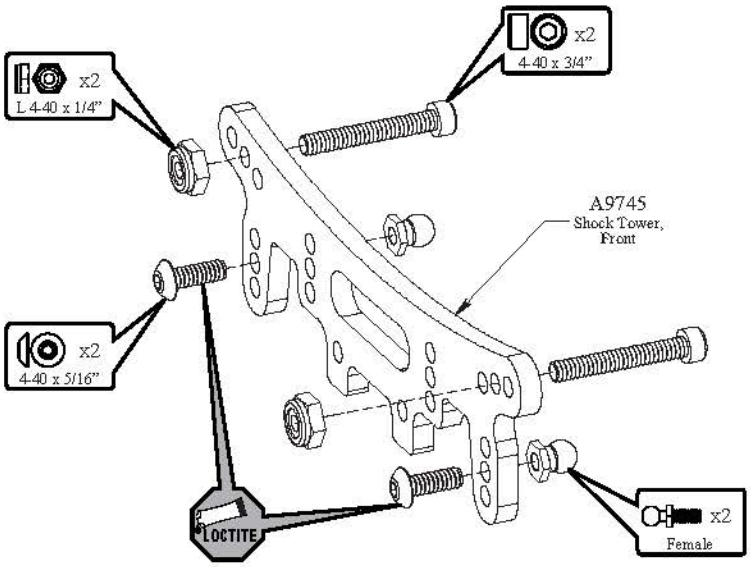

❑ STEP C-04 Front Suspension Installation

- Be sure to install the Locating Pin Screws before attaching the Pivot Blocks to the Chassis.
- Install each Locating Pin Screw so that the threads do not protrude from the bottom of the part, but the smooth portion does.

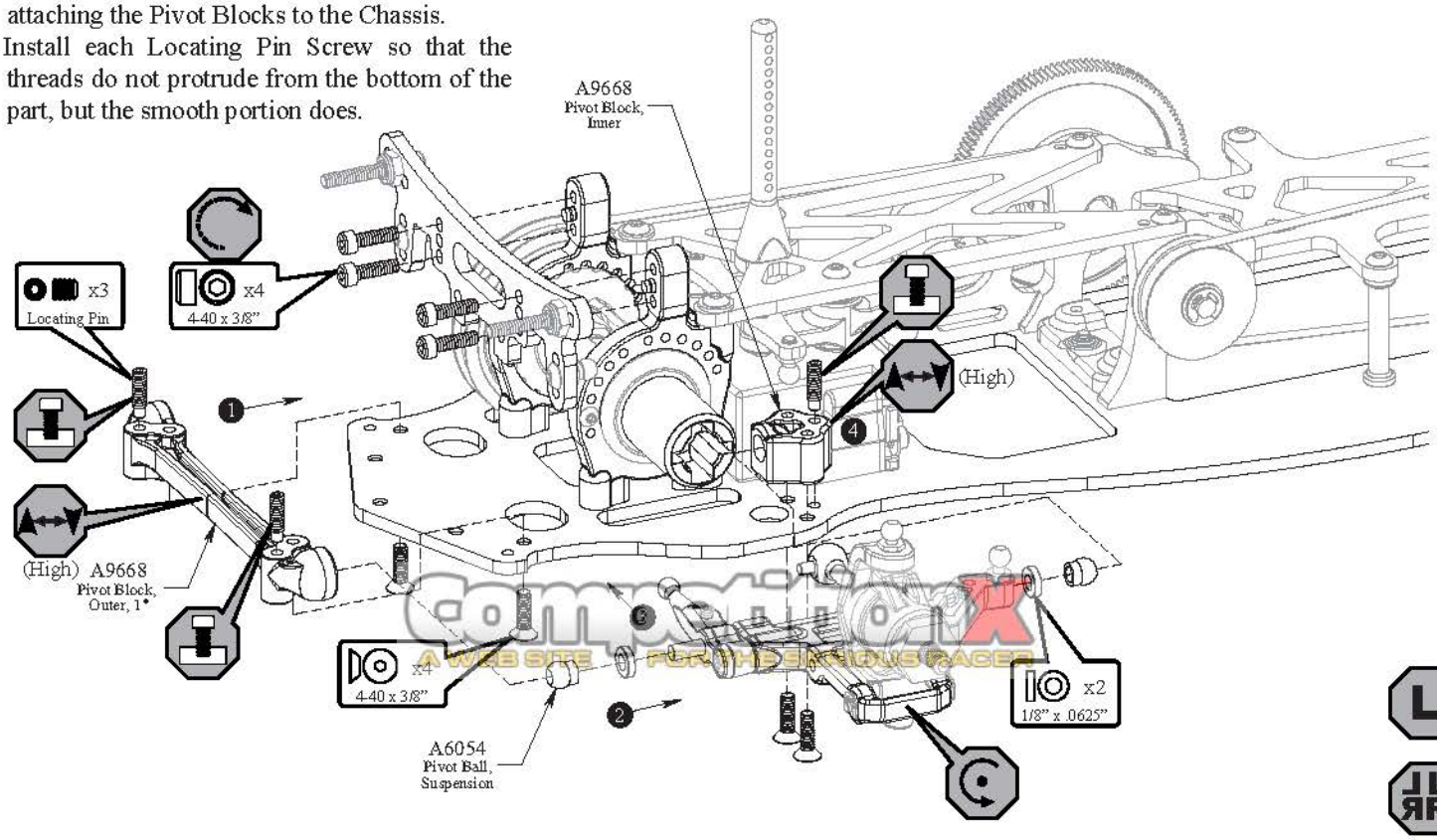

competitorX A WEB SITE FOR THE SERIOUS RACER

❑ STEP C-05 Tierod Assembly and Installation

- Use the Team Losi flat wrench to hold the Turnbuckle while installing the short Rod Ends.
- Be sure to install the assembled Tierod onto the car with the chamfer (beveled portion of the square) on the driver's right side for easier adjustment later.

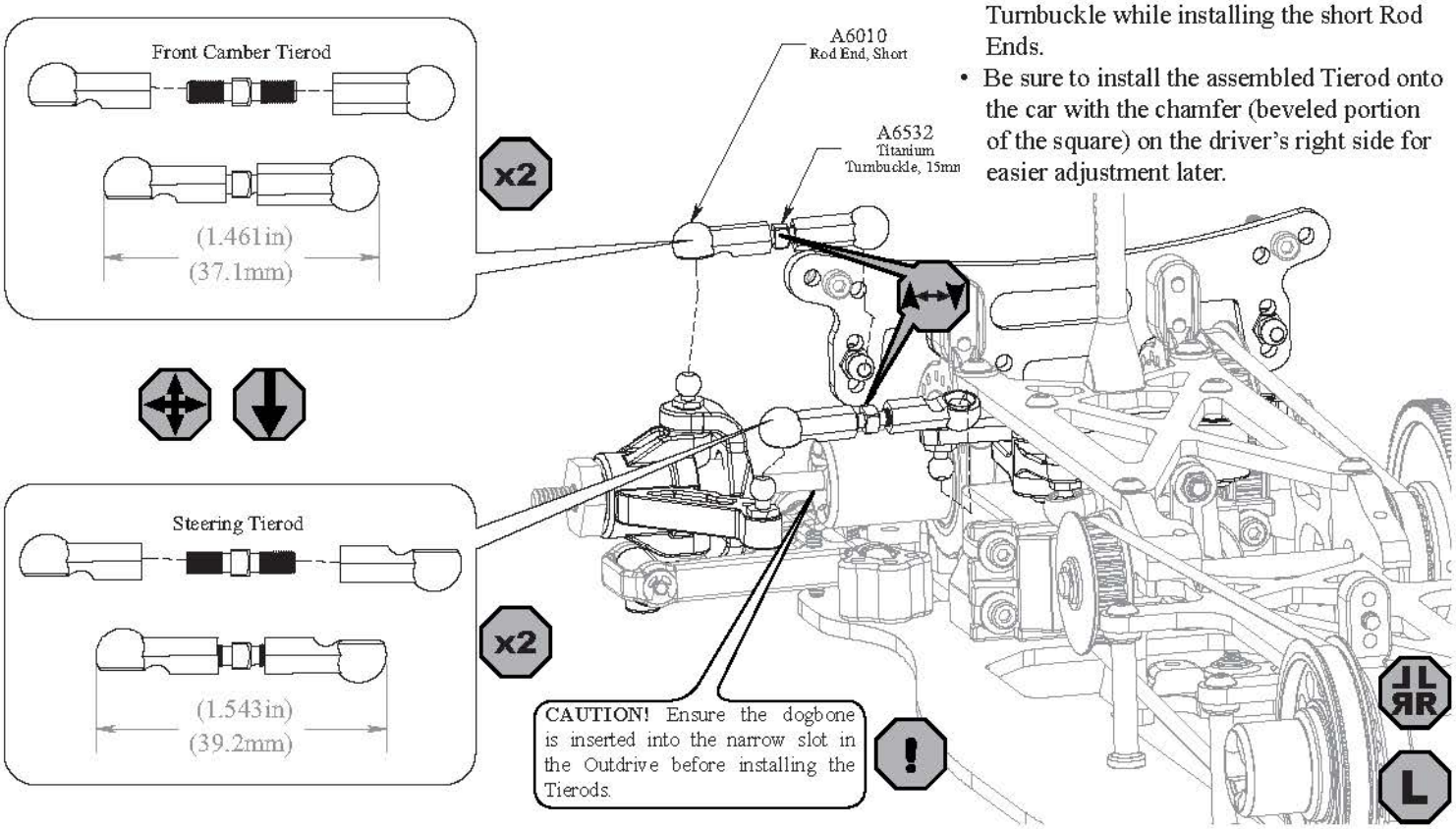

❑ STEP C-06 Bag C Completed Assembly

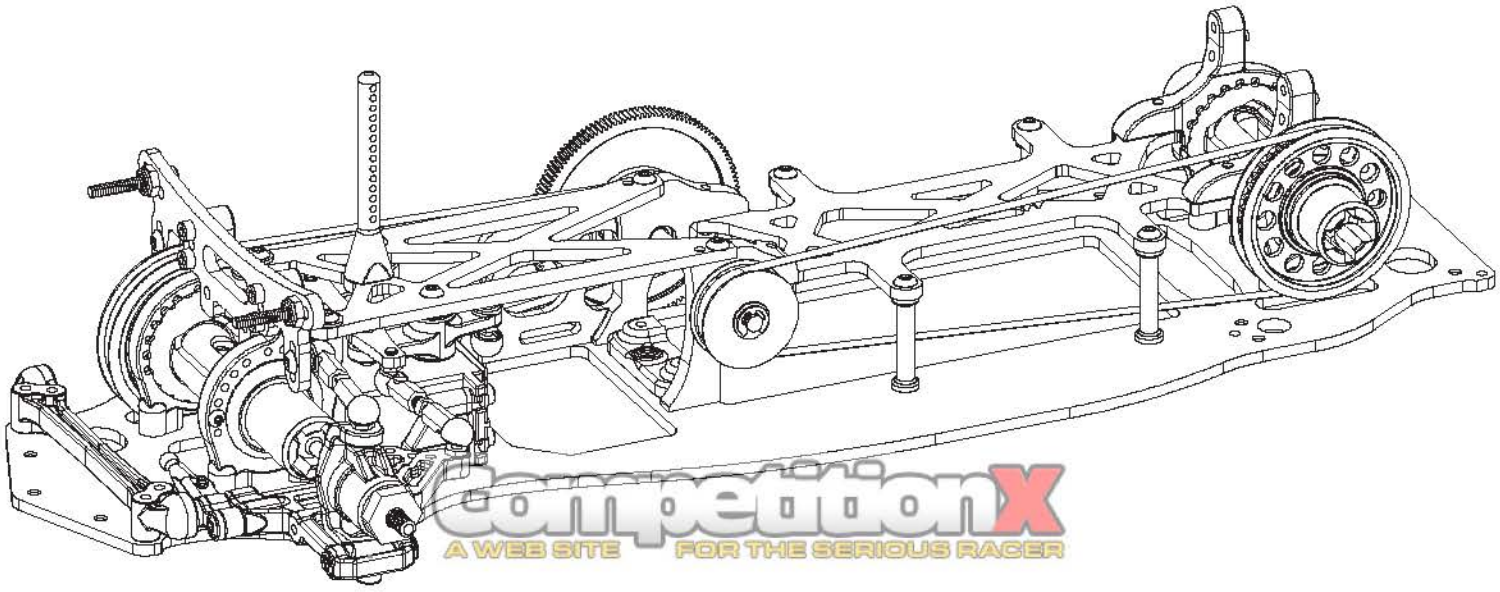

competitionX
A WEB SITE FOR THE SERIOUS RACER

❑ STEP D-01 CVD and Hub Assembly

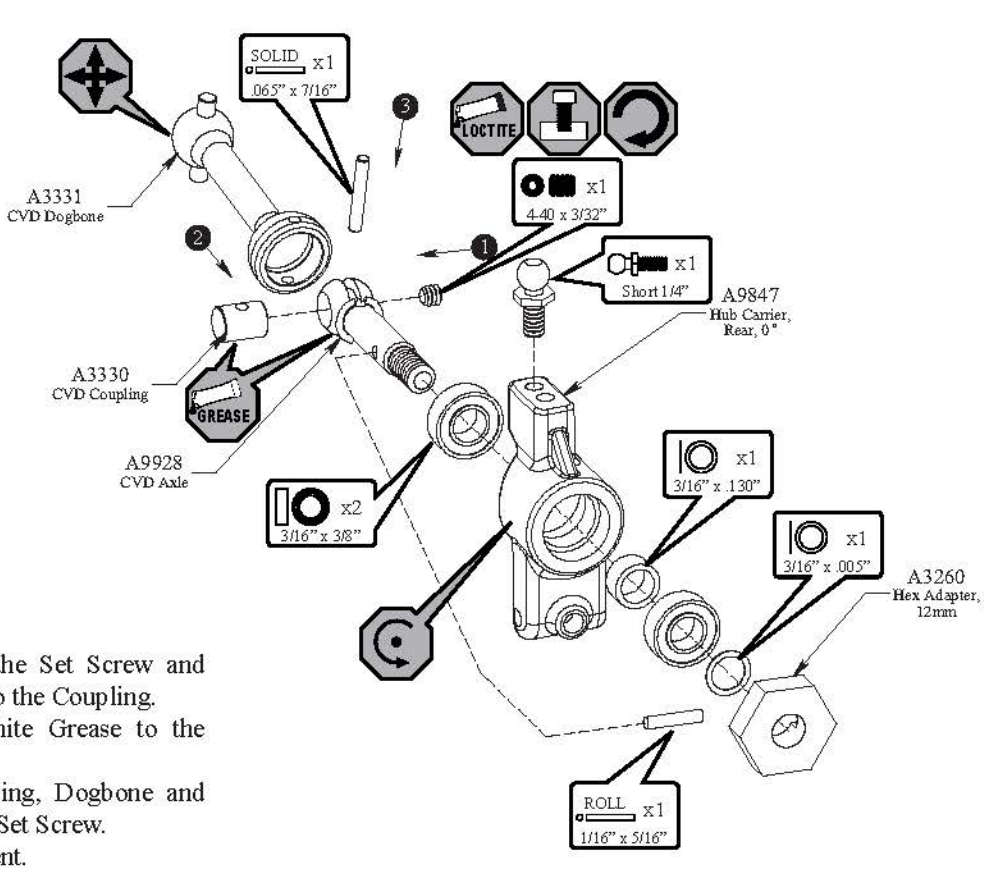

- Apply Loctite® to the Set Screw and partially thread it into the Coupling.
- Apply Synthetic White Grease to the Axle and Coupling.
- Assemble the Coupling, Dogbone and Pin, then tighten the Set Screw.
- Ensure Free Movement.

❑ STEP D-02 Rear Arm Assembly

- See Setup Guide for Droop and Up-Travel adjustments.

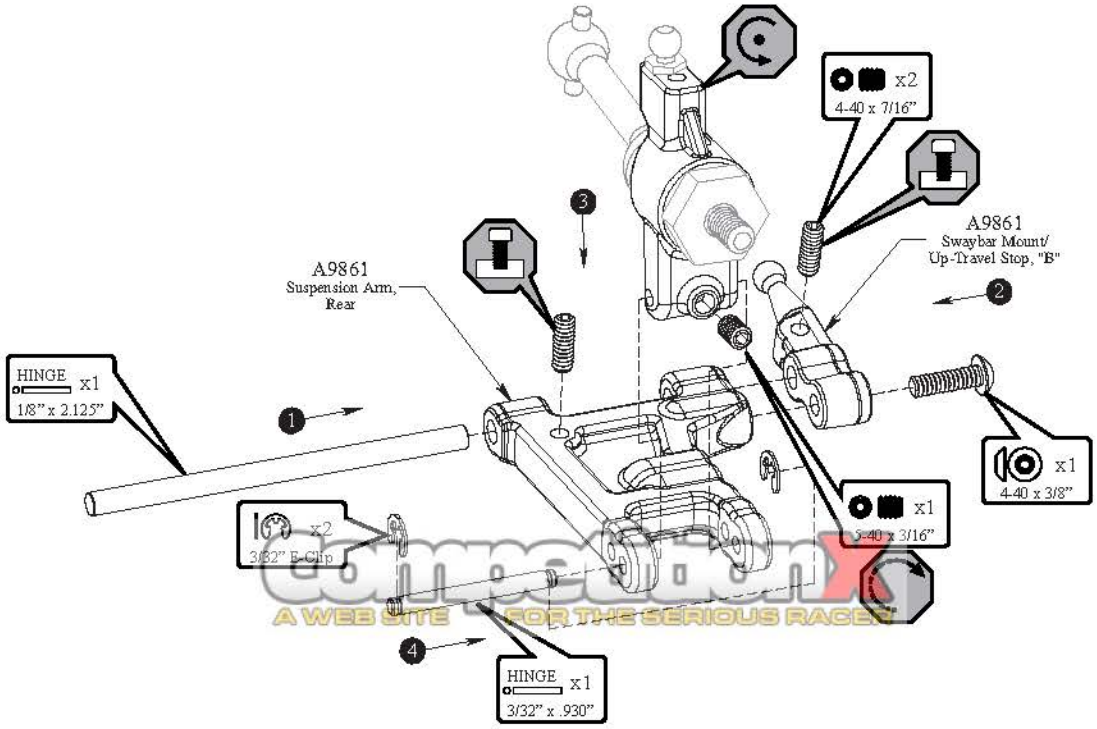

competitionRC
A WEB SITE FOR THE SERIOUS RACER

L

JL RR

❑ STEP D-03 Rear Shock Tower Assembly

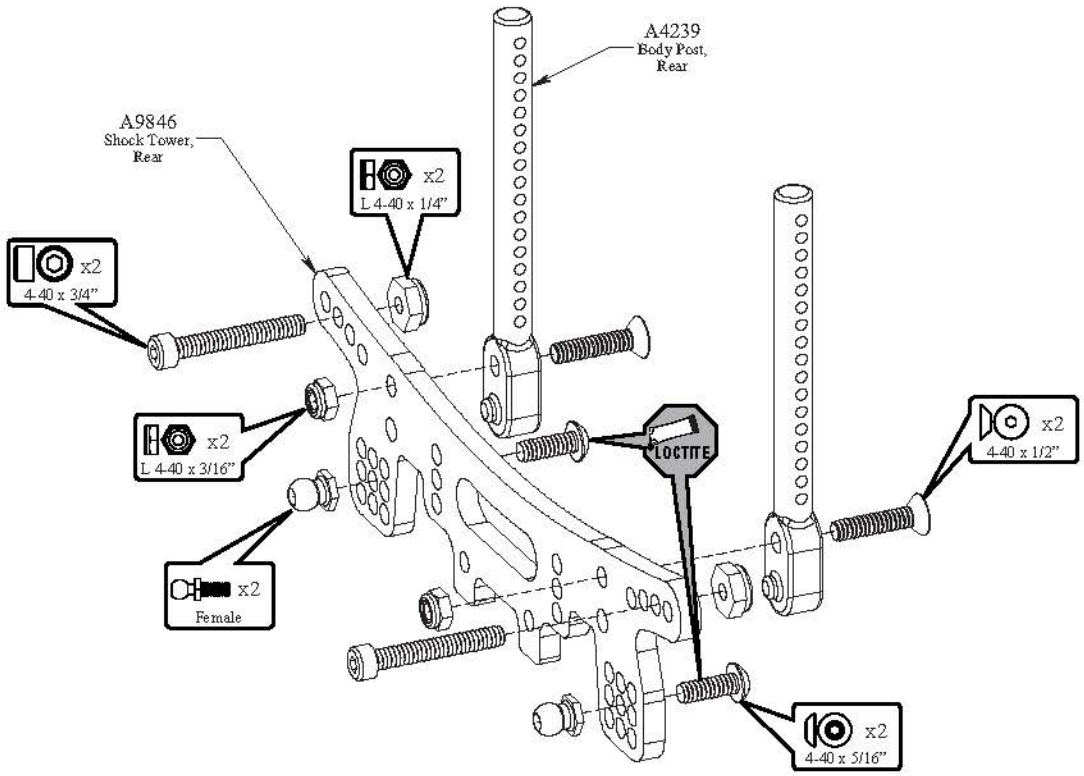

❑ STEP D-04 Rear Suspension Installation

- Be sure to install the Locating Pin Screws before attaching the Pivot Blocks to the Chassis.
- Install each Locating Pin Screw so that the threads do not protrude from the bottom of the part, but the smooth portion does.

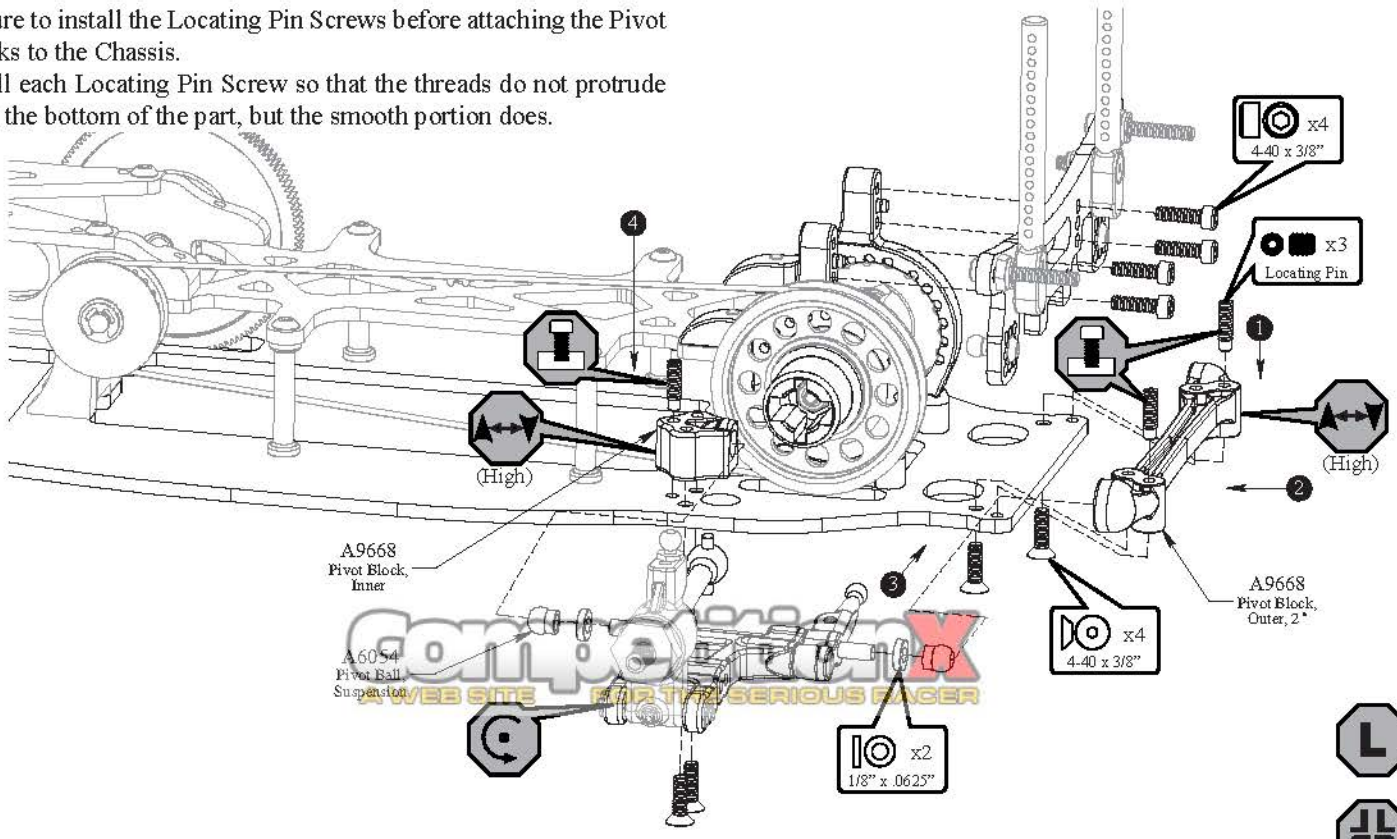

Competition X
WEB SITE FOR THE SERIOUS RACER

❑ STEP D-05 Tierod Assembly and Installation

- Use the Team Losi flat wrench to hold the Turnbuckle while installing the short Rod Ends.
- Be sure to install the assembled Tierod onto the car with the chamfer (beveled portion of the square) on the driver's right side for easier adjustment later.

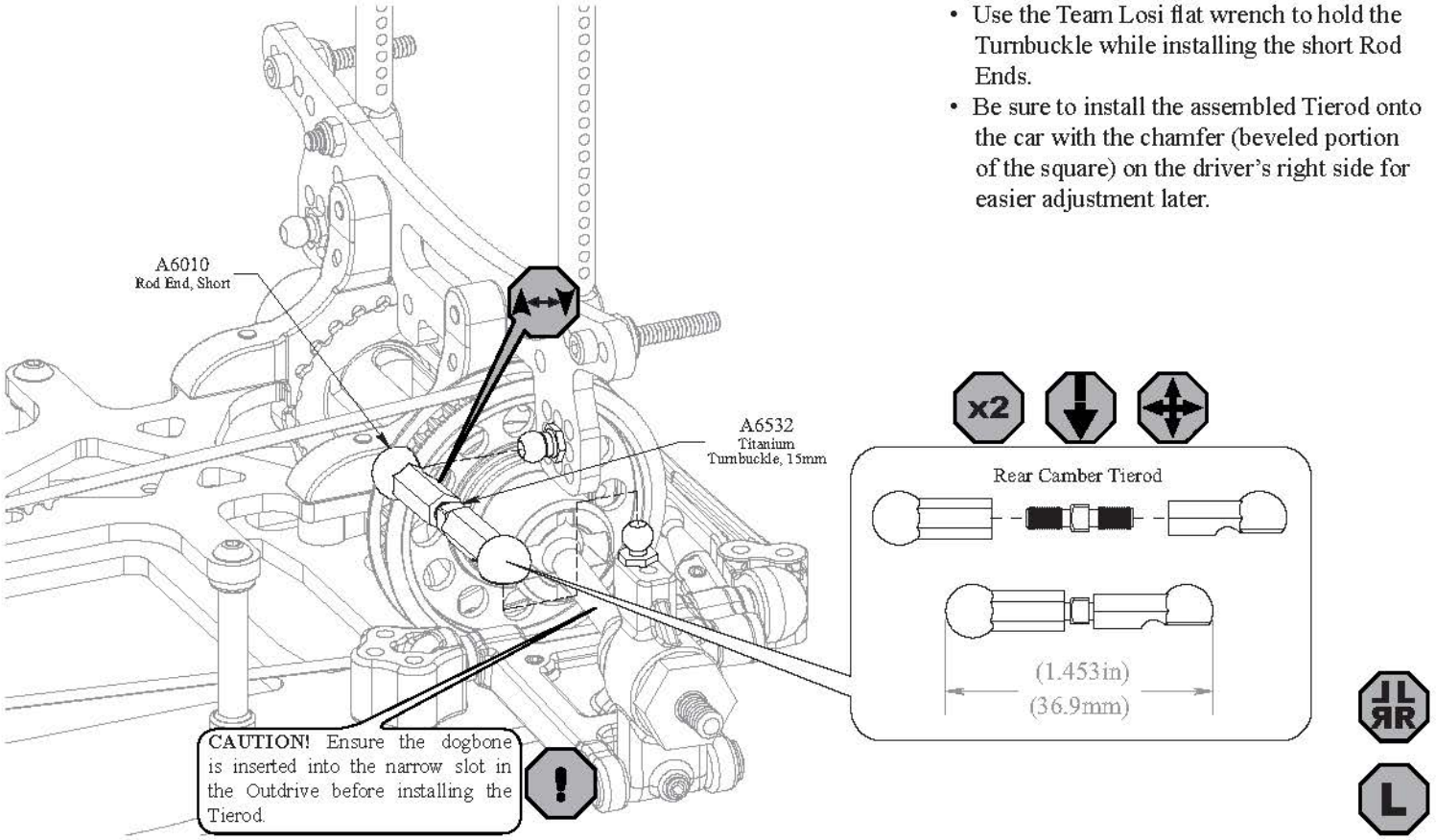

❑ STEP D-06 Bag C Completed Assembly

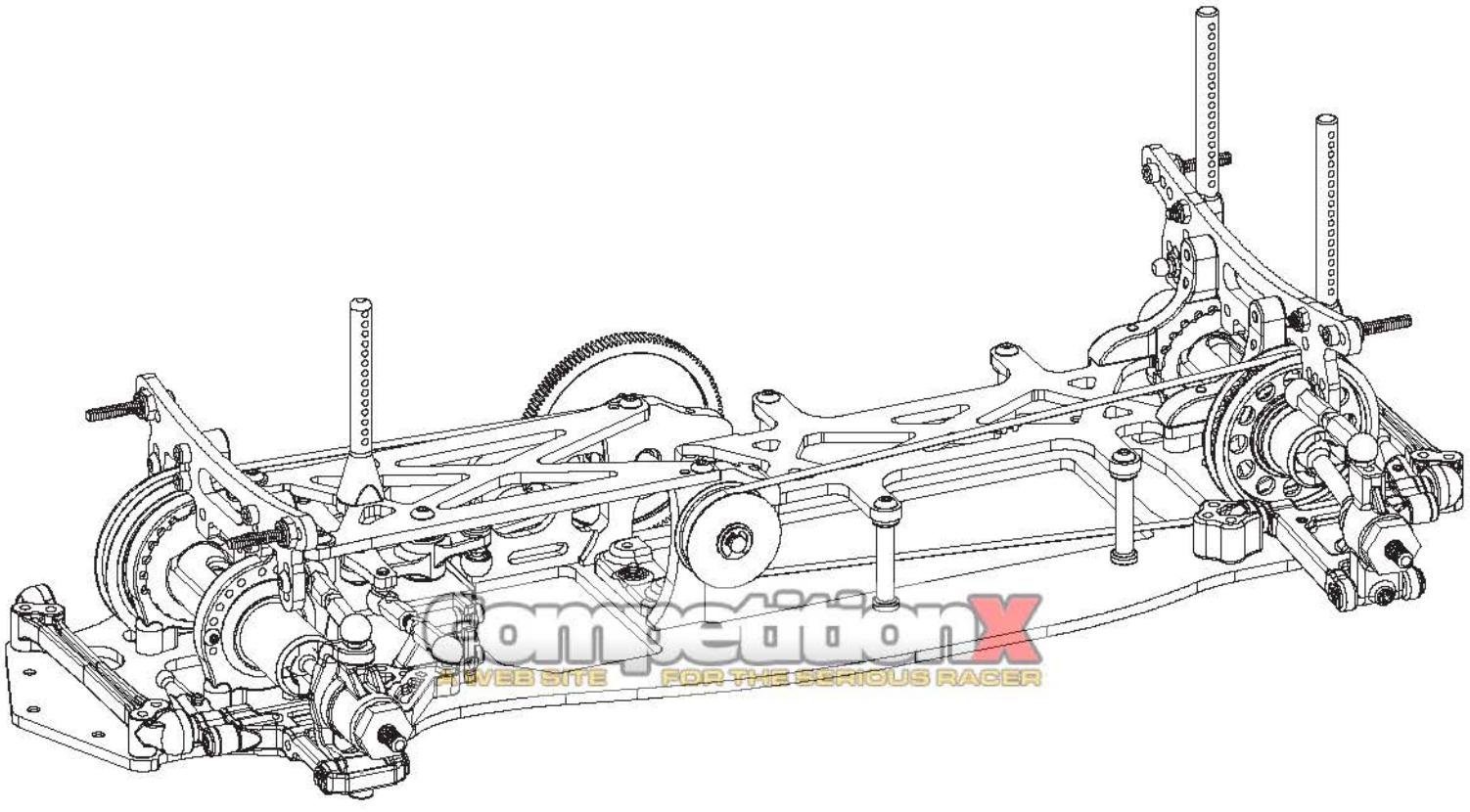

CompetitionX
THE WEB SITE FOR THE SERIOUS RACER

❑ STEP E-01 Shock Assembly

- Thread the 2-56 x 5/16" Cap Head Screw into Shock Shaft using a 5/64" (or 2mm) Allen wrench.
- Thread the Shaft into the Shock End (using the 2-56 Cap Head Screw) until the edge on the Shaft (between the smooth and threaded sections) meets with the edge of the Shock end. Now, holding the Shaft and Screw, turn the Shock End an additional 2.5 rotations. Usually it is best to use half-rotation increments (**DO NOT THREAD IT ON MORE THAN THIS**). Remove the Cap Head Screw.
- Place a drop of Shock Oil onto the end of the Shaft with the hole in it and slide it through the assembled Shock Body as shown.
- Install the Piston using the 2-56 x 1/4" Button Head Screw.
- Install the Shock Adjustment Nut O-ring into the Shock Adjustment Nut before installing the Nut onto the Shock Body.

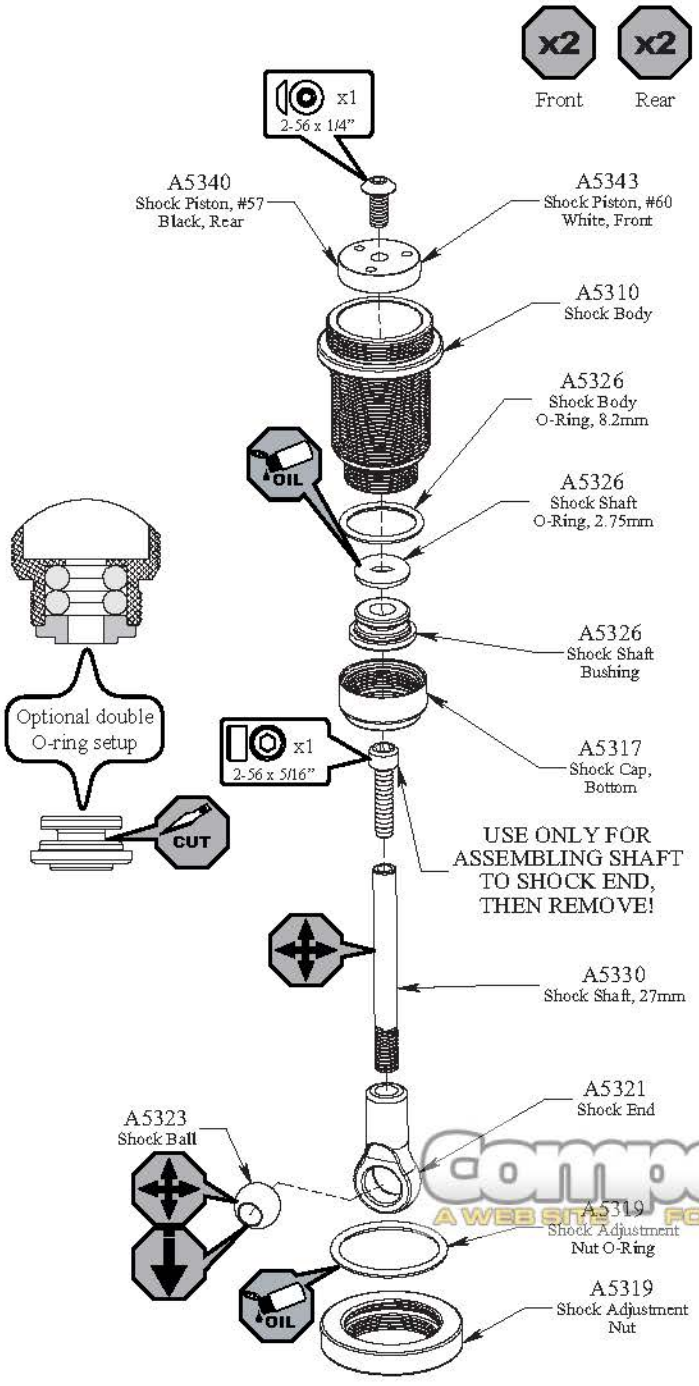

❑ STEP E-02 Final Shock Assembly

- Ensure the Shaft is fully extended when filling the Shock.
- Fill the Shock Body with 40wt. Shock Oil until the Oil is approximately 1/16" from the top of the Body.
- "Work" the Shock Shaft up and down a few times. This will release the air bubbles trapped beneath the Piston. Place the filled Shock, in the upright position, off to the side for a few minutes until the air bubbles escape from the Oil.
- Once all the air bubbles are out of the Oil, gently place the Shock Bladder onto the Shock as shown. Some Oil should "bleed" from the Shock.
- Place the plastic Shock Top into the Shock Cap (top) (NOTE: There are two Shock Tops, use two dots to designate left side shocks and one dot to designate right side shocks.
- Screw the Shock Cap onto the Body until some resistance is felt.
- Slowly push the Shock Shaft up. This will bleed excess Oil from the Shock.
- Tighten the cap all the way down **by hand.**
- Move the Shock Shaft up and down. The Shaft should be easy to push up into the Body of the Shock. If increased pressure is felt towards the top, there is to much oil in the Shock. Loosen the Shock Cap and "bleed" the Shock as done previously.
- Make sure each pair (front/rear) Shocks have the same rebound and compression. This is checked by holding one Shock in each hand horizontally and pushing them together by the Shock End. Watch carefully to ensure that both compress evenly. Now release both Shocks and again watch carefully as they should rebound the same.
- If there are differences, adjust the Shocks with the amount of Oil, either adding or bleeding (**THERE SHOULD BE NO AIR IN THE SHOCK WHEN COMPLETE**).

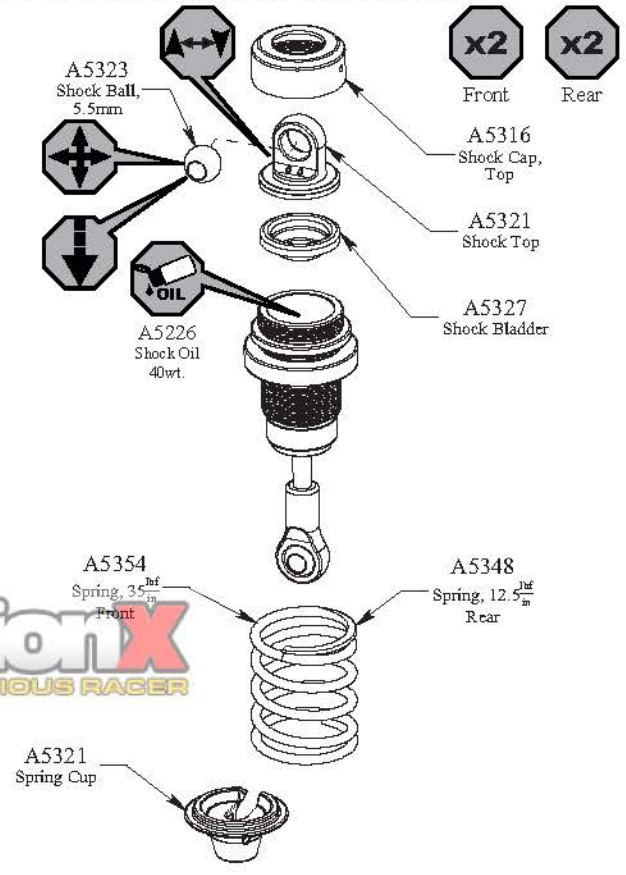

CompetitionX
A WEB SITE FOR THE SERIOUS RACER

❑ STEP E-03 *Front Shock Installation*

- Recall: Place shocks containing two dots, on the cap, on the left side of the car, and the shocks containing one dot, on the cap, on the right side of the car.

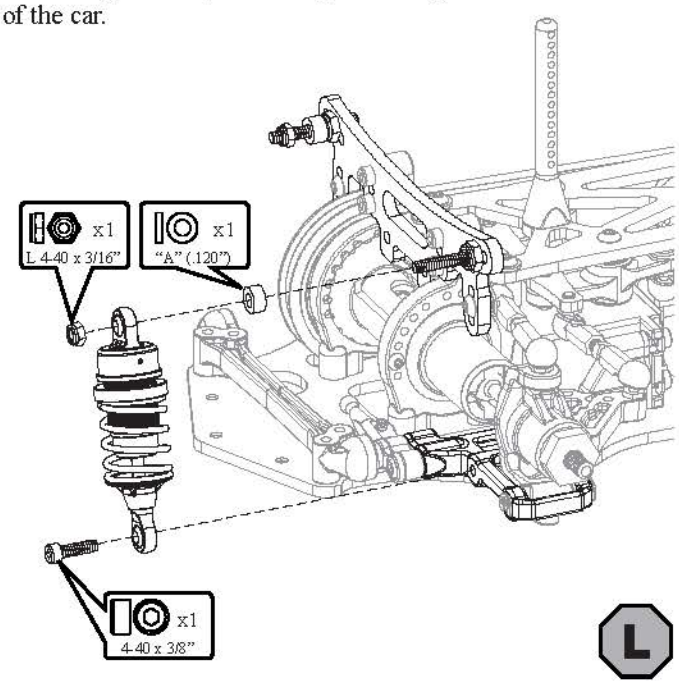

❑ STEP E-04 *Rear Shock Installation*

- Recall: Place shocks containing two dots, on the cap, on the left side of the car, and the shocks containing one dot, on the cap, on the right side of the car.

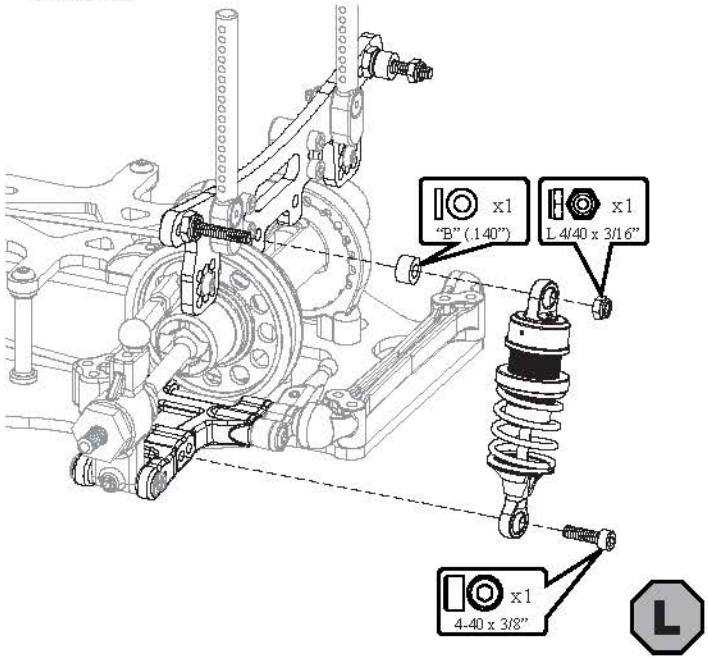

❑ STEP E-05 *Bag E Completed Assembly*

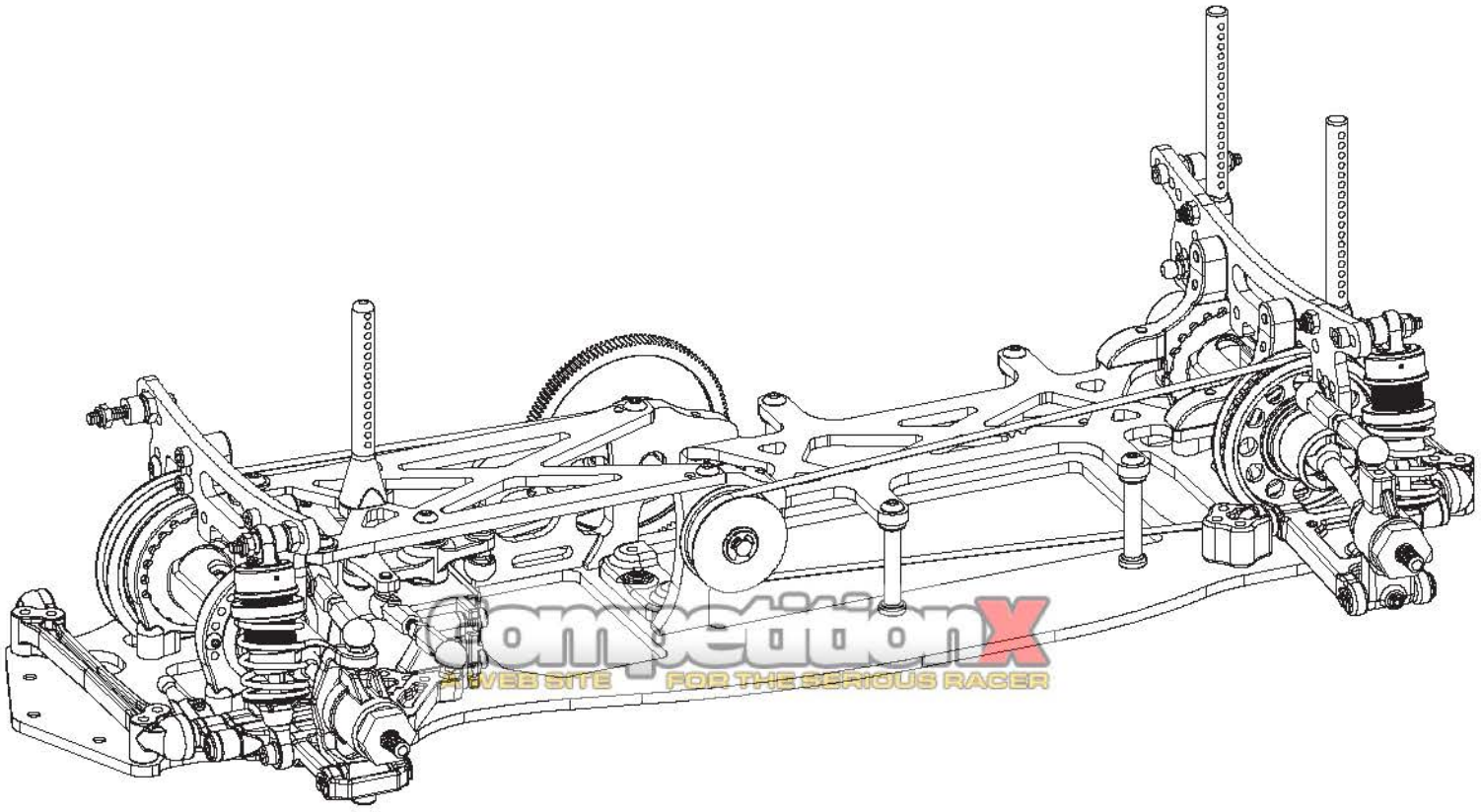

CompetitionX
WEB SITE FOR THE SERIOUS RACER

❑ STEP F-01 Bumper Assembly and Install

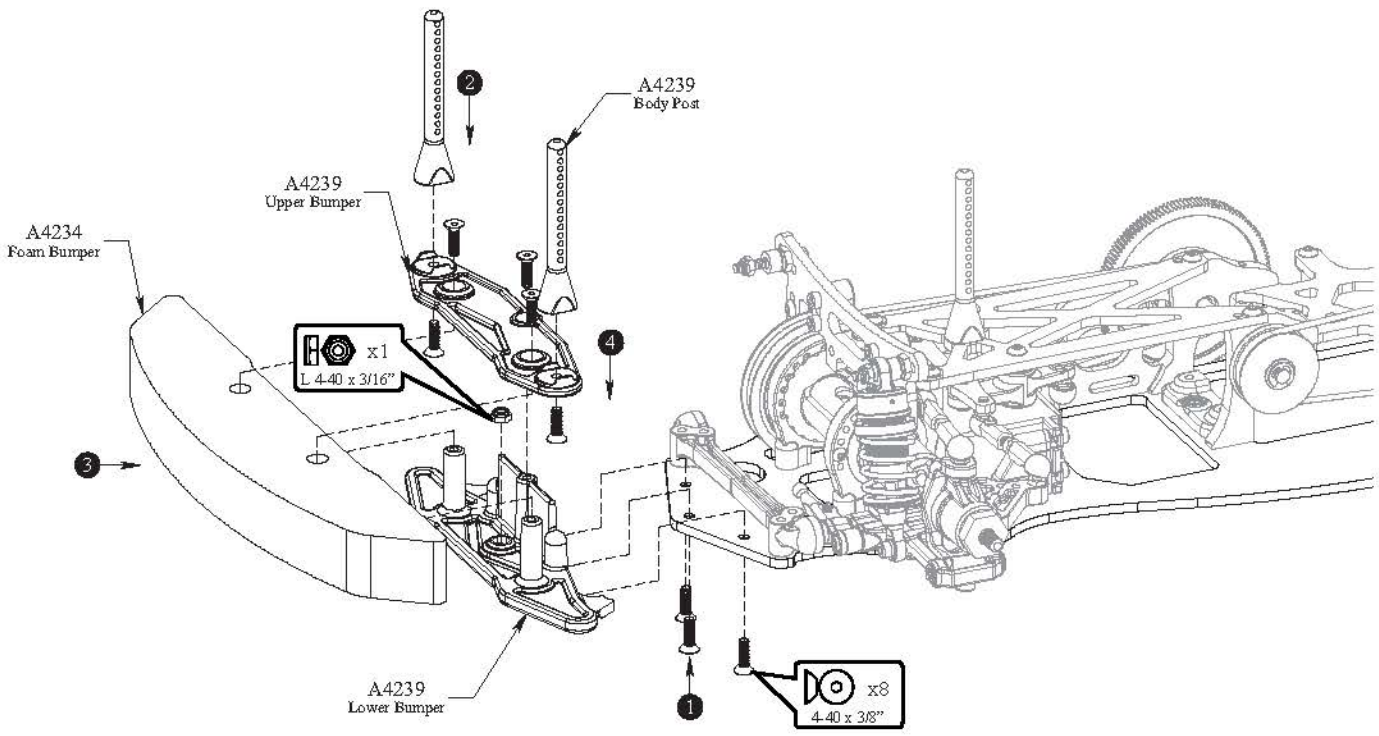

❑ STEP F-02 Receiver Installation

- It is very important to keep the servo wires away from the drivetrain components. It is recommended to use a small piece of double-sided tape to hold the wire to the Chassis, away from the Spur Gear, Belt, and Pulley.

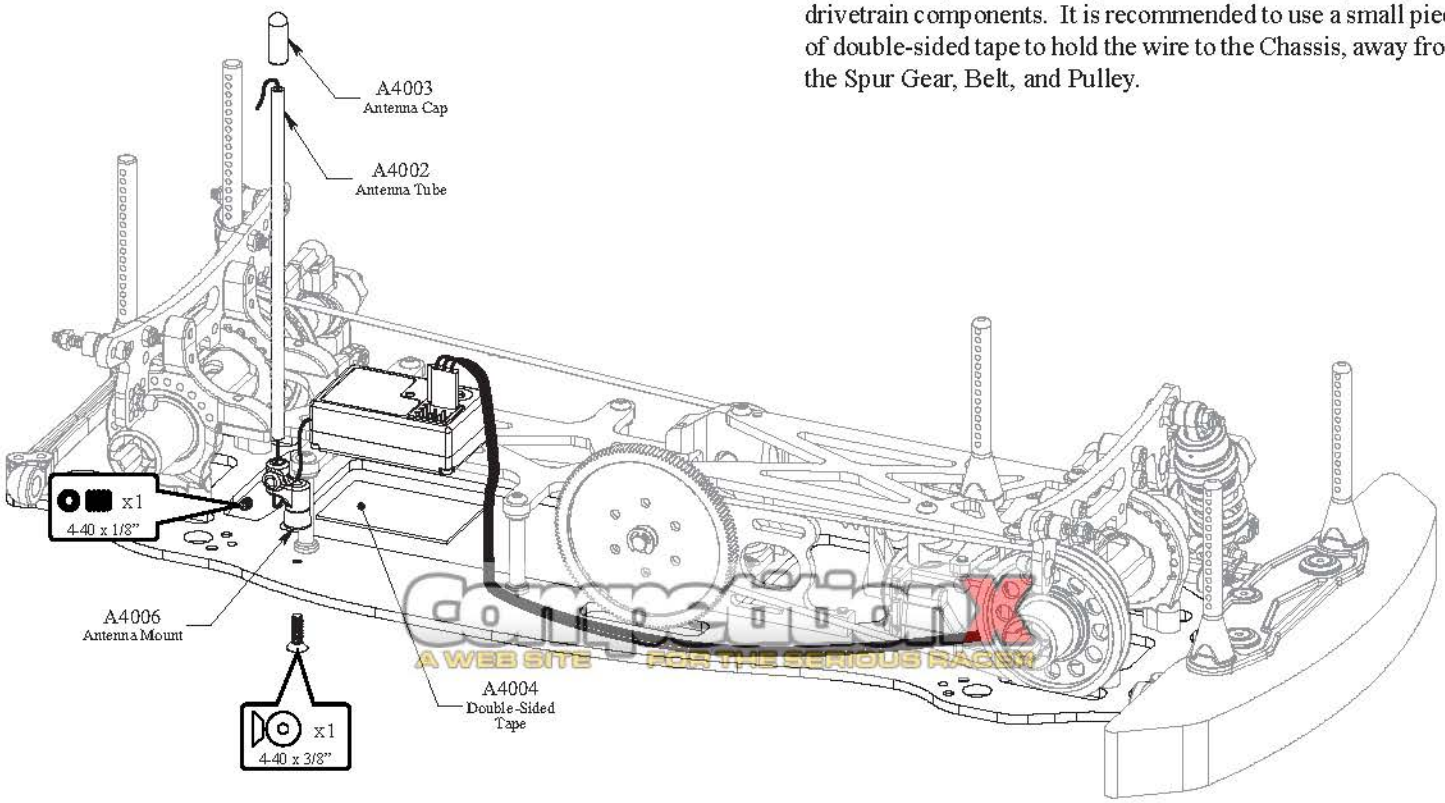

Competitive
A WEB SITE FOR THE SERIOUS RACER

❑ STEP F-03 Speed Control Installation

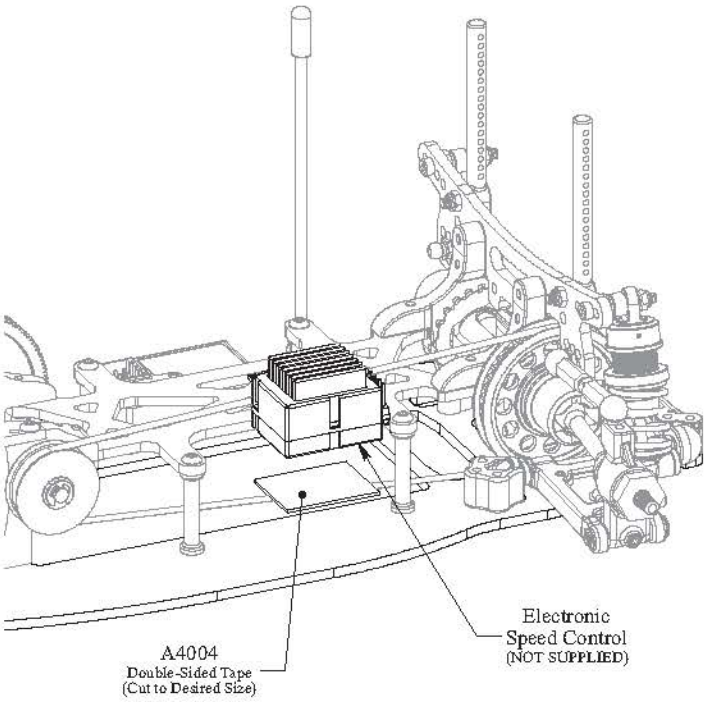

❑ STEP F-04 Battery Foam Installation

- Secure the Speed Control Wires to the Rear Top Plate by sticking them down with two Battery Foam pads.

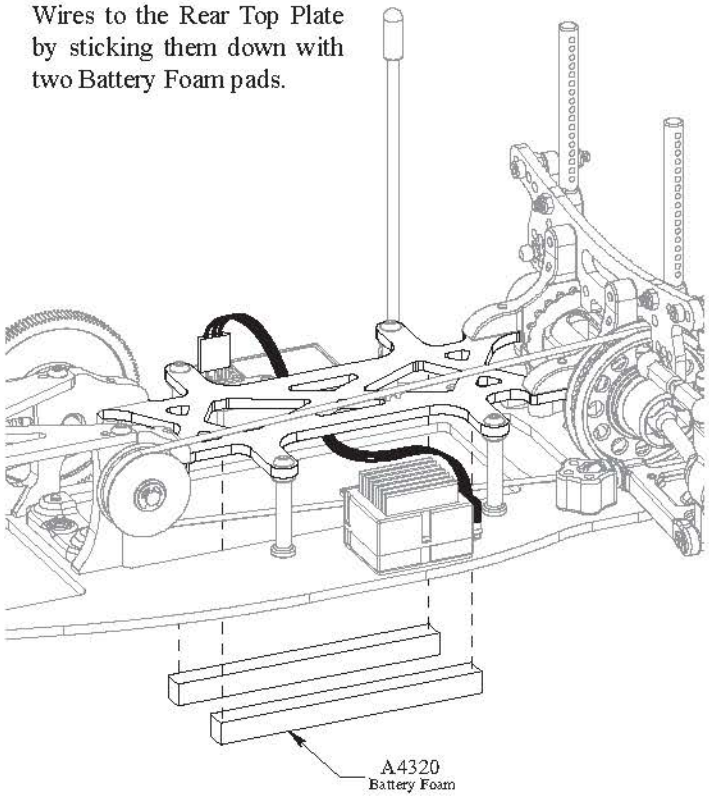

❑ STEP F-05 Motor Installation

- When setting the gear mesh, leave a small amount of backlash for proper function. Too much backlash will cause failure, so be sure to check the mesh at different points in the rotation of the Spur Gear.

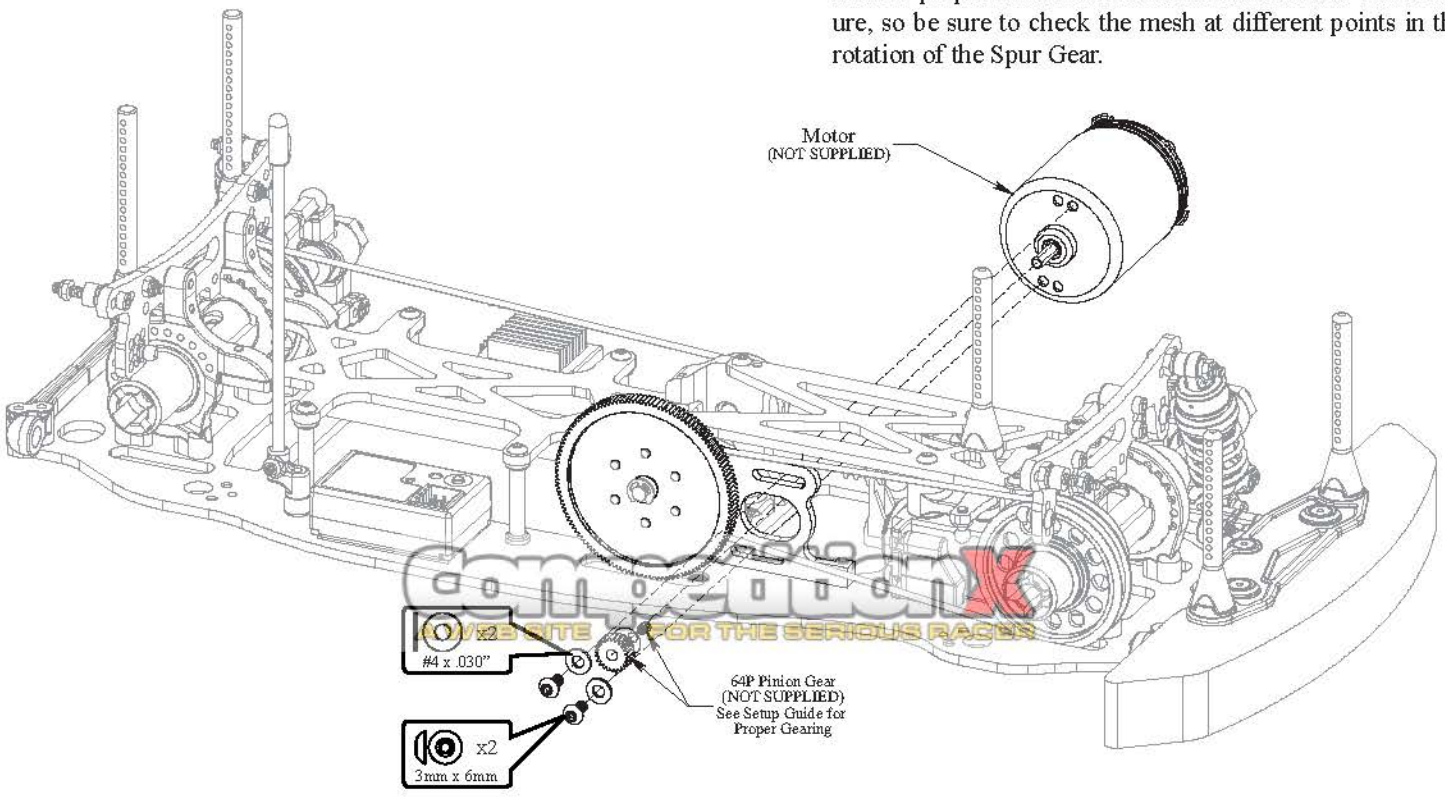

COMPETITION
OVER 25 SITE FOR THE SERIOUS RACER

❑ STEP F-06 Battery and Tray Installation

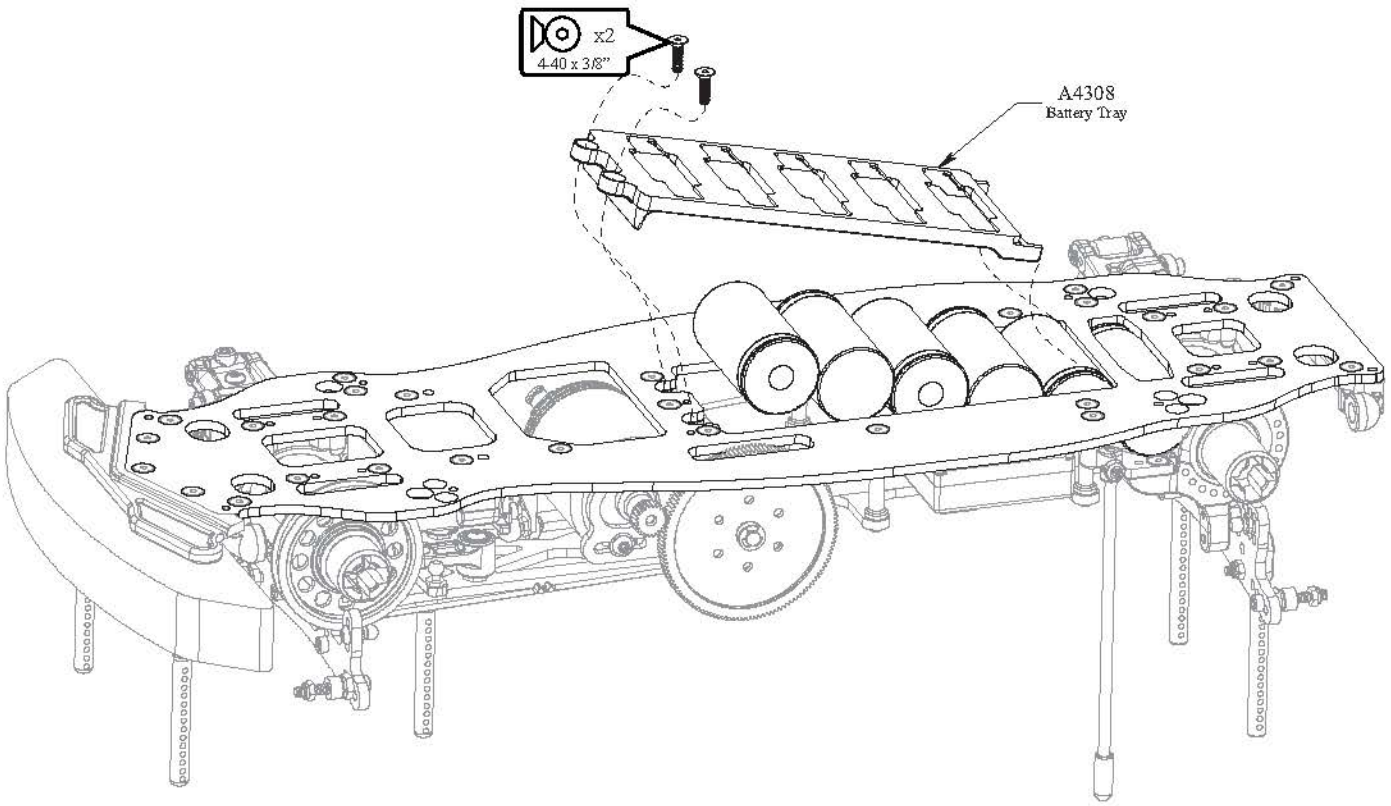

❑ STEP F-07 Wheel and Body Clip Installation

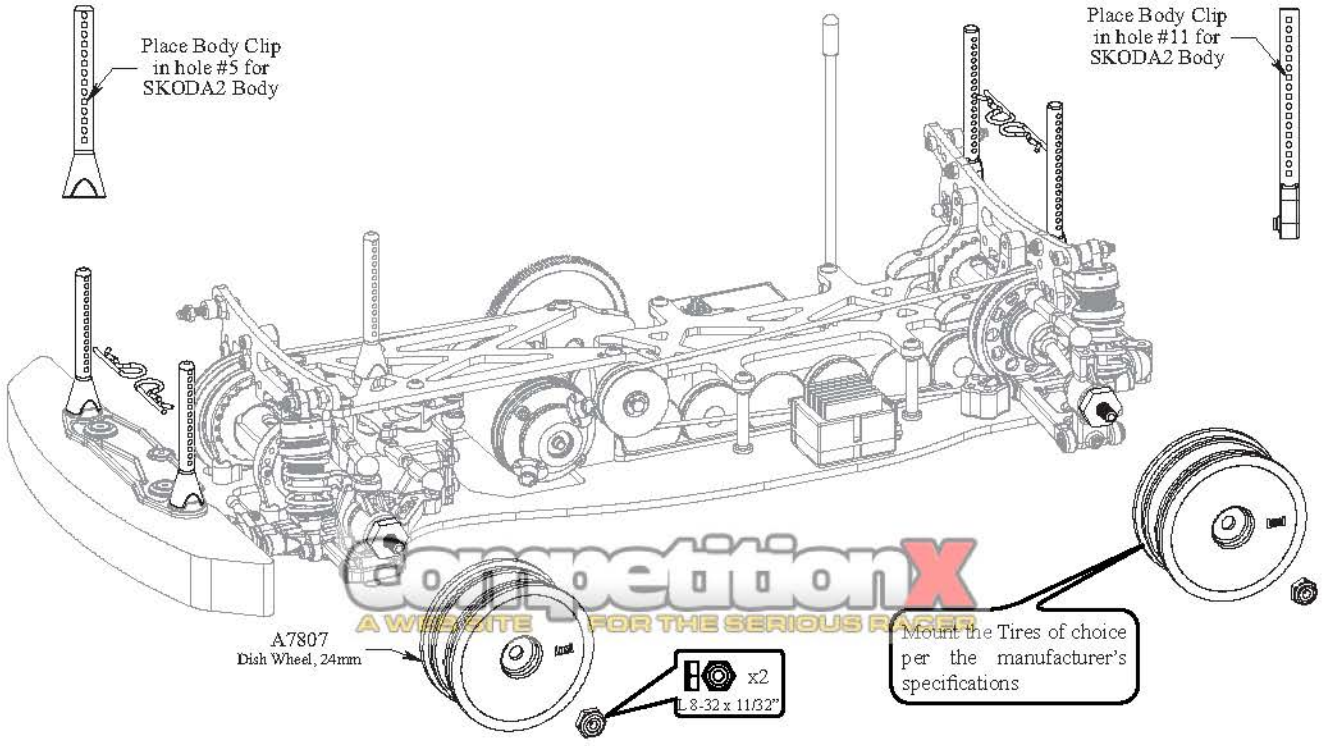

competitionX
A WEBSITE FOR THE SERIOUS RACER

❑ STEP F-08 Body Painting and Mounting

Painting:

Prepare the Lexan® Body and Wing for painting by washing them thoroughly (inside and out) with warm water and liquid detergent. Dry both the Body and Wing with a clean, soft cloth. Use the supplied Window Masks to cover the windows from the inside. A high-quality masking tape should be used on the inside of the Body to mask off any stripes, panels, or designs that you wish to paint on the Body or Wing. Use acrylic lacquer or other paints recommended for Lexan® (polycarbonate). (**NOTE: LEXAN R/C CAR BODIES ARE MEANT TO BE PAINTED FROM THE INSIDE!**) Apply paint to the inside of the Body and to the under-side of the Wing and Winglets. Remove the masking tape for the next color and continue. Try to use darker colors first. If you use a dark color after a light color, apply a coat of white paint over the lighter color before applying the darker color, or if you are painting over white, coat it with silver. This will help prevent the darker color from bleeding through the lighter color.

Mounting:

After painting, trim the Body along the trim lines as shown below, emphasized by the dark shading in the figure below. There is an indented trim line around the Body which can be used as a guide for trimming. Make five 13/64" -diameter holes at the locations marked with dimples. There are two on the front hood, two on the back window and one on the roof. These will be the Body mounting and Antenna holes.

Now trim the rear Wing along the trim lines shown below. Drill two 7/64" diameter holes in the dimples of both the Body and Wing. Cut out and mount the **optional** Winglets using the two 4-40 x 5/16" Aluminum Button Head Screws and nylon 1/4" Nuts as shown below. With the Wing assembled and the Body completely trimmed, mount the wing to the body using two more 4-40 x 5/16" Aluminum Button Head Screws and nylon 1/4" Nuts (shown in Step F-09).

In order to mount the Body, the center Body Post must be cut down, it should be used to support the Body, but not protrude through it or prevent it from sitting easily.

Stickers:

After the Wing and Body are mounted, you can apply the stickers. Cut the stickers from the sticker sheet that you wish to apply to the Body or Wing. Before removing the protective backing, find the desired location. Remove the backing completely and reattach an edge of the sticker to the shiny side of the backing material. Using the rest of the backing material as a handle, position the sticker and press firmly into place to complete its application.

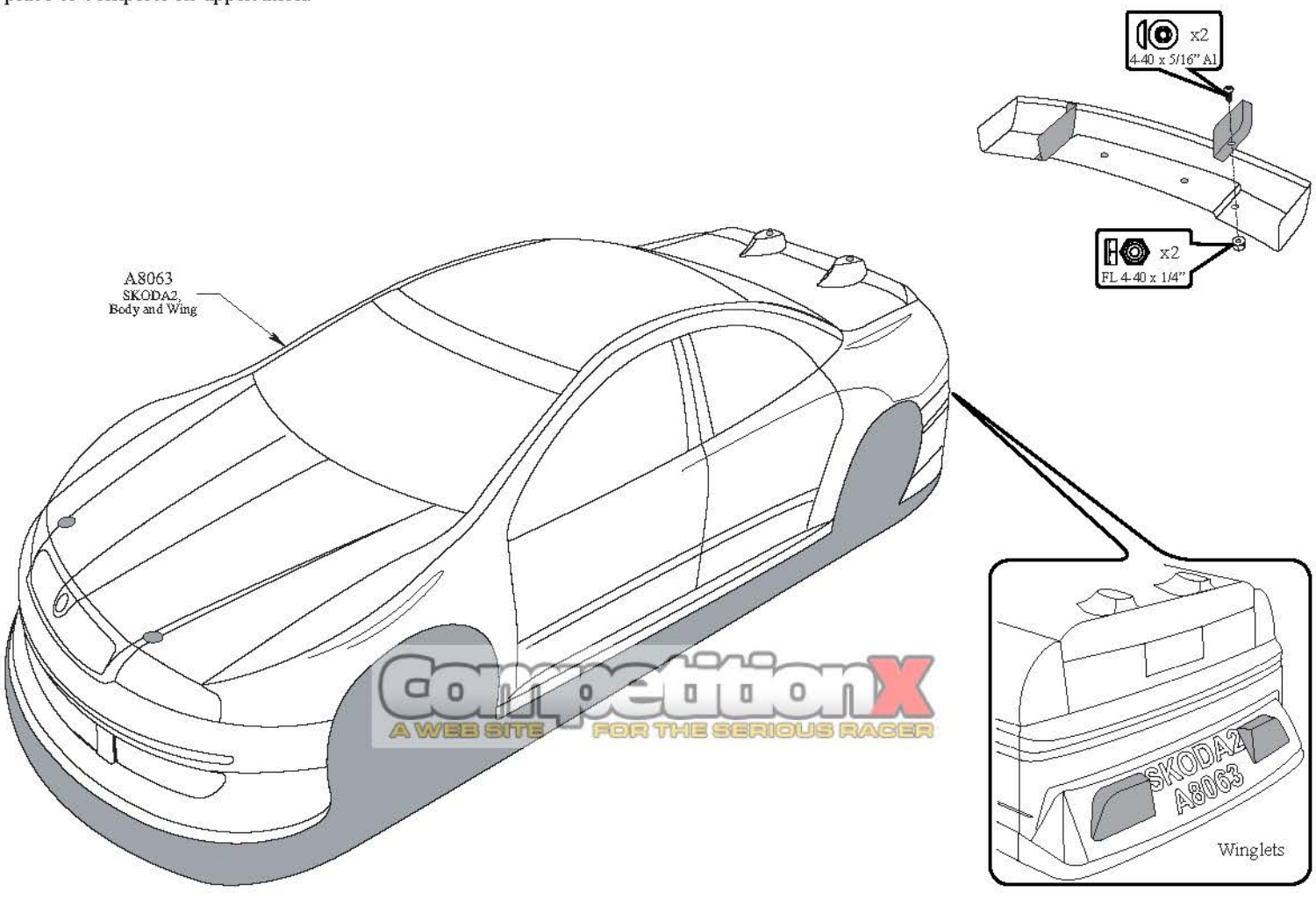

CompetitionX
A WEB SITE FOR THE SERIOUS RACER

❑ STEP F-09

Bag F Completed Assembly

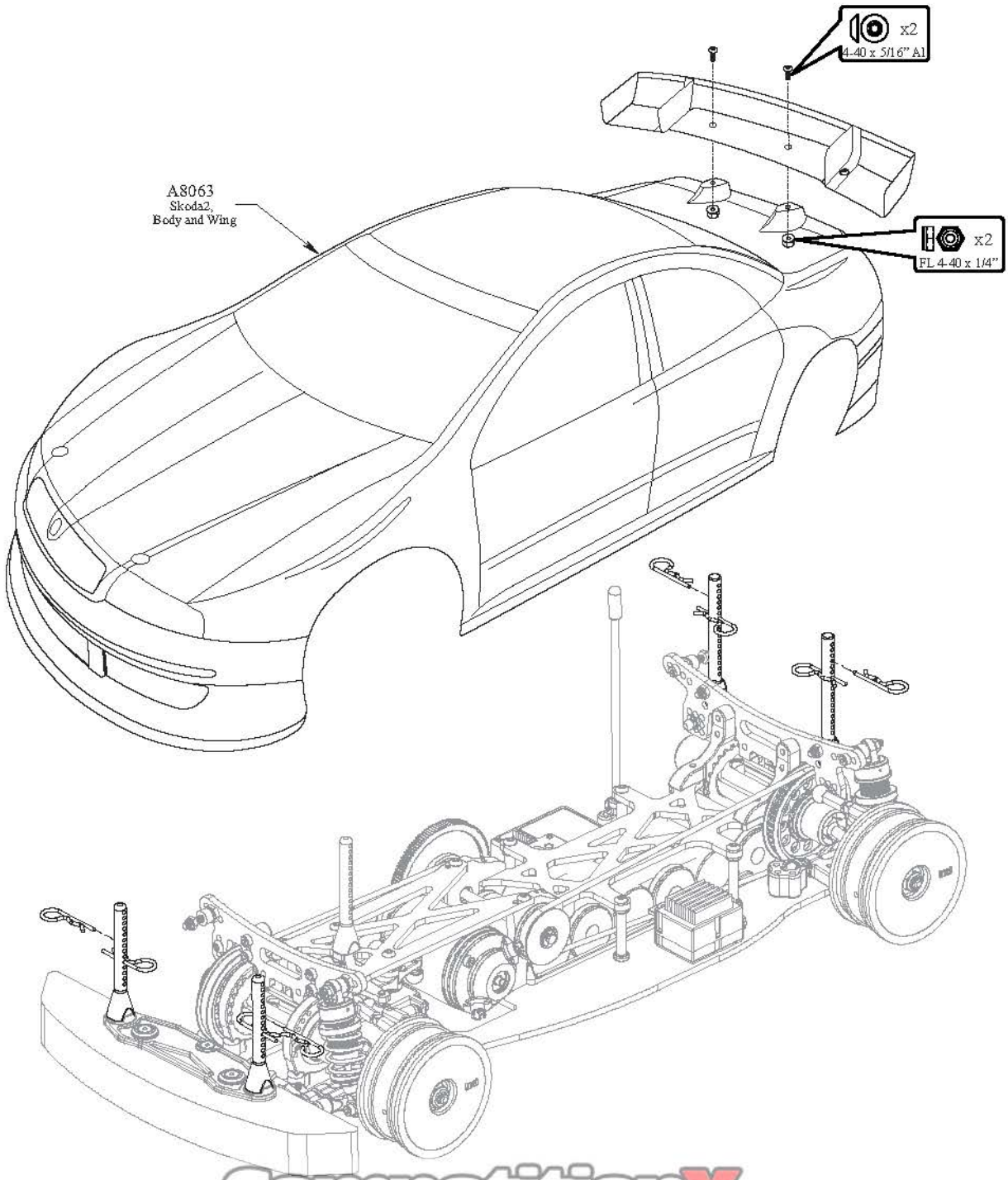

CompetitionX
A WEB SITE FOR THE SERIOUS RACER

BEFORE RUNNING YOUR NEW *JRX-S* EXPERT RACING SEDAN for the first time, you should run down the following checklist in order and complete the listed tasks. We're sure you're anxious to get out and run your new *JRX-S* now that its built, but please note that fine tuning of the initial setup is an essential part of building a high performance racing sedan such as your new *JRX-S*. Following this simple Checklist and the Team Tips will help to make the first run with your new car much more enjoyable.

1. ***Adjust the Differential:***
   While holding the chassis with **only** the left side tires firmly on the ground, give the car about one quarter throttle, for 10 seconds. The right side tires should spin freely during this time. Repeat this with **only** the right side tires held firmly to the ground, allowing the left tires to spin. Feel the differential (diff) action and tighten slightly, if necessary. The differential should have a tight, thick feel when rotating it after final adjustment. ***CAUTION! YOUR DIFFERENTIAL SHOULD NEVER BE ALLOWED TO SLIP WHEN RUNNING (A SLIPPING DIFFERENTIAL CREATES A "BARKING" SOUND). IF IT DOES, STOP IMMEDIATELY AND TIGHTEN TO PREVENT DAMAGE.***
2. ***Check for free suspension movement:***
   All suspension arms and steering components should move freely. Any binds will cause the car to handle poorly.
3. ***Set the ride height:***
   Set the ride height to 5mm by adjusting the shock adjustment nuts, effectively increasing or decreasing pre-load on the springs. See the Setup Guide for additional information on ride height adjustment.
4. ***Set the camber:***
   Adjusting the tierod length changes the camber setting. Using the Team Losi flat wrench to adjust the tierods once installed. Rotating the tierods towards the back end of the vehicle will shorten the length, increasing negative camber. Rotating the tierods towards the front of the car will lengthen them, increasing negative camber. Set the front tires to have 1 degree of negative camber and ensure that they are adjusted equally, left to right. Set the rear tires to have .5-1 degrees of negative camber and ensure that they are adjusted equally, left to right.
5. ***Set the front toe-in:***
   Adjust the front steering tierods so that when the servo is centered on the transmitter, the front tires are both pointing straight. Refer to the Setup Guide for more information on toe-in/out.
6. ***Charge a battery pack:***
   Charge a battery pack as per the battery manufacturer's and/or charger manufacturer's instructions so that radio adjustments can be made. Never plug the battery into the speed control backwards.
7. ***Adjust the electronic speed control (ESC):***
   Following the manufacturer's instructions, adjust your speed control and set the throttle trim on your ESC so that the car does not creep forward when no transmitter input is applied. Make sure that there is not too much brake being applied when the trigger/stick is in the neutral position. Some speed controls have a high/low setting for the throttle and brake.
8. ***Set the transmitter steering and throttle trim:***
   The steering trim tab on the transmitter should be adjusted so that the car rolls straight when you are not touching the steering wheel/stick. If the servo was installed correctly, as per Table 1, the wheels should turn equally to the left and right. If this is not the case, refer to Table 2 and ensure that the steering servo and horn was properly installed. Make sure the throttle trim is set so that the motor does not run when in the neutral position. You may wish to run one "click" of brake to be safe.

TIPS AND HINTS FROM THE TEAM

Before you start making changes on your *JRX-S* Expert Racing Sedan, you need to make a few decisions. Tires, and how they are setup, have a tremendous impact on overall performance. Before you start making changes on the chassis setup, take a movement to observe a few of the fastest cars at the track and what type of tire and inner liner they are running. Also, note the wheel diameter and width, as this can also effect how the tires perform. When making chassis changes, you should first decide where you feel the car needs to be different. This is commonly referred to as changing the "balance". Since the *JRX-S* is a four-wheel drive chassis, you have two ends of the car working separately, yet together. First decide if the front of the car needs to be adjusted or the back. You will want to work with the rear if the car enters the turn with the front end sticking, and tracking well, while the rear end either does not want to follow, or simply doesn't know what it wants to do. The opposite is true if the rear end seems to want to push the front end through the corners or if the front drives into the corner uncontrollably. You will notice that several different adjustments have similar effects on the handling as well. You will find the best adjustment will become a personal decision based on the "feel" that each of these adjustments yield. This also reflects on the "balance" we referred to earlier. Never make more than one change at a time; if the change you made works adversely, or doesn't address your need, return to the previous position and try something else. Team Losi's development team has put hundreds of hours on the *JRX-S* to arrive at the setup we put in the instruction manual. If you find that you have lost the "handle" go back to the kit (stock) setup, as this setup has proven to be reliable, consistent, and easy to drive.

CompetitionX

All of us at Team Losi are sure that you will find the *JRX-S* Expert Racing Sedan to be the most versatile and easiest car to drive fast, with great consistency. We hope the information in the following guide helps you to enjoy your *JRX-S* Sedan, and racing it, as much as we do. For the latest in setup and accessory parts information, visit the Team Losi web site at: ***www.teamlosi.com*** regularly. For any technical questions go to the "Meet the Team" tab on the left side of the page. We will try to answer your questions in the order received, to the best of our knowledge, by our own Team Losi R&D race team. Please check the Team Losi web site periodically to find out new setup information as we are always testing on all types of tracks and surfaces. Also note, that there are many ways to setup a car. The rules we follow can reverse sometimes with different driving styles or different setup styles, so test for yourself and you will find a setup that works right for you.

Motor Gearing: The important thing is to keep the motor in its optimal RPM range as much as possible around the entire track. This will depend on the straight-away length and the size of the infield turns. The chart below is a guide to give you a starting point. You may want to try gearing up (larger pinion or smaller spur) or down (smaller pinion or larger spur), one size at a time, noting the straight-away speed and acceleration through the infield.

****NOTE: OVER GEARING (TOO LARGE OF A PINION OR TOO SMALL OF A SPUR) CAN CAUSE DAMAGE TO BOTH YOUR ELECTRONICS AND MOTOR. USE CAUTION WHEN SELECTING YOUR GEARING.***

Rollout: The overall gear ratio, including the tire diameter, is compared in terms of a distance traveled (usually in mm) per revolution of the motor, called rollout. In foam tire racing, the diameter of the tire is left as an option to the racer (within a given range, set by the sanctioning body) to adjust the way the car handles. When changing the diameter of the tire, the overall gear ratio is effected. The formula below should be used to calculate the rollout of the car for a given tire diameter (d), internal drivetrain ratio (i), spur gear size (s), and pinion gear size (p):

$$Rollout = \frac{(\pi \times d)}{\left(\frac{s}{p} \times i\right)} \quad \text{where} \begin{cases} \pi \approx 3.1416 \\ d = \text{Diameter of Tire } (mm) \\ s = \#\text{ of Teeth on Spur Gear} \\ p = \#\text{ of Teeth on Pinion Gear} \\ i = \text{Internal Drive Ratio (JRX-S=1.83)} \end{cases}$$

For example:

$$\text{If} \begin{cases} \pi \approx 3.1416 \\ d = 57mm \\ s = 128 \\ p = 27 \\ i = 1.83 \end{cases} \text{Then } Rollout = \frac{(3.1416 \times 57mm)}{\left(\frac{128}{27} \times 1.83\right)} = \frac{(179.07mm)}{(8.67)} = 20.6mm$$

Motor Manufacturer, Make/Model		Spur	Pinion	Suggested Rollout
Stock Motor	EPIC Based Monster	128	32-33	25.0mm-27.0mm
	EPIC Based Binary (Two Magnet)	128	32-33	25.0mm-27.0mm
	EPIC Based Binary (Four Magnet)	128	30-31	23.5mm-25.5mm
	EPIC Based P2K/P2K2	128	37-38	28.5mm-30.5mm
	TOP Based (Standard Brush)	128	36-37	28.0mm-30.0mm
	TOP Based (V2)	128	36-37	28.0mm-30.0mm
	Yokomo Based	128	36-37	28.0mm-30.0mm
	All 19 Turn	128	37-40	27.0mm-29.0mm
Modified Motor	7 Turn	128	25-26	18.5mm-19.5mm
	8 Turn	128	26-27	19.5mm-20.5mm
	9 Turn	128	27-28	20.5mm-22.0mm
	10 Turn	128	28-30	22.0mm-23.0mm
	11 Turn	128	30-31	23.0mm-24.0mm
	12 Turn	128	30-32	24.0mm-25.0mm

Table 3: Suggested gearing for the JRX-S Expert Racing Sedan

This example gives a Rollout of 20.6mm, meaning that this car will travel 20.6mm per one revolution of the motor. Opposite of the Spur/Pinion ratio, the higher the Rollout value, the higher the gearing of the car. See Table 3 (above) for suggested starting Rollout values.

Tuning the Front End of the *JRX-S*

Shock Location: The *JRX-S* has three mounting locations on the front shock tower. Leaning the shocks in (moving them closer to the center of the tower) will give a smoother transition as the car enters into the corner and improve consistency but will yield less total steering and a slower reaction. This can be useful on high bite surfaces. Standing the shocks upright (moving them further out from the center of the tower) will increase responsiveness and generate more total steering. This will also increase forward traction and on-power steering. This can be helpful on tight, technical tracks where steering is vital.

Camber Location: The *JRX-S* has three different vertical locations for the front camber tierod. In general, the lower the inside position is, relative to the outside, the more camber gain (total camber change through the total throw of the suspension) is present. Running the camber tierod in the lower hole (more camber gain) will increase both off and on-power steering, however you will lose some consistency. If the inner camber tierod location is raised, the car will lose some steering but gain consistency. We have found that running less camber gain in the front of the car best suits the balance of the *JRX-S*.

Static Camber: This refers to the angle of the wheels/tires relative to the track surface (viewed from either the front or back). Negative camber means that the top of the tire leans in toward the chassis. Positive camber means the top of the tire leans out, away from the chassis. Camber can be precisely measured with after market camber gauges, sold at a local hobby shop. It can be measured (roughly) using any square (to the ground) object by checking the gap between the square edge and the top of the tire. Testing has shown that 1 degree of negative camber is best for most track conditions. Increasing negative camber (in the range of 1-2 degrees) will increase steering for both foam and rubber tire racing. Decreasing negative camber (in the range of 0-1 degree) will decrease steering and the car will feel easier to drive as a result. This is, most often, a very critical adjustment in tuning your car that can be made track-side!

Toe-In/Out: This is the parallel relationship of the front tires to one another. Toe-in/out adjustments are made by changing the overall length of the steering tierods. Toe-in (the front of the tires point inward, to a point in front of the diff) will make the car react a little slower, but have more steering from the middle of the turn, out. The opposite is true with toe-out (the front of the tires point outward, coming to a point behind the front diff), the car will turn into the corner better but with a decrease in steering from the middle of the turn, out. Toe-in will help the car to "track" better on long straights, where as toe-out has a tendency to make the car wander.

Competition Edge X
A WEB SITE FOR THE SERIOUS RACER

Bump-In/Out: Bump-out (front of the front tires toe-outward under suspension compression) will result in more off-power steering. This effect is obtained by adding washers under the steering spindle ball stud. Bump-In (front of the front tires toe-inward under suspension compression) will result in less off-power steering and running too much bump-in can make the steering feel very inconsistent. This effect is obtained by installing the steering draglink on the bottom of the steering bellcranks, with the ball stud pointing upward. Testing has shown that running zero bump steer (kit setup) in the *JRX-S* offers the best overall setup.

Front Droop: Droop is the amount of down-travel that the suspension has. It is adjusted with the set screw from the top of the arm. Droop is easily measured by removing the front tires and setting the chassis on the droop gauge (included) so that the gauge extends across the chassis from the center, out to the arm with the graduated notches to one side. Slide the gauge inward using the set screw boss on the bottom of the spindle carrier as a reference. The set screw boss should just clear the 3mm (minimum) step on the droop gauge. Repeat this for the other side, making sure that both sides are the same. With standard 2.5" tall tires you will want to maintain between 3-5mm of droop. Less droop makes the chassis react quicker but is not as good on bumpy tracks. More droop reduces steering into a turn and slows down the overall reaction of the chassis as well as making the chassis more stable on bumpy surfaces.

Up-travel Limiters: The up-travel of the shocks can be adjusted via the setscrew in the sway bar mount/up-travel stop (attached to each of the arms). With the chassis pushed down onto a flat surface (suspension compressed), pull up on the front or rear tires. This is the up-travel of the car. More up-travel is recommended for bumpy surfaces or track layouts that use berm edging or track dots. This will allow the suspension to work over those objects. Testing has shown that 3-5mm of tire up-travel for this type of track conditions is best. For smooth track layouts that are high bite, testing showed that limiting the up-travel helps the car react faster and improves corner speed.

Kickup/Anti-dive: This is the angle of the inner front hinge pins in relation to the chassis. The amount of kickup/anti-dive is controlled with shims (one .035" shim per degree) under the pivot blocks that mount the inner hinge pins and suspension arms to the chassis. For kickup, the shims will be placed under the pivot block in front of the arms. For anti-dive, the shims will be placed under the pivot blocks directly behind the front arms. Front kick-up generally makes the car easier to drive, especially on bumpy tracks, and will give more steering entering a turn. However, you will loose on-power (exit) steering. Anti-dive will make the steering feel more aggressive initially, and deliver more on-power steering. Anti-dive will also improve 'braking traction' but will reduce the chassis' ability to handle bumpy surfaces.

Caster: This is the angle of the kingpin from vertical when viewed from the side of the car. The *JRX-S* comes equipped with 4-degree spindle carriers, however, this can be adjusted from 0-8 degrees with aftermarket carriers. Total caster is determined by adding the amount of kickup/anti-dive and the kingpin angle of the front spindle carriers. On asphalt, increasing total caster will provide more steering entering a turn but less on exit. Decreasing total caster will cause the steering to react faster and increase on-power steering. For carpet/foam tire racing, decreasing total caster will cause the car to react faster off-center and decrease on-power steering. Increasing total caster will cause the car to be smoother off-center and provide more total steering. Testing has shown that the 6 degree carriers perform best for this type of racing.

Inboard Pin Angle: The inboard angle of the front hinge pins is adjustable in 1 degree increments from 0 to +2 degrees (angled out). The car comes stock with a 1 degree front pivot. The kit also includes the 0 and +2 degree blocks for adjustment. Running less inboard front toe (0 degree) will result in more stability by decreasing steering into a turn. Increasing inboard front toe (+2 degrees) will provide more aggressive feel to the steering.

Front Drive: The *JRX-S* comes with a front differential, however, the front drive can be changed to an optional one-way or spool (using special spool pads in place of the diff balls to create a locked differential). A front diff will give you the most consistent feel and provide more off-power steering while sacrificing a little forward drive. One-way's are used on high traction asphalt and carpet tracks that are flowing with no hairpin turns. A one-way lets the front tires "free wheel" individually for greater steering when you let off the throttle, and becomes a solid axle when power is applied. By creating a solid front axle, the one-way increases acceleration compared to a diff. A one-way has no front braking ability so all braking is done at the rear, which can be difficult. A spool is a locked front axle and has the best of both one-way and diff characteristics. The use of a spool allows precise off-power braking while maintaining the benefits of solid axle acceleration on-power. The front of the *JRX-S* is equipped with the new Team Losi LCD (Losi Constant Drive, Patent Pending) axles. The front drive axles were designed exclusively for spool type racing to eliminate the chatter that spools cause at high steering angles. Be sure to use these for all types of racing since they will greatly enhance steering and overall handling of your *JRX-S*.

Tuning the Rear End of the *JRX-S*

Toe-In: Having the same definition as for the front end, the toe-in can be adjusted on the *JRX-S* with either the rear outer pivot or the rear hubs. The stock toe-in is 2 degrees of inboard and 0 degrees in the hub. Increasing rear toe-in will increase forward traction and initial steering, but reduce straightaway speed. Decreasing rear toe-in will decrease forward traction and "free-up" the car. Less toe-in can be used for stock racing to gain top speed.

Inboard Pin Angle: Placing all of the toe-in inboard will cause the weight to transfer to the front end easily, increasing off-power steering and decreasing on-power steering (more forward traction). Placing all of the toe-in in the hubs will stabilize the weight transfer, providing less initial steering entering a turn, and less forward traction.

Camber Location: The *JRX-S* has multiple rear camber locations. Using a longer camber link will improve stability and traction (grip). Using a shorter camber link will increase steering while decreasing rear grip. Running the camber link in the inside position (A) on the hub will generate more rotation entering a turn, but decrease steering on exit. Running the camber link in the outer position (B) on the hub will generate more stability entering a turn and increase steering on exit. Testing has shown that running the inboard rear camber ball stud in a higher location (less angle relative to arm = less camber gain) on high traction surfaces offers improved stability with decreased rear grip. Also, on low traction surfaces, running the inboard rear camber ball stud in a lower location (more angle relative to arm = more camber gain) will increase rear grip.

A WEB SITE FOR THE SERIOUS RACER

Static Camber: Having the same definition as for the front end and measured in the same fashion, rear camber can also be a critical tuning feature. Testing has shown that running a small amount of negative camber (.5-1 degree) is best. Increasing negative rear camber (in the range of 1.5-3 degrees) will increase stability and traction in corners, but decrease high speed stability. Decreasing rear camber (in the range of 0-1.5

degrees) will decrease stability and traction in corners, but will increase high speed stability.

Shock Location: Leaning the top of the shocks inward on the tower will provide less forward traction and more rotation in a corner. Moving the top of the shocks outward on the tower will provide less rotation in a corner and the car will become more responsive with increased forward traction. Moving the bottom of the shock to the inside of the arm will result in more forward and side traction (side bite). Running the shocks in the outside hole in the arm will provide more on-power steering with less forward traction. In general, when changing shock locations on the arm, it will be necessary to go up one spring rate when moving in on the arm and vice-versa.

Anti/Pro-Squat: In the stock configuration, the *JRX-S* has no squat. Anti-squat is generated by raising the inner pivot blocks, relative to the outer pivot. This will increase initial steering and forward traction. Pro-squat is generated by raising the outer rear pivot relative to the inner pivots. This will decrease forward traction and initial steering, but provide more on-power steering. Either pro-squat or anti-squat can be increased in 1 degree increments using .035" roll center shims, supplied in the kit.

Rear Droop: This is adjusted and measured in the same fashion as the front droop, but use the bottom of the hub carrier, instead of the set screw boss, for a reference. Testing has shown that 4mm of rear droop is a good starting point. More droop will result in smoother chassis reaction and more rear grip. Less droop will react faster and possibly become a little abrupt.

Rear Hub Location: The *JRX-S* comes standard with a long rear arm setting. Testing has shown this to offer the best, and most consistent, setup from track to track. The optional offset hubs, short rear arm setting, (LOSA9854 (0-Degree), LOSA9855 (½-Degree), and LOSA9856 (1-Degree)) offer more steering and have been extremely useful on carpet/foam tire racing.

Tuning the Chassis of the *JRX-S*

Center Drive: The *JRX-S* comes with the option of a center one-way or a spool center drive. Similar to using an optional front one-way, braking will only occur with rear wheels. A center one-way will enhance the off-power affects of a front one-way by providing more total steering. A spool center drive will give you less total steering and greater braking ability. Generally, the center one-way is used in combination with a front one-way or front diff setup, when a lot of steering is desired. In the same respect, a spool center drive is generally used in combination with a front spool, both used commonly with foam tire/carpet racing.

Arm Spacing: The *JRX-S* has options for changing the wheelbase by moving the front and/or rear suspension arms forward and back. Moving the .0625" shims in front or behind the arms changes the wheelbase. A longer wheelbase will provide a smooth feeling setup. A shorter wheelbase will provide an aggressive steering setup. Additionally, moving the rear arms forward/back will increase/decrease rear traction.

Roll Center: The roll centers of the *JRX-S* can be easily adjusted by flipping the pivot blocks (that came with the kit) and/or by adding equal shims under the inner and outer pivots. The stock setup utilizes high roll centers without shims. Testing has shown that high roll centers were the best suited for rubber tire racing. A higher roll center will keep the car from rolling (leaning), making the car react faster and have more traction. A low roll center allows the car to roll more and react slower, reducing responsiveness in and out of turns. Testing has also shown that low roll centers are best suited for carpet/foam tire racing. There is a .110" of pin height difference between high and low roll center. The front and rear can be adjusted unequally to obtain the best overall balance at your track.

Diff Height: **Caution! When adjusting the differential heights, rotate the acentrics as to loosen the belts, rotating in the opposite direction, with the belts installed can severely damage the belts.** Diff heights in the *JRX-S* are also adjustable by rotating the acentrics that positions them. The diffs can be adjusted from a full low position to a full high position. The low position will allow the car to roll more and keep the car in a turn longer, increasing on-power steering. The high diff position will give the car a flatter and more responsive feel. It is also possible to change the balance of the car quite drastically by offsetting the height of the diffs from front to rear. Testing has shown that maximum total steering can be obtained by running the front diff low and the rear diff high. For less total steering do the opposite. For less overall traction run the front and rear diffs in the low position. For more overall traction, do the opposite.

Belt Tension: The acentrics have multiple adjustment positions. Testing has shown that the best setting for the belt tension is to have is 3mm of vertical play. Simply move the belt up and down with your fingers and adjust the diff acentrics to get the desired setting. **Be careful to only insert the screw where the holes in the bulkhead and the acentric are aligned, after setting the tension (per vertical play).**

Shock Tower Height: The shock tower heights are vertically adjustable by .140", providing a low (stock) and a high position. The lower position is most often run since it offers the best overall balance. Running the tower in the raised position offers different shock and camber locations to obtain less camber gain and change the shock mounting geometry. This adjustment can be used when raising and lowering the roll center, to keep the camber links and shock mounting locations consistent from high to low.

Ride Height: This is the height of the chassis in relation to the surface of the track. A higher (stock is 5mm) ride height may be used on bumpy or slick surfaces, improving overall handling by generating more weight transfer and chassis roll. A lower ride height will make the car change direction quicker and should be helpful on high traction surfaces such as carpet. Testing has also shown that offsetting the ride height, front to rear (running the rear ride height ½ mm higher than the front) will increase steering entering a turn.

CompetitionX A WEB SITE FOR THE SERIOUS RACER

Over/Under-Drive: The *JRX-S* is capable of utilizing overdrive (make the front tires turn faster than the rear) or under-drive (make the front tires turn slower than the rear). Using a 41T pulley in the front of the car will give it overdrive. This will give the car more steering. Using the 41T pulley in the back of the car will give it under-drive. We have found this to be useful when less steering is needed. Under-drive will also help the car accelerate through bumps better. It is also possible to run a 41T pulley in the front and back, but it is not recommended. **Note: If the pulleys become mixed up, they can be distinguished by a ridge, located in the flange on the 42T pulley. The 41T pulley does not have any type of marking on the flange area.*

SETUP SHEET

Name:	Date: Event:
City: State:	Track:
Country:	Qualified: Finish:
E-mail:	Best Lap Time / sec : Avg. Lap Time / sec :
Phone:	Note:

Track Conditions

Time : am pm	Air Temp °F or °C	Track Temp °F or °C
❑ Indoor ❑ Outdoor	❑ Tight ❑ Open	Race Length (min)
❑ Asphalt ❑ Carpet ❑ Concrete	❑ Sealed ❑ Smooth ❑ Rough	❑ Low Bite ❑ Med Bite ❑ High Bite

Front Suspension

Toe ❑ In ❑ Out ____ ° Camber ❑ − ❑ + ____ °

Ride Height ____ mm

❑ Kick Small (.035) shim= 1° — Caster — ❑ Anti-Dive Small (.035) shim= 1°

____ # Shims ____ # Shims

Front Shocks

Oil: ____
Brand: ____
Piston: ____ ❑STD Drilled
O-rings: ❑ x1 ❑ x2
Spring: ____
Bladder: ____
Above Bladder: ____

Length

Pulley
❑ 42F/42F *STD*
❑ 41F/42R *OD*
❑ 42R/41R *UD*

Front Drive
❑ Diff
❑ One-way
❑ Spool

Diff Height
❑ High ❑ Low

Sway Bars
❑ Yes ❑ No
Size ____

Front Pivot
❑ 0° ❑ 1° ❑ 2°

Roll Center
❑ High ❑ Low
#of shims ____ under block
Size of shim ____

Shock Tower Height
❑ High ❑ Low

Center Drive
❑ Spool
❑ One-way

Drag Link
# of washers ____ under ball stud
Washer size ____
❑ Below ❑ Above

Drive Shaft
❑ Pin
❑ Bearing

Ball Stud Neck
❑ ❑ ❑
Tall Short

Washers under Ball Stud
____ Size ____

Hex Width
❑ Standard
❑ Other
____ mm

Drive Axle
❑ LCD
❑ CVD

Droop Height ____ mm

Ackerman
❑ 2 ❑ 1

Arm Spacing
❑ Forward
❑ Middle
❑ Back

Bump Steer
# of washers under spindle ____
Size of Washers ____

Notes: ____

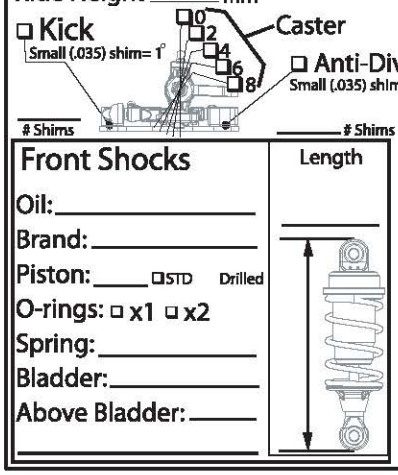

Rear Suspension

Toe ❑ In ❑ Out ____ °

Ride Height ____ mm

Camber ❑ − ❑ + ____ °

Hub ❑ 0° ❑ 1° ❑ 3° ❑ 1/2° ❑ 2° ❑ 4°

Rear Shocks

Oil: ____
Brand: ____
Piston: ____ ❑STD ❑Drilled
O-rings: ❑ x1 ❑ x2
Spring: ____
Bladder: ____
Above Bladder: ____

Length

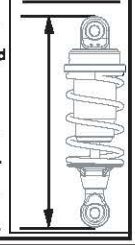

Washers under Ball Stud
____ Size ____

Ball Stud Neck
❑ ❑
Tall Short

Drive Axle
❑ LCD
❑ CVD

Hex Width
❑ Standard
❑ Other
____ mm

Shock Tower Height
❑ High ❑ Low

Drive Shaft
❑ Pin
❑ Bearing

Diff Height
❑ High ❑ Low

Sway Bars
❑ Yes ❑ No
Size ____

Rear Pivot
❑ 0° ❑ 1° ❑ 2°
❑ -1° ❑ -2°

Roll Center
❑ High ❑ Low
#of shims ____ under block
Size of shim ____

❑ Standard
❑ Off-set

❑ Outside
❑ Inside

Droop Height ____ mm

Anti-Squat
Shim Size ____

Pro-Squat
Shim Size ____

Arm Spacing
❑ Forward
❑ Middle
❑ Back

Notes: ____

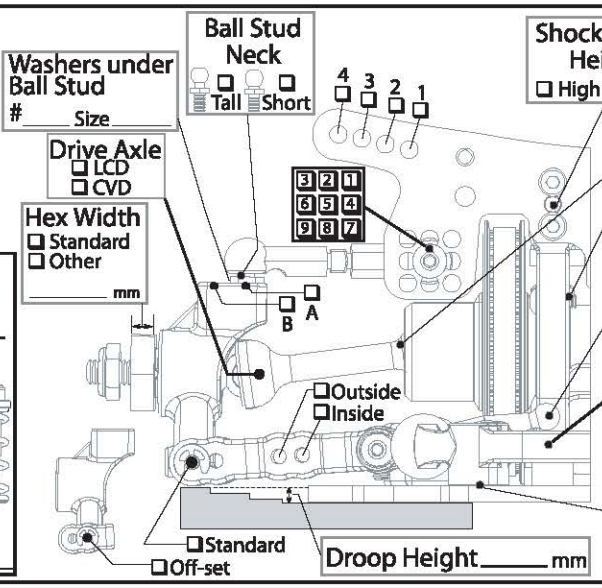

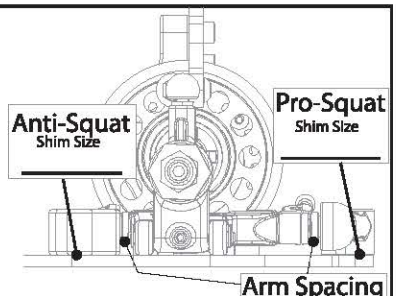

Body ____	Motor ____	Spur Gear ____	Servo ____
Wing ____	Turns ____	Pinion Gear ____	ESC ____
FR Body Hole ____	Brushes ____	Spur ÷ Pinion= ____ (Ratio)	Receiver ____
RR Body Hole ____	Springs ____	S/P x 1.83 = ____ (Ratio)	Battery ____
5th Body Hole ____	Timing ____	Roll Out ____	Transponder Location ____
Body Height ____			

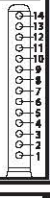

Weight Placement

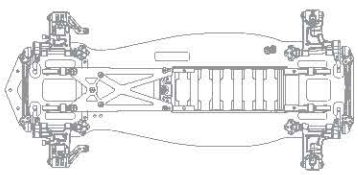

Vehicle Weight

Tires:	Brand/Compound	Size (mm)	Insert	Wheel	Additive	Tire Warmers
Front:						❑ YES ❑ NO Temp °F or °C
Rear:						

CompetitionX A WEB SITE FOR THE SERIOUS RACER

NOTES: ____

HARDWARE

Cap Head

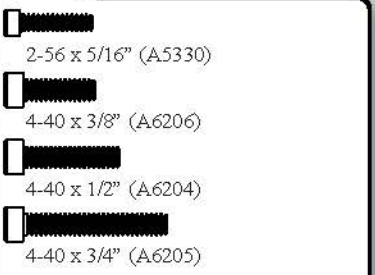

2-56 x 5/16" (A5330)
4-40 x 3/8" (A6206)
4-40 x 1/2" (A6204)
4-40 x 3/4" (A6205)

Flat Head

2-56 x 3/16" (A6239)
4-40 x 3/8" (A6210)
4-40 x 1/2" (A6220)

Button Head

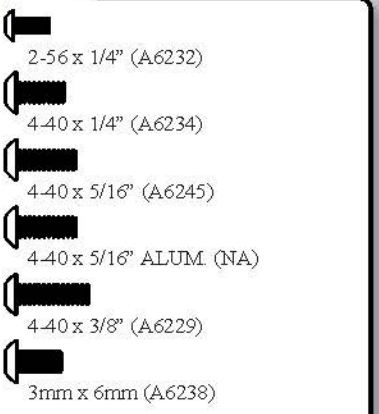

2-56 x 1/4" (A6232)
4-40 x 1/4" (A6234)
4-40 x 5/16" (A6245)
4-40 x 5/16" ALUM. (NA)
4-40 x 3/8" (A6229)
3mm x 6mm (A6238)

Set

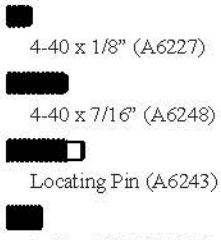

4-40 x 1/8" (A6227)
4-40 x 7/16" (A6248)
Locating Pin (A6243)
5-40 x 3/16" (A9757)

Ball Studs

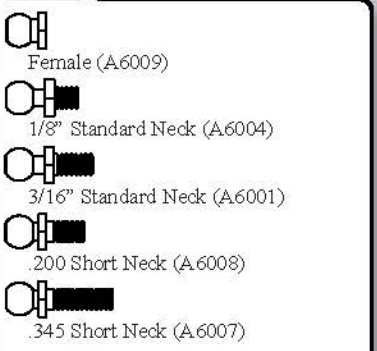

Female (A6009)
1/8" Standard Neck (A6004)
3/16" Standard Neck (A6001)
.200 Short Neck (A6008)
.345 Short Neck (A6007)

Washers

#4 x .030 (Gold) (A6350)
Belleville (A2909)

Metal Shims

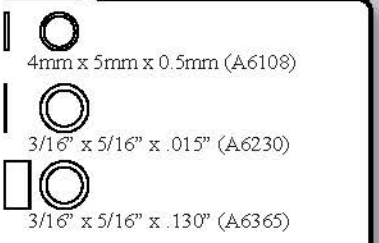

4mm x 5mm x 0.5mm (A6108)
3/16" x 5/16" x .015" (A6230)
3/16" x 5/16" x .130" (A6365)

Plastic Spacers

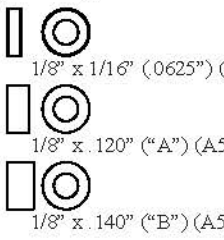

1/8" x 1/16" (.0625") (A2127)
1/8" x .120" ("A") (A5321)
1/8" x .140" ("B") (A5321)

Ball Bearings

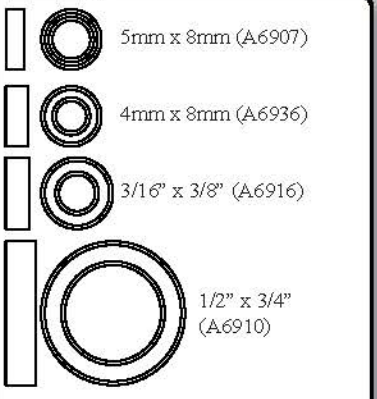

5mm x 8mm (A6907)
4mm x 8mm (A6936)
3/16" x 3/8" (A6916)
1/2" x 3/4" (A6910)

Roll/Solid Pins

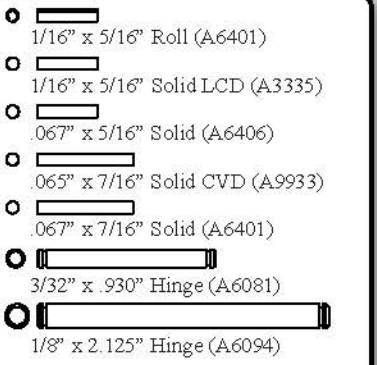

1/16" x 5/16" Roll (A6401)
1/16" x 5/16" Solid LCD (A3335)
.067" x 5/16" Solid (A6406)
.065" x 7/16" Solid CVD (A9933)
.067" x 7/16" Solid (A6401)
3/32" x .930" Hinge (A6081)
1/8" x 2.125" Hinge (A6094)

E/C-Clips

4mm C-Clip (A6108)
3/32" E-Clip (A6103)
4mm E-Clip (A6106)

Nuts (Lock/Plain)

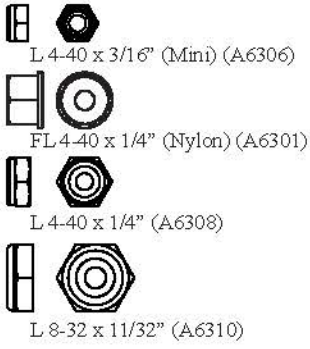

L 4-40 x 3/16" (Mini) (A6306)
FL 4-40 x 1/4" (Nylon) (A6301)
L 4-40 x 1/4" (A6308)
L 8-32 x 11/32" (A6310)

DETAIL ICON REFERENCE KEY

1 These numbers are used to identify the critical order in which assembly must occur. *Note: They will not call out every part of the step.

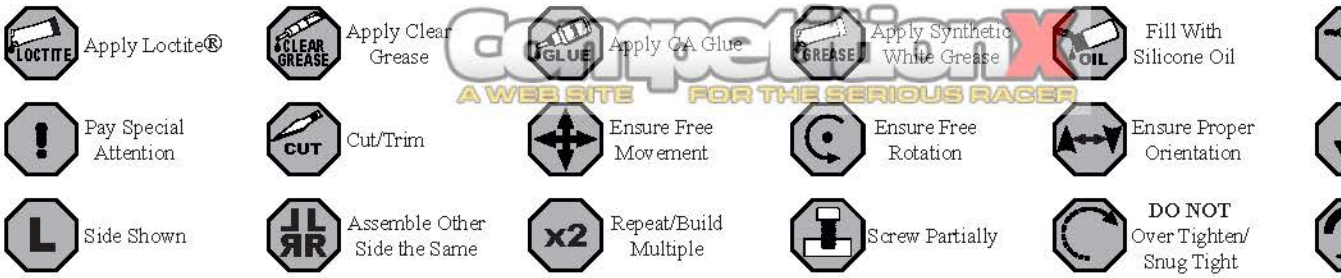

CompetitionX
A WEB SITE FOR THE SERIOUS RACER

STANDARD SETUP

Name:	Date: Event:	Track Conditions: Time : am pm / Air Temp °F or °C / Track Temp °F or °C
City: State:	Track:	☐ Indoor ☐ Outdoor / ☐ Tight ☐ Open / Race Length (min)
Country:	Qualified: Finish:	☐ Asphalt ☐ Carpet ☐ Concrete / ☐ Sealed ☐ Smooth ☐ Rough / ☐ Low Bite ☐ Med Bite ☐ High Bite
E-mail:	Best Lap Time / sec : Avg. Lap Time / sec :	
Phone:	Note:	

Front Suspension

Toe ☐ In ☐ Out 0 ° Camber ☑ − ☐ + 1 °

Ride Height 5 mm

☐ Kick — Small (.035) shim= 1° — 0 # Shims

Caster

☐ Anti-Dive — Small (.035) shim= 1° — 0 # Shims

Pulley: ☑ 42F/42F *STD* ☐ 41F/42R *OD* ☐ 42R/41R *UD*

Shock Tower Height: ☐ High ☑ Low

Center Drive: ☑ Spool ☐ One-way

Front Drive: ☑ Diff ☐ One-way ☐ Spool

Diff Height: ☐ High ☑ Low

Sway Bars: ☐ Yes ☑ No — Size

Front Pivot: ☐ 0° ☑ 1° ☐ 2°

Roll Center: ☑ High ☐ Low — 0 #of shims under block — 0 Size of shim

Drag Link: 0 # of washers under ball stud — 0 Washer size — ☐ Below ☑ Above

Drive Shaft: ☑ Pin ☐ Bearing

Ball Stud Neck: ☐ ☐ ☑ — Tall Short

Ackerman: ☐ 2 ☑ 1

Washers under Ball Stud: # 0 Size

Arm Spacing: ☐ Forward ☑ Middle ☐ Back

Bump Steer: 0 # of washers under spindle — 0 Size of Washers

Hex Width: ☑ Standard ☐ Other — mm

Drive Axle: ☑ LCD ☐ CVD

Droop Height 3 mm

Notes:

Front Shocks

Length	
Oil:	40
Brand:	Losi
Piston:	60 ☑ STD ☐ Drilled
O-rings:	☑ x1 ☐ x2
Spring:	35 lb
Bladder:	Losi
Above Bladder:	0

Rear Suspension

Toe ☑ In ☐ Out 2 °

Ride Height 5 mm

Camber ☑ − ☐ + 1 °

Hub ☑ 0° ☐ 1° ☐ 3° ☐ 1/2° ☐ 2° ☐ 4°

Ball Stud Neck: ☐ Tall ☑ Short

Washers under Ball Stud: # 0 Size

Drive Axle: ☐ LCD ☑ CVD

Hex Width: ☑ Standard ☐ Other — mm

Shock Tower Height: ☐ High ☑ Low

Drive Shaft: ☑ Pin ☐ Bearing

Diff Height: ☑ High ☐ Low

Sway Bars: ☐ Yes ☑ No — Size

Rear Pivot: ☐ 0° ☐ 1° ☑ 2° ☐ -1° ☐ -2°

Roll Center: ☑ High ☐ Low — #of shims under block — Size of shim

☑ Outside ☐ Inside

☑ Standard ☐ Off-set

Droop Height 5 mm

Anti-Squat Shim Size 0

Pro-Squat Shim Size 0

Arm Spacing: ☐ Forward ☑ Middle ☐ Back

Notes:

Rear Shocks

Length	
Oil:	40
Brand:	Losi
Piston:	57 ☑ STD ☐ Drilled
O-rings:	☑ x1 ☐ x2
Spring:	12.5 lb
Bladder:	Losi
Above Bladder:	0

Body: Skoda 2	Motor:	Spur Gear: 128	Servo:
Wing: Skoda 2	Turns:	Pinion Gear:	ESC:
FR Body Hole: 5	Brushes:	Spur ÷ Pinion= (Ratio)	Receiver:
RR Body Hole: 11	Springs:	S/P x 1.83 = (Ratio)	Battery:
5th Body Hole:	Timing:	Roll Out:	Transponder Location:
Body Height: 115mm			

Weight Placement

Vehicle Weight

Tires: Brand/Compound — Size (mm) — Insert — Wheel — Additive — Tire Warmers

Front:

Rear:

☐ YES ☐ NO — Temp °F or °C

CompetitionX A WEB SITE FOR THE SERIOUS RACER

NOTES:

JRS

1/10th Scale Expert Racing Sedan

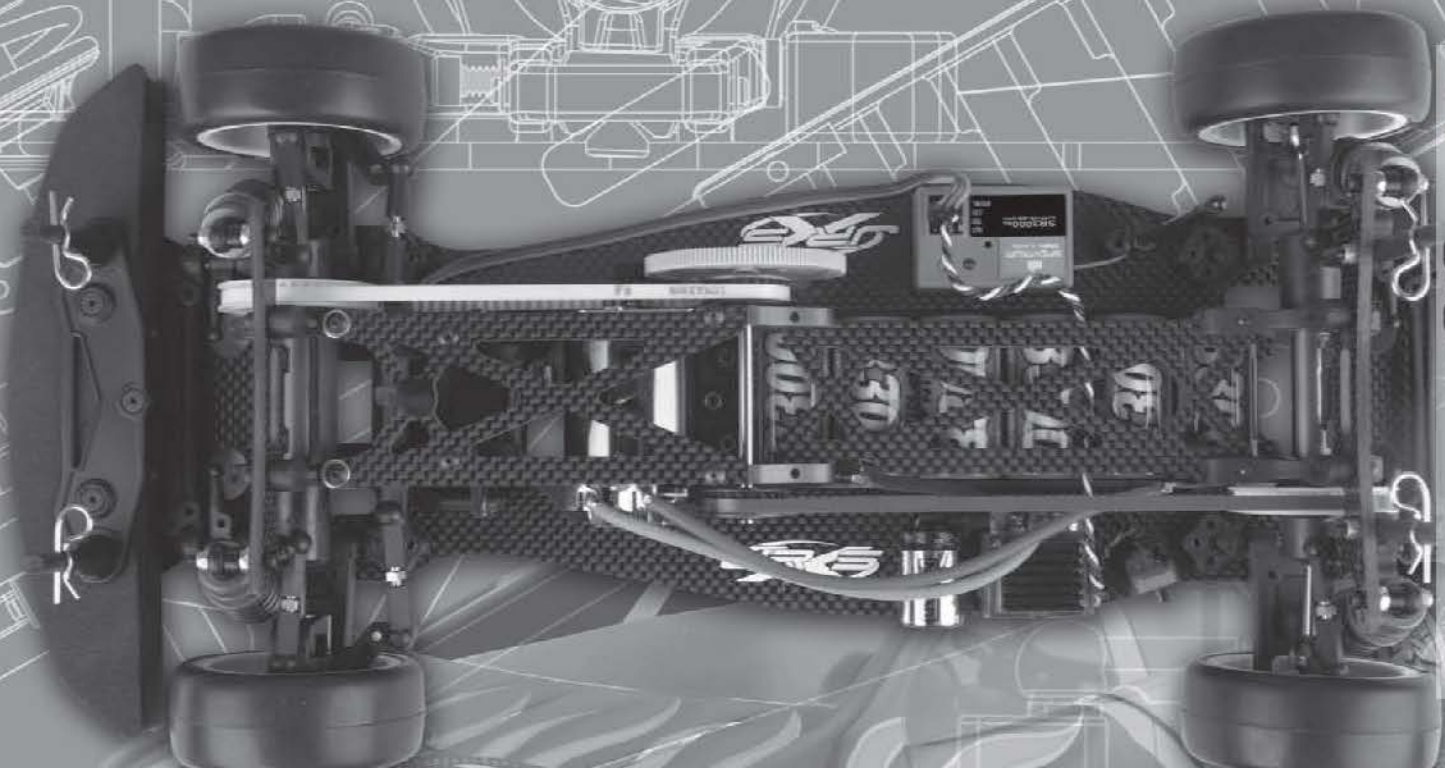

competitionX

A WEB SITE FOR THE SERIOUS RACER

TEAM LOSI

ALWAYS RACING TOWARDS THE FUTURE.

2-1-2005
J.C. M.L R.T
200-0246