SETUP SHEET

Name: | Date: | Event:

City: | State: | Track:

Track Conditions: ❑ Indoor ❑ Outdoor ❑ Tight ❑ Open ❑ Smooth ❑ Rough ❑ Hard Packed ❑ Loose/Loamy ❑ Blue Groove ❑ Dry ❑ Wet ❑ Dusty ❑ Low Bite ❑ Med Bite ❑ High Bite ❑ Other _____

Front Suspension

Toe: _____
Ride Height: _____
Camber: _____
Caster: _____
Sway Bar: _____
Piston/Oil: _____
Spring: _____
Limiter/Droop: _____
Overall Shock Length: _____
Steering Ackerman: _____
Bump Steer: _____
Camber Link: _____
Shock Location: _____
Front Diff Fluid: _____
Receiver Battery Type: _____

Center Diff Fluid: _____

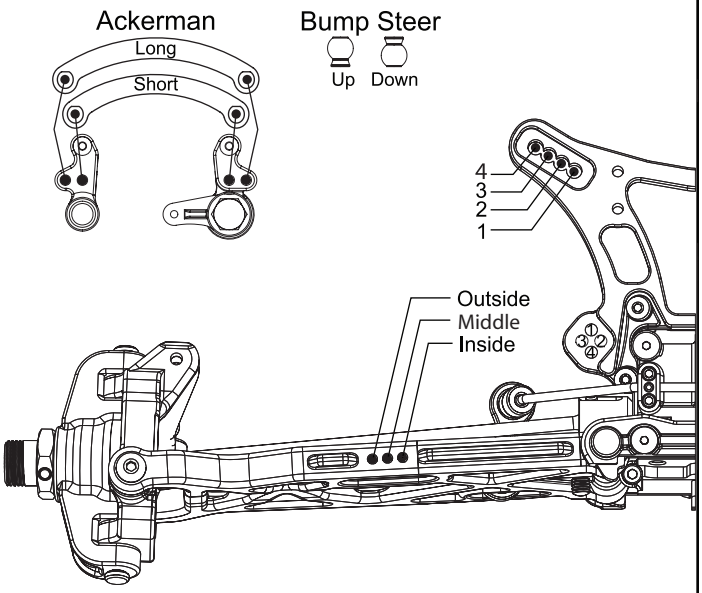

Notes: _____

Rear Suspension

Toe: _____
Anti-Squat: _____
Ride Height: _____
Camber: _____
Rear Hub Spacing: _____
Sway Bar: _____
Piston/Oil: _____
Spring: _____
Limiter/Droop: _____
Overall Shock Length: _____
Camber Link: _____
Shock Location: _____
Rear Diff Fluid: _____

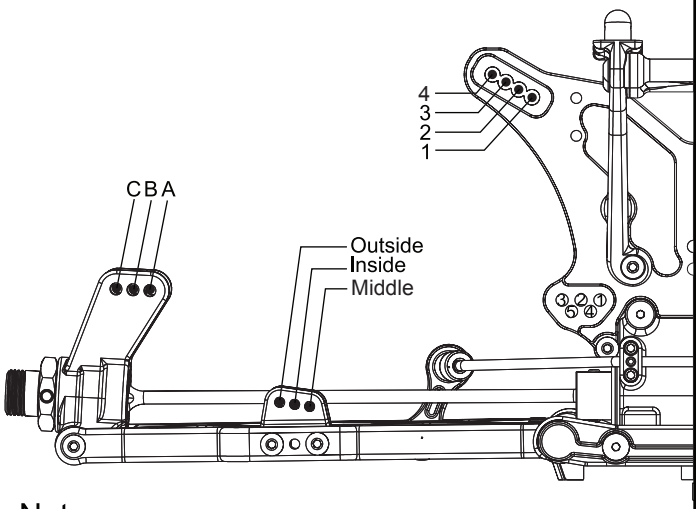

Notes: _____

Engine

Engine: _____ Fuel: _____
Glow Plug: _____ Head Clearance: _____
Pipe/Header: _____ Gearing: _____

Clutch

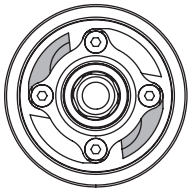

Clutch Shoes and Springs Info

_____
_____
_____

Tires

	Type	Compound	Insert
Front:			
Rear:			

Notes: _____